northwest Clean Air agency

Serving Island, San Juan, Skagit and Whatcom Counties

Statement of Basis for the Air Operating Permit AOP 013R2M1

Tesoro Refining & Marketing Company LLC Anacortes Refinery

Anacortes, WA

September 25, 2026

PERMIT INFORMATION

Tesoro Refining & Marketing Company LLC
Anacortes Refinery
10200 West March Point Road, Anacortes, WA 98221

Responsible Official
Robert Atkinson
Vice President
Anacortes Refinery
(360) 293-9119

Inspection Contact
Monica Bohnert
Environmental Supervisor
(360) 293-9119

Northwest Clean Air Agency
1600 South Second Street
Mount Vernon, WA 98273-5202
(360) 428-1617

Prepared by
Crystal Rau
Air Quality Scientist
(360) 428-1617 x 236

Expires: June 5, 2029

Renewal Application Due: June 5, 2028

TABLE OF CONTENTS

1. Introduction and General Facility Description 5
1.1 Facility Description 5
1.2 Summary of Changes In The Renewal 2 8
1.3 Changes Made During First Modification (Administrative Amendment) 14
1.4 Compliance History 14
1.5 Performance Testing and Continous Emission Monitoring 16
1.6 Periodic Reports 18
1.7 Emissions Inventory 19
1.8 Miscellaneous Refinery Non-Process Activities 21
1.9 Insignificant Emission Units 21

2. Facility Process Descriptions 22
2.1 Primary Crude Oil Processing Area 23
2.2 Hydroprocessing 25
2.3 Catalytic Cracking, Product Fractionation, And Treating 27
2.4 Benzene Saturation (BenSat) Unit & Isomerization Unit 30
2.5 Butane Isomerization 31
2.6 Alkylation 32
2.7 Flares 33
2.8 Utilities Plant 33
2.9 Reciprocating Internal Combustion Engines (RICE) 34
2.10 Storage, Blending, And Transfer Operations 34
2.11 Oily Wastewater Collection and Treatment 35
2.12 Paint Spray Booth 36

3. Regulatory Requirements 37
3.1 Agency Orders 37
3.2 State and Local Requirements 53
3.3 Federal Requirements 56
3.4 Leak Detection and Repair (LDAR) 73
3.5 Oily Wastewater Collection and Treatment 78
3.6 Storage Tanks 80
3.7 Gasoline Dispensing Facilities 85

4. Air Operating Permit Administration 86
4.1 Federal Enforceability 86
4.2 Future Requirements 86
4.3 Compliance Options 86
4.4 Gap Filling 86
4.5 Compliance Assurance Monitoring (CAM) 93
4.6 Permit Elements and Basis for Terms and Conditions 100
4.7 Insignificant Emission Units and Activities 104
4.8 Public Docket 107
4.9 Definitions and Acronyms 107

1. INTRODUCTION AND GENERAL FACILITY DESCRIPTION

Anacortes Refinery, owned by Marathon Petroleum Corporation (Marathon) dba Tesoro Refining & Marketing Company LLC (Tesoro), is required to obtain an Air Operating Permit (AOP or Permit) because it has the potential to emit (PTE) all of the following:

- 100 tons per year or more of oxides of nitrogen (NOx), sulfur dioxide (SO2), particulate matter, volatile organic compounds (VOC), and carbon monoxide (CO);
- 10 tons per year or more of any hazardous air pollutant (HAP);
- 25 tons per year or more of a combination of HAPs; and
- Both 100,000 tons CO2e per year and 100 tons greenhouse gases (GHGs) per year.

Refineries are one of the 28 listed source categories in 40 CFR 52.21(b)(1)(i)(a). As such, the 100 ton per year threshold applies for determining whether the facility is considered a major source under the Prevention of Significant Deterioration (PSD) program. Tesoro qualifies as a PSD major stationary source because of its PTE.

Figure 1-1: Aerial View of Anacortes Refinery

In accordance with WAC 173-401-700(8), the purpose of this Statement of Basis (SOB) is to set forth the legal and factual basis for the Anacortes Refinery AOP terms and to provide background information to facilitate review of the permit by interested parties. This SOB is not a legally enforceable document.

Northwest Clean Air Agency (NWCAA or Agency) issued the original AOP (AOP 013) for the Anacortes Refinery on November 25, 2002. The AOP was updated and renewed as AOP 013R1 on January 26, 2010. The expiration date was January 26, 2015. The Anacortes Refinery submitted a timely renewal on January 24, 2014 which was posted in the December 24, 2014 Permit Register as complete. See SOB Section 1.2 for the changes made to the AOP during this renewal.

1.1 Facility Description

The Anacortes Refinery produces petroleum-based fuels as classified under the Standard Industrial Classification (SIC) code 2911. The refinery is located at the northern end of March's Point in Skagit County near Anacortes, WA. The refinery receives crude oil, catalytic cracking unit feed, and other petroleum derivatives and materials, and ships finished petroleum products, feed stocks, byproducts, intermediates, and wastes via various forms of transportation. Figure 1-1 is an aerial photo of the Anacortes Refinery.

The refinery was constructed in the 1950s by Shell Oil Company. The first process unit came online in 1955. Shell Oil Company owned and operated the refinery under the name Shell Anacortes Refinery.

In 1998, Tesoro Northwest Company purchased the refinery and renamed it the Tesoro Anacortes Refinery. In 2017, Tesoro changed its name to Andeavor. In 2018, Marathon

Petroleum Corporation (Marathon) purchased the refinery. Marathon is operating the Anacortes Refinery under a wholly-owned subsidiary called Tesoro Refining & Marketing Company LLC. As such, the permit is issued to Tesoro while Marathon is the entity submitting the application. Because the permit is issued to Tesoro, these documents refer to Tesoro as the entity operating the refinery.

The Anacortes Refinery purchases crude oil for processing into a variety of petroleum products. Current refinery crude oil throughput ranges from 115,000 to 123,000 barrels per day of gross crude feed, which includes a crude oil recycle stream. Crude oil is fed to the crude distillation unit, which separates the material into fractions according to boiling point range. The fractions are sent to various process units including the catalytic cracking unit (CCU) for additional processing, blending units to produce refinery fuels, and to storage prior to shipment and/or sales. The refinery does not have a delayed coker unit or fluid coking unit.

Tesoro contracts out the operation of the sulfur treatment for the Anacortes Refinery to the adjacent sulfur treatment complex (including a Sulfur Recovery Unit (SRU) and sulfuric acid plant), currently operated by Chemtrade Solutions LLC (Chemtrade). The sulfur treatment complex is addressed under a separate AOP administered by Chemtrade.

A general refinery process flow diagram is attached as Figure 1-2.

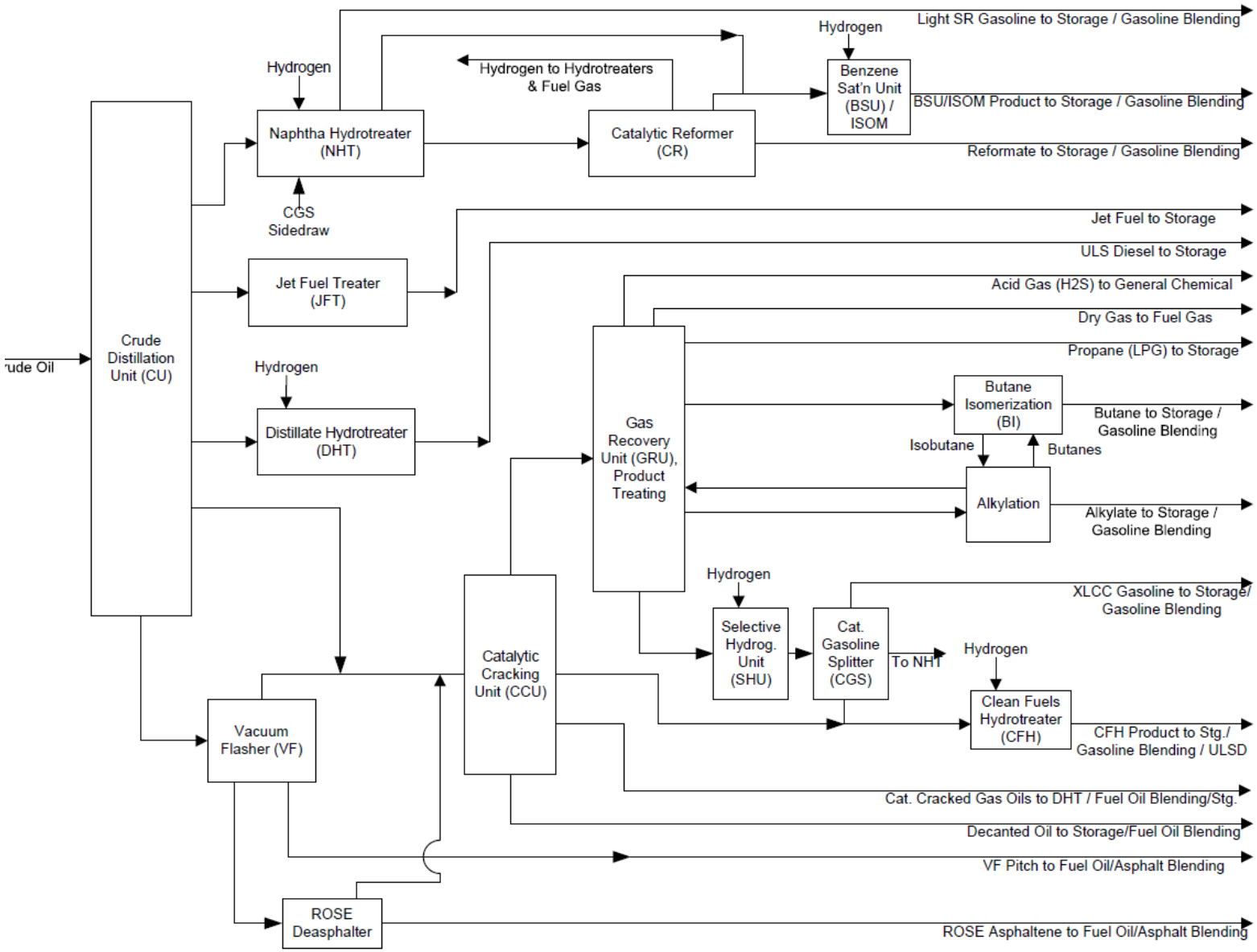

Figure 1-2: Anacortes Refinery Process Flow Diagram

1.2 Summary of Changes In The Renewal 2

1.2.1 Changes Throughout The AOP

Dates for all regulatory citations have been updated as necessary to reflect the most recent dates for federal, state and NWCAA regulations. New regulatory applicable requirements were added where required by the newer regulation.

1.2.2 Information Page

The information page has been reformatted to the current Agency format. Air Operating Permit number has been changed reflecting this being the second AOP renewal. Dates have been changed on this page to reflect the renewal application, the permit issuance and expiration dates. Contact information for individuals involved in the AOP process have been updated as appropriate.

1.2.3 AOP SECTION 1 - Emission Unit Descriptions

Additional information was added to the tables in AOP Section 1 to reflect additional emissions units that have been added due to new regulation (e.g., RICE engines, gasoline dispensing facility) or due to emission units being modified or constructed (e.g., Crude Rail Offloading Facility (CROF), spray booth) since the previous AOP was issued. In addition, information within many of the emissions unit tables have been updated for clarity and accuracy. Emissions unit IDs were removed from the tables in AOP Section 1. These AOP ID numbers are not necessary because emissions units are well understood by their name.

For clarity and ease of use, included master list of refinery storage tanks, including construction/modification date, general service, roof type, and regulatory applicability. A table of the groupings of storage tanks by applicability is included at the beginning of the tank section in AOP Section 5.16.

The following process units were added:

- Benzene Saturation Unit (BenSat)
- Reciprocating Internal Combustion Engines (RICE)
- Truck Rack
- Wharf/Logistics Area
- LPG Loading Facility
- Feedstocks Unloading Facility
- Crude Rail Offloading Facility (CROF)
- Gasoline Dispensing Facility (GDF)
- Paint Spray Booth

Fire training was removed from AOP Section 1 because it is not considered a stationary emissions unit. Fire training fires are permitted on a temporary basis as outdoor burning and addressed in AOP Section 2.

Tank 62 was removed from AOP Section 1 because it was taken out of service in 2010 and its decommissioning was not reflected in any NSR permitting action. Tanks 88 and 90 were changed from CC Group 1 to Out of Service since they will not be maintained as CC Group 1 tanks.

1.2.4 AOP SECTION 2 - Standard Terms and Conditions

Regulatory citations and dates were updated as necessary along with any associated changes to the requirements. In addition, Reporting of Emission of Greenhous Gases (chapter 173-441 WAC) and Nonroad Engines (NWCAA Section 304) were added to AOP Section 2.

1.2.5 **AOP SECTION 3 - Standard Terms and Conditions for NSPS and NESHAP**

Regulatory citations and dates were updated as necessary along with any associated changes to the requirements. Also updated to reflect current Agency template. In addition, AOP Section 3 was modified to include the changes each individual applicable subpart makes to the applicable standard terms and conditions.

The General Provisions in 40 CFR 63 Subpart A include developing a startup, shutdown, and malfunction plan (SSMP) to handle operations around startups, shutdowns, and malfunctions (see 63.6(e)(3)). However, since then, several of the individual 63 Subparts have included specific requirements for operation during these periods and therefore no longer require compliance with the SSMP requirements in 63 Subpart A. Most of the Part 63 subparts that apply to the Anacortes Refinery (i.e., 63 Subparts CC, UUU, ZZZZ, DDDDD, & GGGGG) exclude complying with 63.6(e)(3) so it is not listed in this AOP Section 3. The SSMP requirements do still apply generally to 63 Subparts EEEE; however, the Anacortes Refinery affected sources are not subject to the emission limitations or operation requirements so do not need to comply with SSMP requirements.

Note that the SSM reporting requirements under 63.10(b)(2) still variously apply as they are not restricted to compliance with the SSMP.

1.2.6 **AOP SECTION 4 - Generally Applicable Requirements**

Regulatory citations and dates were updated as necessary along with associated changes to the paraphrased requirements. Gap filled MR&R requirements imposed under WAC 173-401-615(1)(b) & (c) and WAC 173-401-630(1) were better identified by inserting "Directly enforceable" above only those gap-filled requirements and including the gap-filling citation in the citation column.

In AOP Term 4.1, the due dates for submitting periodic reporting under WAC 173-401-630(1) was clarified.

Removed oil burning provisions since none of the refinery units are capable of firing oil.

For clarity and consistency with the other refinery AOPs in NWCAA jurisdiction, the refinery-wide opacity and grain loading monitoring program was moved to AOP Term 6.1. For those sources that do not have explicit MR&R requirements for opacity standards in AOP Section 5, they are to be monitored as part of the refinery-wide program. Those sources (e.g., catalytic cracking unit (CCU)) that do have explicit opacity and/or grain loading standard monitoring in AOP Section 5, they are to comply with the AOP Section 5 requirements only. However, as the opacity standard applies to all sources, point or fugitive, at the refinery, it is expected that the refinery personnel investigate and reduce emissions to below the any applicable standard at any time excess visible emissions are seen.

Also added to AOP Section 4 are:

- Site remediation recordkeeping under 40 CFR 63 Subpart GGGGG
- Refinery-wide tracking, managing, and treating benzene-containing waste under 40 CFR 61 Subpart FF
- Continuous compliance and general duty requirements under 40 CFR 63 Subparts CC, UUU, and ZZZZ
- Fenceline monitoring for benzene required under the refinery sector rule revisions to 40 CFR 63 Subpart CC
- The allowance to rescind the Best Available Retrofit Technology (BART) Order
- Miscellaneous Process Vent requirements for maintenance vents under 40 CFR 63 Subpart CC

1.2.7 AOP SECTION 5 - Specifically Applicable Requirements

Regulatory citations and dates were updated as necessary along with associated changes to the requirements. This included new and revised requirements, such as those found under 40 CFR 63 Subpart CC and Subpart UUU related to the Refinery Sector Risk and Technology Review (RTR). Gap filled MR&R requirements imposed under WAC 173-401-615(1)(b) & (c) and WAC 173-401-630(1) were better identified by inserting "Directly enforceable" above only those gap-filled requirements.

The majority of the changes to AOP Section 5 are related to new and revised orders issued by the NWCAA. SOB Table 1-1 provides a summary of the new and revised orders incorporated during this renewal. Most are Orders of Approval to Construct (OAC) issued by NWCAA. The Agency also issued a compliance order memorializing ongoing requirements from the Consent Decree. Also incorporated are the Best Available Retrofit Technology (BART) Order and the Prevention of Significant Deterioration (PSD) permit issued by the Washington State Department of Ecology (Ecology). Please refer to the SOB Section 3 for more details and history of each action.

Table 1-1: Orders Updated or Added During AOP Renewal 2

Issue Date	Order	Action
Orders of Approval to Construct (OAC) issued by the NWCAA		
October 14, 2009	OAC 651a (hollow)	Administrative revision removing duplicative requirements
August 10, 1999	OAC 705 (hollow)	Approves the Jet Fuel Treater (JFT) process unit
October 14, 2009	OAC 750a (hollow)	Administrative revision removing duplicative requirements
July 6, 2023	OAC 827c	Administrative revision converting LDAR to be consistent, deleting alternative standard limit and compliance method to rely upon single compliance point, removing valve prohibition due to process changes and treatment expansion, and removing duplicative reporting
February 16, 2024	OAC 946c	Administrative revision to an order applying to the CCU flue gas scrubber (FGS) and catalyst additive hopper V-356. Replaced periodic stack testing for CO and NOx with continuous emission monitors
July 6, 2023	OAC 952c	Administrative revisions converting LDAR to be consistent, removing reference to burning fuel oil, removing duplicative reporting requirements
April 13, 2023	OAC 989b	Administrative revision converting LDAR to be consistent, removing reference to burning fuel oil, removed no longer necessary reporting
April 13, 2023	OAC 1031a (hollow)	Administrative revision removing references to burning fuel oil (refinery heaters no longer can fire fuel oil)

Issue Date	Order	Action
April 13, 2023	OAC 1037b	Administrative revision indicating the heater may only fire natural gas (heater was never plumbed for refinery fuel gas)
October 30, 2009	OAC 1050a (hollow)	Administrative revision removing duplicative requirements
November 5, 2011	OAC 1101 (hollow)	Approves the Crude Railcar Offloading Facility (CROF)
April 14, 2023	OAC 1171a	Administrative change to remove the PUL Day Tank that was not constructed, remove completed conditions, and revise reporting requirements
May 30, 2014	OAC 1182	Approves a new flare gas recovery system
November 26, 2014	OAC 1184	Approves the installation of low-NOx burners in Crude Heater F-101
September 15, 2014	OAC 1190	Approves a new facility to unload CCU feedstock from railcars
February 13, 2015	OAC 1205	Approves an operability and yield improvement project at the Crude Unit and Vacuum Flasher Unit.
January 25, 2024	OAC 1222a	Administrative change removing the portions of the project not constructed - new boiler, ARU process unit, ARU tanks, and MVEC
November 10, 2016	OAC 1249	Approves a new compressor at the Alkylation Unit
January 31, 2017	OAC 1261 (hollow)	Approves a modification to Tank 113
February 7, 2019	OAC 1309	Approves a new multi-loader catalyst adder system at the CCU
February 27, 2019	OAC 1317	Approves a system for injecting lubricity and conductivity additives to diesel fuel at the truck rack
August 5, 2020	OAC 1353 (hollow)	Approves a new spray booth for equipment maintenance work.
September 9, 2022	OAC 1395	Approves SNCR on F-304
Compliance Orders issued by the NWCAA		
August 18, 2023	Compliance Order 1006-23-08 (CO23)	Requires controls on flaring, enhanced LDAR, and limits sulfur emissions from the Vacuum Flasher Heater to memorialize these requirements from the Consent Decree.
Orders issued by Washington State Department of Ecology		
July 7, 2010	BART Order 7838	Requires BART be applied at numerous emission units within the refinery to protect visibility

Issue Date	Order	Action
July 18, 2017	PSD 17-01	PSD permit associated with the CPUP project (OAC 1222). Only included the requirements applicable to units constructed

SOB Table 1-1 includes those OACs incorporated during this renewal that do not contain any ongoing enforceable conditions which are notated as "(hollow)" but are still included in AOP Section 1 to indicate that the equipment has been modified and gone through NSR review.

The following process units and applicable requirements were added to AOP Section 5:

- Benzene Saturation Unit (BenSat)
- Reciprocating Internal Combustion Engines (RICE)
- Truck Rack
- Wharf/Logistics Area
- LPG Loading Facility
- Feedstocks Unloading Facility
- Crude Rail Offloading Facility (CROF)
- Gasoline Dispensing Facility (GDF)
- Paint Spray Booth

The following regulations were added during this renewal because of either new equipment added that is subject to the rule or the recent effective date of each rule.

- WAC 173-491-040(2) - Truck Rack
- Chapters 173-441 WAC – Greenhouse Gases
- NWCAA Section 508 – Spray Coating Operations
- NWCAA 580.6 – Gasoline Dispensing Facilities
- 40 CFR 60 Subpart Ja - Standards of Performance for Petroleum Refineries for Which Construction, Reconstruction, or Modification Commenced After May 14, 2007 – Crude Heater F-101 and Flares X-813 & X-814
- 40 CFR 60 Subpart XX - Standards of Performance for Bulk Gasoline Terminals – Truck Rack
- 40 CFR 60 Subpart NNN – Standards of Performance for Volatile Organic Compound (VOC) Emissions From Synthetic Organic Chemical Manufacturing Industry (SOCMI) Distillation Operations - BI Stabilizer Column, BI De-Isobutanizer Column, and Gas Recovery Plant De-Propanizer Column
- 40 CFR 60 Subparts IIII & JJJJ - Standards of Performance for Stationary Internal Combustion Engines
- 40 CFR 61 Subpart J – National Emission Standard for Equipment Leaks (Fugitive Emissions Sources) of Benzene - BenSat and Isomerization Unit
- 40 CFR 63 Subpart Y – National Emission Standards for Marine Tank Vessel Loading Operations
- 40 CFR 63 Subpart CC – National Emission Standards for Hazardous Air Pollutants from Petroleum Refineries
    - Miscellaneous Process Vents
    - Storage Vessels - Applicability change and roof fittings requirements (40 CFR 63 Subpart WW)

  - Equipment Leaks – Pressure Relief Devices
  - Heat Exchangers
  - Benzene Fenceline Monitoring
- 40 CFR 63 Subpart EEEE – National Emission Standards for Hazardous Air Pollutants: Organic Liquids Distribution (Non-Gasoline)
- 40 CFR 63 Subpart ZZZZ—National Emissions Standards for Hazardous Air Pollutants for Stationary Reciprocating Internal Combustion Engines
- 40 CFR 63 Subpart DDDDD – National Emission Standards for Hazardous Air Pollutants for Major Sources: Industrial, Commercial, and Institutional Boilers and Process Heaters

Fire training was removed from AOP Section 5 because it is not considered a stationary emissions unit. Fire training fires are permitted on a temporary basis as outdoor burning and addressed in AOP Section 2.

Tank 62 was removed from AOP Section 5 because it was decommissioned and taken out of service in 2010. Tanks 88 and 90 were removed as well because they were taken Out of Service.

Tank 216 was originally considered a diversion tank used for primary clarifier effluent that was not subject to any requirements. However, due to a recent regulatory applicability analysis, the AOP was revised to reflect that it (and the accompanying Diversion Sump) were subject to 40 CFR 61 Subpart FF. In addition, because it also serves as a backup to other effluent plant tanks, Tank 216 is also subject to 40 CFR 63 Subpart CC Group 1 and 40 CFR 60 Subpart Kb requirements.

Originally, various combustion units at the Anacortes refinery were constructed and plumbed to fire fuel oil (i.e., No. 6). According to Tesoro, the refinery no longer has the capability to burn No. 6 fuel oil; the storage equipment has not yet been removed but the piping has been capped. The last time the refinery fired fuel oil was in 2008. As such, as part of this renewal, references to firing fuel oil have been removed. Note that no units are permitted to or plumbed to fire distillate (i.e., No. 2 fuel oil). During a natural gas curtailment, the refinery will fire propane as the backup fuel.

1.2.8 **SECTION 6 Common Requirements**

For clarity and consistency with the other refinery AOPs in NWCAA jurisdiction, the refinery-wide opacity and grain loading monitoring program was moved to AOP Term 6.1. In addition, the requirements under 40 CFR 63 Subpart CC for Pressure Relief Devices was added in AOP Section 6.4.

1.2.9 **SECTION 7 Monitoring Plans**

No changes have been made to the requirements for the fuel sulfur content at Boiler F-753 Alternative Monitoring Plan (AMP) (AOP Section 7.1) and HCl from the Catalytic Reformer AMP (AOP Section 7.2).

The Boiler F-753 AMP in AOP Section 7.1 includes a reference to a particular test method for measuring sulfur (SMS 217-82). A note was added in AOP Section 7.1.8.2 during this renewal discussing the fact that this method is obsolete and outlining the method that the Anacortes Refinery will be using going forward.

Additionally, the Anacortes Refinery received a new AMP issued November 12, 2020 allowing them to utilize the monitoring, recordkeeping, and reporting stipulated under 60 Subpart RRR rather than that under 60 Subpart NNN. The applicable 60 Subpart NNN requirements as modified by the AMP are reflected in AOP Terms 5.3.22, 5.3.23, 5.5.1, and 5.5.2. For

completeness and similar to the other refinery AMPs, this AMP is attached to the AOP as AOP Section 7.3.

In addition, the Compliance Assurance Monitoring Plan for opacity/PM at the Catalytic Cracking Unit is also now included as AOP Section 7.4.

1.2.10 **AOP SECTION 8 - Inapplicable Requirements**

The following have been added to the list of inapplicable requirements in AOP Section 8.

- 40 CFR 60 Subpart JJJJ - Standards of Performance for Stationary Spark Ignition Internal Combustion Engines because there are no affected engines at the refinery.
- 40 CFR 63 Subpart CCCCCC - National Emission Standards for Hazardous Air Pollutants for Source Category: Gasoline Dispensing Facilities because the refinery has a gasoline dispensing facility (GDF) that is located at a major source of HAPs, and the rule only applies to GDFs at area sources.

1.3 Changes Made During First Modification (Administrative Amendment)

On July 30, 2026, NWCAA received Responsible Official/Duly Authorized Representative Identification Form from identifying the new Responsible Official, Robert Atkinson, Vice President of Marathon Anacortes Refinery, and identifying Amber Larsen, Refining Environmental, Safety and Security Director, as a duly authorized representative to act in his stead. The Permit Information on page 2 of the AOP and Statement of Basis were changed to reflect issuance of this modification, and references to the current Responsible Official were updated. These changes were performed in accordance with WAC 173-401-720.

1.4 Compliance History

A summary of Notices of Violation (NOVs) issued to the Anacortes Refinery by NWCAA from January 1, 2010 through July 31, 2023 is presented in SOB Table 1-2. This summary covers the period back to the date of issuance of the last AOP renewal. Each violation listed in the table has been resolved through a combination of penalty assessments and by corrective action taken by the source.

Table 1-2: Notices of Violation issued between January 1, 2010 through July 31, 2023

NOV	Issued	Date of Violation	Description of Violation	Closure
4621	10/17/22	Feb 2021	Failure to maintain replacement nozzles for the flue gas scrubber (FGS) resulting in an extended outage and excess SO2 and opacity at the flares.	Rescinded due to determination under NWCAA 455.15
4617	10/17/22	Dec 2021	Insufficient weatherization to prevent operational upsets and excess emissions that occurred 12/26/21 through 12/28/21.	Closed out based on facility response. No formal enforcement action
4560	5/26/22	Multiple (2020 - 2021)	Carbon monoxide (CO) emissions from the fluidized catalytic cracking unit exceeded hourly CO limit on 5 separate occasions.	$6,000 penalty

NOV	Issued	Date of Violation	Description of Violation	Closure
4559	5/26/22	5/16/21	On May 16, 2021, the tube side of heat exchanger E-5507 in the Residuum Oil Supercritical Extraction (ROSE) Unit failed, allowing gaseous propane, butane, and hydrogen sulfide into asphaltic material that went to uncontrolled, unheated fixed-roof storage tank resulting in excess VOC and hydrogen sulfide emissions.	Closed out based on facility response. No formal enforcement action
4557	5/26/22	9/28/21	On September 28, 2021, the vapor recovery system at the Tesoro Truck Loading Rack malfunctioned resulting in bypass of the control equipment and uncontrolled gasoline loading of 15 transport vehicles resulting in excess VOC emissions.	$6,000 penalty
4368	6/19/19	Multiple (2018)	The refinery has excess opacity and/or uncombusted VOC from the flare during 5 events because of a failure to design, install, and operate a flare steam control system adequately.	$5,000 penalty
4359	5/28/19	Multiple (2018)	The refinery missed required QA/QC (i.e., daily calibration drift checks) and had low data availability on three continuous emissions monitoring systems (CEMS).	$20,000 penalty
4346	5/28/19	5/28/18	This event and associated excess emissions were caused by an emergency shutdown of the catalytic cracking unit (CCU) wet gas compressor when a flange gasket failed on the V-404 disengaging drum.	$5,000 penalty
4281a	6/29/18	10/26/17	The refinery had excess sulfur dioxide emissions from the flare and carbon monoxide emissions from the CCU diversion stack due to a process trip caused by a backup lubricating oil system failure.	$4,000 penalty
4270	1/25/18	Multiple (2017)	The refinery missed required QA/QC (i.e., daily calibration drift checks) and had low data availability on four continuous emissions monitoring systems (CEMS).	$12,000 penalty
4269	1/11/18	6/5/16	Refinery flare X-813 was extinguished during flaring events due to over-steaming resulting in uncombusted VOC.	No formal enforcement action. New flare system installed due to the 2016 Consent Decree. The new system was in shakedown when the events occurred.
4268	1/10/18	5/6/16	Refinery heaters and boilers exceeded the SO2 standard caused by amine foaming and carryover during startup of Amine 2 unit after an extended outage that shut down sulfur recovery.	$4,000 penalty

NOV	Issued	Date of Violation	Description of Violation	Closure
4266	1/10/18	2/7/16	Between February 7 and 14, 2016, emissions from the Tesoro catalytic cracking unit exceeded the particulate matter standard due to operating with the diversion stack after boiler tube failures in CO Boiler 2 shut down that portion of the unit.	$8,000 penalty
4241	3/20/17	6/19/15	Refinery acid gas flaring was caused by a power failure at the sulfur treatment process unit resulting in excess SO2 emissions.	Agreed Compliance Order 17 signed by both parties 2/7/18.
4129	2/5/15	6/1/13	During an audit of the refinery Leak Detection and Repair (LDAR) program, Tesoro discovered 873 newly-installed valves had not been monitored for two successive months.	$12,000 penalty
4074	3/12/14	9/4/12	The Tesoro refinery constructed and, on September 4, 2012, commenced operation of a crude unloading facility wastewater collection system without the required controls installed.	$75,000 penalty
4072	1/28/14	10/1/13	On October 1, 2013 a series of electrical failures, including improper fusing, resulted in shutdown of the catalytic cracking unit (CCU) and diversion of the sour water stripper gas to the facility flare resulting in excess emissions of SO2 at the flare.	$2,000 penalty
4011	1/28/13	11/14/12	Tesoro modified heater F-101 by replacing the burner tips in August 2011 showing a NOx emissions increase triggering federal requirements.	$90,000 penalty and Agreed Compliance Order 09
3842	6/11/10	3/17/10	On March 17, 2010, The Tesoro Refinery experienced a sudden shutdown of three boilers, which resulted in process unit upsets and flaring and excess emissions of opacity at the flares, particulate matter, and SO2.	$3,000 penalty

1.5 Performance Testing and Continous Emission Monitoring

Each year, performance tests at refinery emissions units are performed to determine compliance with emission limits and standards found in Orders of Approval to Construct (OAC) issued by NWCAA, Prevention of Significant Deterioration (PSD) permits issued by Ecology, and as part of New Source Performance Standards (NSPS) or National Emission Standards for Hazardous Air Pollutants (NESHAP) requirements.

- Crude Heater (F-103) - NOx (Annual commencing in 2015 (BART))
- Truck Rack (VaVaCS on/off) – VOC (5 year commencing 2016 (OAC))
- Catalytic Cracking Unit (CCU) - CO (Annual commencing in 2005 (OAC) replaced with CEMS in 2024 (OAC)), NOx (Annual commencing in 2005 (OAC) replaced with CEMS in 2024 (OAC)), PM (5 year commencing in 2017 (UUU))
- BenSat Reboiler (F-6602) – CO (Annual commencing 2012 (OAC))
- Crude Heater (F-101) - CO (5 year commencing 2000 (RO) changed to annual in 2014), NOx (5 year commencing 2000 (RO) added CEMS in 2015 (Ja))

- CGS Reboiler (F-104) - NOx (5 year commencing 2005 (OAC))

SOB Table 1-3 contains information on the tests performed between last AOP renewal issuance in 2010 and 2023. Note that additional testing may have taken place beyond the mandated periodic testing listed above for a variety of reasons (e.g., pre-project, post-project, different operating scenario). All listed tests showed compliance with the standard except as marked.

Table 1-3: Performance Test Summary 2010-2023

Emission Unit	Pollutant	Limit	Test Dates
Crude heater F-103	NOx	59.1 ton/yr	6/30/15, 11/2/15, 11/24/15, 1/5/16, 3/21/17, 3/20/18, 4/9/19, 9/15/20, 5/28/21, 5/11/22, 2/23/23
Truck Loading Rack Vapor Recovery Unit	Organics	2.4 mg TOC/L gasoline loaded	2/25/16*, 9/21/16, 9/9/20 (VaVaCS on), 9/10/20 (VaVaCS off)
Catalytic Cracking Unit (CCU)	CO	500 ppmdv	4/20/10, 4/19/11, 4/30/12, 6/26/13, 6/24/14, 6/11/15, 3/29/16. 3/22/17, 3/16/18, 6/19/19, 6/24/20, 5/27/21, 5/10/22, 2/22/23
	NOx	1770 ton/yr	4/20/10, 4/19/11, 4/30/12, 6/26/13, 6/24/14, 6/11/15, 3/29/16. 3/22/17, 3/16/18, 6/19/19, 6/24/20, 5/27/21, 5/10/22, 2/22/23
	PM	1 lb/1000 lb of coke	3/22/17, 6/1/17, 7/6/18, 2/22/23
	PM	0.11 gr/dscf # 7% O2	7/6/18, 2/22/23
BenSat Heater F-6602	CO	0.04 lb/MMBtu	1/27/12, 1/29/13, 1/29/14, 6/16/15, 5/25/16, 4/5/17, 8/24/18, 9/12/19, 9/16/20, 5/26/21, 5/13/22, 2/27/23
	NOx	53 ppmvd @ 0% O2	1/31/14
	NOx	4.4 lb/hr	1/29/14, 5/25/16
Crude heater F-101	CO	0.03 lb/MMBtu	1/25/11, 1/10/12, 3/28/12, 7/7/15, 7/26/16, 8/8/17, 7/19/18, 9/10/19, 9/17/20, 5/26/21, 5/12/22, 2/24/23
	NOx	21.6 ton/yr	1/25/11, 1/10/12, 3/28/12, 7/19/18, 9/10/19, 9/17/20,
CGS Column C-113 reboiler F-104	NOx	0.035 lb/MMBtu	5/25/05, 5/30/07, 5/1/12, 4/4/17, 5/11/22

* Invalid test redone in 2020. See discussion of OAC 1171 for details.

Some emission units at the refinery are not source tested because the units are equipped with Continuous Emission Monitoring Systems (CEMS). SOB Table 1-4 lists the locations of the CEMs and what pollutants they monitor for.

Table 1-4: Continuous Emission Monitoring Systems (CEMS)

Emission Unit	Pollutant (Date installed & Trigger)
Crude Heater F-101	NOx & O2 (2015 (Ja))
BenSat column C-6601 Reboiler F-6602	NOx & O2 (2012 (OAC))
Boiler F-753	NOx & O2 (1993 (OAC))
Truck Rack	Organic Vapors (2016 (OAC))

Catalytic Cracking Unit Flue Gas Scrubber	NOx (2024 (OAC)), CO (2024 (OAC)), SO2 & O2 (2001 (OAC))
V-213 Blend Drum	H2S (2003 (OAC))
Flare Gas	H2S & TS (2008 (Ja))

1.6 Periodic Reports

Anacortes Refinery has periodic reporting requirements contained in various orders and regulations. Reported elements provide a valuable tool indicating the refinery's compliance status with regard to an applicable emission limit or work practice standard. In addition to these periodic reports the refinery has specific action-based notifications and on-site recordkeeping requirements. Note that, similar to all recordkeeping, the data supporting the reported information must be maintained for at least 5 years from its date of generation.

Generally, reports are due 30 days after the close of the period that the reports cover. Also, the reporting periods are on a calendar basis: monthly reports shall cover a calendar month, quarterly reports shall cover a calendar quarter, six-month reports shall cover January through June and July through December, and annual reports shall cover a calendar year.

The following is an overview of the types of information contained in various reports that Tesoro submits, and the frequency on which they're submitted. This description is not meant to be exhaustive – see the AOP for the full listing of required reports.

Monthly Reports: The monthly reports include a wide range of data collected during the month that are required to be submitted monthly by various permits, orders and regulations. A large part of the monthly report comprises continuous emission monitoring system (CEMS) performance data which provides information about the duration and nature of CEMS downtime, changes made to the CEMS, total operating time and dates of CEMS audits or certifications. Another significant element of monthly reports is the disclosure of deviations from required monitoring and from exceeding an enforceable emission limit.

Quarterly and Semiannual Reports: The refinery is required to submit quarterly reports under 40 CFR 61 Subpart FF certifying that the company met all applicable 61 Subpart FF requirements. These include, but are not limited to, visual inspections of seals, hatches and openings, identification of API floating roof seal gap measurements, an indication that seal gaps were repaired within required timeframes, an indication that all flare pilots were lit at all times when process gas was sent to the flare, carbon canisters were replaced within required timeframes, and certification that all required inspections have been performed.

The refinery is required to submit semiannual reports under 40 CFR 63 Subparts CC and UUU which should address any compliance exceptions to the requirements of the rules including, but not limited to: delay of repair of storage tanks, failure of any pilot light on a flare, and leak detection and repair monitoring summaries. Fenceline benzene monitoring reports are submitted quarterly via EPA's CEDRI electronic reporting system. In addition, semiannual reports required under 40 CFR 60 Subparts J/Ja require flare root cause analysis and corrective action analysis. Semiannual reports required under 40 CFR 60 Subpart QQQ require reporting the date and type of defect found in the Individual Drain Systems along with the corrective action taken.

The leak detection and repair (LDAR) program (required under multiple regulations) also requires a semiannual report that summarizes the number of leaking components found and the number not repaired in a timely manner, an explanation as to the reason for the delay of repair, any process unit shutdowns, and any revisions to the program since the initial report.

Annual Reports: 40 CFR 61 Subpart FF requires an annual report that summarizes the total annual benzene quantity from facility waste, identifies each waste stream and whether or not

the waste stream will be controlled for benzene, and, for uncontrolled streams, lists parameters describing the uncontrolled streams along with the annual benzene quantity for each.

Additionally, the refinery is required to submit an annual report under 40 CFR 61 Subpart FF that includes the results of annual monitoring per Method 21, summary of annual inspections of individual drain systems and vacuum trucks.

40 CFR 63 Subpart DDDDD requires an annual compliance report that summarizes tune-ups performed on subject boilers and heaters and post-tune-up combustion analysis.

Compliance Certifications: All required monitoring reports must be certified by a responsible official of the truth, accuracy, and completeness of the reports. Where an applicable requirement requires reporting more frequently than once every six months, the responsible official's certification need only to be submitted in a semiannual report that specifically identifies all documents subject to the certification.

Also, the refinery is required to submit an annual compliance certification that lists each term of the permit, the compliance status, whether the compliance was continuous or intermittent, and the methods used for determining the compliance status.

1.7 Emissions Inventory

Each year the refinery is required to submit an emissions inventory for the entire facility upon request of NWCAA. This report includes criteria air pollutants (carbon monoxide (CO), nitrogen oxides (NOx), fine particulate matter (PM10), sulfur dioxide (SO2), and volatile organic compounds (VOC)), toxic air pollutants (TAPs), hazardous air pollutants (HAPs), and greenhouse gas (GHG) emissions (CO2e). Generally submitted in Ecology's WEIRS system, inventory reports from the refinery are categorized into different source groups as well as for individual emission units. NWCAA uses the emissions inventory data in a jurisdiction-wide emissions inventory report that includes a summary of annual emissions for large industrial facilities. It is also used to determine the AOP fees. A recent history of air pollution emitted from the Anacortes Refinery is summarized in SOB Tables 1-5 and 1-6.

Table 1-5: Annual Air Pollution Emissions from the Anacortes Refinery

	Tons per Calendar Year*						
Air Pollutants	**2016**	**2017**	**2018**	**2019**	**2020**	**2021**	**2022****
PM_{10}	138	144	133	150	124	147	146
SO_2	125	80	80	74	57	118	81
NOx	2020	1971	1876	2,098	1587	1720	1873
VOC	955	863	805	904	662	794	804
CO	488	475	445	446	359	473	464
CO2e (metric tons)	1.35E6	1.35E6	1.23E6	1.42E6	1.21E6	1.30E6	1.37E6

* English tons, except for CO2e, which is in metric tons
** Draft values

Table 1-6: Annual Actual HAP and TAP Emissions from the Anacortes Refinery

	Tons per Calendar Year						
Air Pollutants*	**2016**	**2017**	**2018**	**2019**	**2020**	**2021**	**2022****
1,2,4-Trimethylbenzene	1.6	1.6	1.7	2.3	2.3	0.1	--
1,3,5-Trimethylbenzene	0.1	0.1	0.1	0.1	--	0.1	0.1
1,3-Butadiene	0.2	0.2	0.2	0.2	0.2	0.2	0.2
Acetaldehyde	0.4	0.4	0.4	0.6	0.5	0.5	0.2
Benzene	10.1	8.5	7.9	8.8	7.0	5.9	6.5
Carbonyl Sulfide	2.2	2.3	1.9	2.4	1.8	2.1	2.1
Chloroform	0.3	0.4	0.4	0.4	0.3	0.4	--
Cumene	5.5	4.0	3.4	4.2	2.5	3.3	4.1
Cyclohexane	2.9	2.9	14.7	17.9	11.7	13.7	16.4
Di(2-ethylhexl)phthalate	--	2.0	2.1	2.3	2.3	--	--
Ethylbenzene	8.1	6.4	5.6	7.0	4.3	5.4	6.7
Formaldehyde	0.6	0.7	0.6	1.2	0.9	1.1	0.8
Hexane	22.0	17.9	16.6	18.6	12.3	15.0	19.7
Hydrogen Chloride	--	--	0.4	0.5	0.3	0.4	0.4
Hydrogen Cyanide	2.9	2.9	0.3	3.0	2.8	3.0	3.0
Hydrogen Sulfide	2.7	2.7	3.0	2.9	6.4	5.1	3.0
Methyl Ethyl Ketone	0.5	1.6	1.6	2.6	1.8	3.7	2.5
Methyl Isobutyl Ketone	--	0.5	0.4	0.8	0.4	1.1	0.5
Naphthalene	1.0	0.8	0.8	0.8	0.6	0.6	0.7
Nickel	0.1	0.1	0.1	0.1	0.1	0.1	0.1
Phenol	1.3	1.3	1.3	--	1.3	1.3	1.3
Phosphorus	0.1	0.1	0.1	0.1	0.1	0.1	--
Propylene	--	--	0.2	0.2	0.2	0.2	0.2
Sulfuric Acid	44.6	30.1	27.8	28.1	21.8	30.2	31.9
Toluene	43.3	32.8	29.0	35.8	23.2	27.0	32.9
Vanadium	--	--	0.2	0.2	0.2	0.2	0.2
Xylenes (Mixed Isomers)	49.4	37.3	32.7	40.4	25.3	31.8	38.3

* Included only those individual HAPs and TAPs with greater than 0.045 tons per year
** Draft values

The Prevention of Significant Deterioration (PSD) program requires additional monitoring and reporting (referred to as "reasonable possibility monitoring") for projects where PSD non-applicability relies upon projected actual operation and project emissions exceed 50% of the PSD Significant Emission Rates (SERs) (WAC 173-400-720(4)(b)(iii)(G) & 40 CFR 52.21(r)(6)). Calendar-year actual emissions must be reported to demonstrate that the future actual

emissions do not exceed those assumed in the project application and relied upon to avoid triggering PSD. This reporting must be done for 5 years after startup and 10 years after startup for units where the project changed the design capacity of the unit. This reasonable possibility reporting requirement is included as AOP Term 2.4.6.

Based on a file review, as of this writing, the only Anacortes Refinery OAC found subject to reasonable possibility reporting is OAC 1222a. See SOB Section 3.1.1 for further discussion.

1.8 Miscellaneous Refinery Non-Process Activities

There are several regulated activities that can emit air pollutants not generated by refining processes. These include refinery laboratory services, asbestos removal, fire training, abrasive blasting, painting, gasoline dispensing, and cutback asphalt paving. Asbestos removal occurs during the demolition or modification of buildings and piping that are likely to contain asbestos-containing materials such as insulation and tiles. The refinery is subject to federal, state and NWCAA asbestos requirements. Fire training employs open burning during the instruction of the refinery's emergency response personnel. Open burning activities are subject to state and NWCAA requirements. Abrasive blasting and painting occurs during maintenance and repair activities of tanks and equipment at the refinery to remove old and chipped paint and surface contaminants. This activity is subject to state and NWCAA regulations. Gasoline is dispensed from one pump for fueling the refinery's fleet of vehicles used on site, regulated under NWCAA gasoline dispensing regulations. Finally, cutback asphalt paving occurs from time to time at the refinery to repair road and other impermeable surfaces. The use of cutback asphalt is subject to NWCAA regulations.

1.9 Insignificant Emission Units

The refinery has emission units and activities determined to be insignificant under WAC 173-401-530, -532, and -533. In general, they are considered insignificant because they have low emission rates or generate only fugitive emissions. The Generally Applicable Requirements in AOP Section 4 apply to these units, although the testing, monitoring, recordkeeping, and reporting requirements do not apply. As specified in WAC 173-401-530(2)(a), no emission unit or activity subject to a federally enforceable requirement, other than generally applicable requirements of the state implementation plan, may qualify as insignificant. The insignificant emission units and activities located at Anacortes Refinery are listed in SOB Section 4.7. Note that categorically exempt activities per WAC 173-401-532 do not need to be identified for the exemption to apply.

2. FACILITY PROCESS DESCRIPTIONS

The following section provides a description of each refinery process area along with a process flow diagram, a brief construction history, and discussion of specific regulatory applicability issues to support determinations in the AOP. They have been grouped into logical areas either by process unit interrelationships or geographical areas. For further detail regarding the construction permit history or issued OACs, see the previous version of the AOP, SOB, or specific permitting documentation.

- Primary Crude Oil Processing Area
- Hydroprocessing Area
- Catalytic Cracking Unit (CCU)
- Benzene Saturation Unit (BenSat)
- Butane Isomerization Unit (BI)
- Alkylation Unit (Alky)
- Flare Area
- Utilities Plant
- Reciprocating Internal Combustion Engines (RICE)
- Storage, Blending, And Transfer Operations – Truck Rack, Wharf/Logistics Area, LPG Loading Facility, Feedstocks Unloading Facility, Crude Rail Offloading Facility (CROF), Storage Vessels & Tank Farms Truck Rack
- Gasoline Dispensing Facility (GDF)
- Oily Wastewater Collection and Treatment
- Paint Spray Booth

Tesoro contracts out the operation of the sulfur treatment for the Anacortes Refinery to the adjacent sulfur treatment complex (including a Sulfur Recovery Unit (SRU) and sulfuric acid plant), currently operated by Chemtrade Solutions LLC (Chemtrade). The sulfur treatment complex is addressed under a separate AOP administered by Chemtrade.

The refinery areas are presented in the same order found in the AOP for ease in cross-referencing. The construction history provides a valuable insight into how and why specific requirements were applied during the NSR permitting. In general, one-time only conditions that have been met are not discussed because they are not considered part of on-going compliance requirements for the facility. If a specific term in the AOP is clear and consistent with the underlying requirement there is no need to discuss the term further in the SOB. However, where gap filling has occurred, a regulatory interpretation has been made, or where the level of regulatory complexity warrants clarification, they are discussed herein.

2.1 Primary Crude Oil Processing Area

2.1.1 Crude Distillation Unit

The Crude Distillation Unit separates crude oil (including some recycle stocks) by distillation into fractions according to boiling point range. The fractions produced are sent to storage and/or other refinery process units. An illustrative process flow diagram of the Crude unit is included in Figure 2-1.

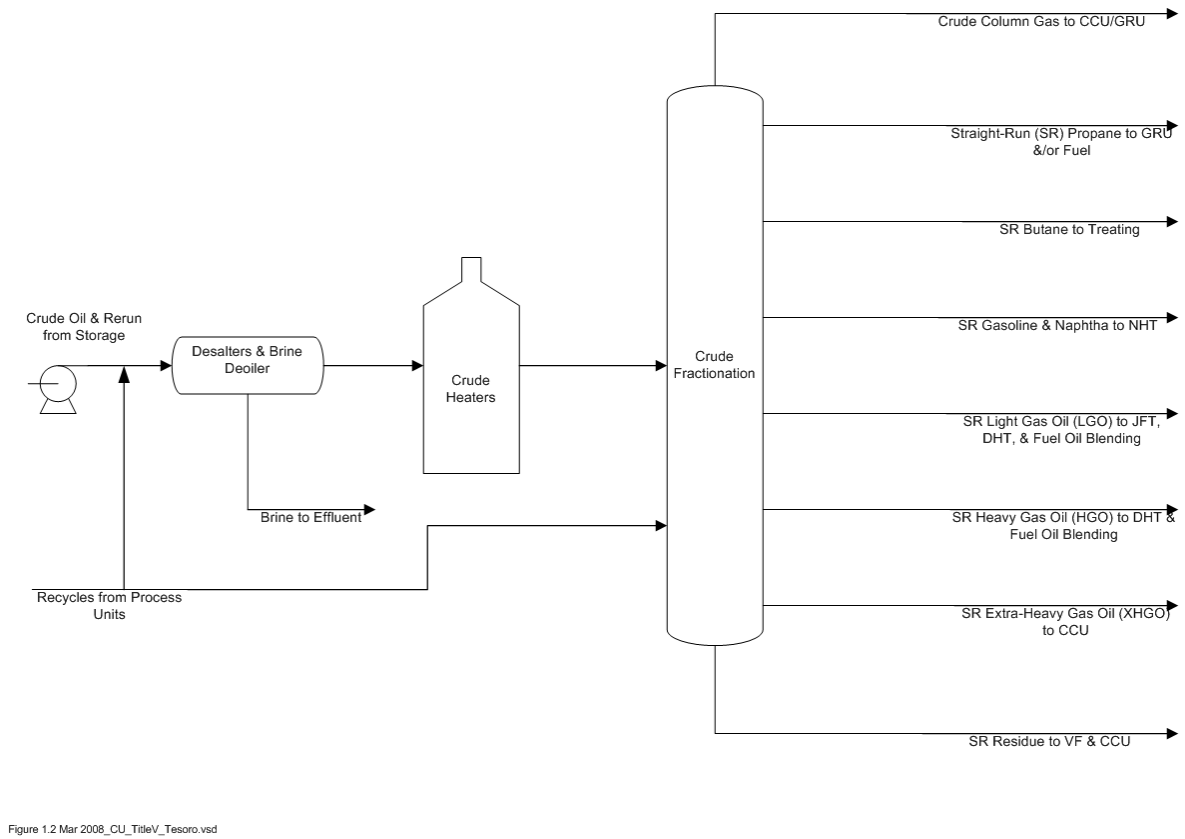

Figure 2-1: Crude Distillation Unit

Crude oil from on-site storage tanks is first desalted to remove contaminants that could cause downstream fouling or corrosion. The desalted crude is then heated and charged to the crude column, where it is distilled into fractions; the fractions are routed to other process units or to storage tanks. The overhead liquid, which contains LPG-range and gasoline-range material, is subjected to further distillation before being sent to other process units. Products in the gasoline and gas-oil boiling ranges are routed to storage or to hydrotreaters, the Catalytic Cracking Unit (CCU), the Jet Fuel Treater or the Fuel Oil Blenders. The highest-boiling-point (heaviest) fraction, Straight-Run (SR) Residue, is fed to the Vacuum Flasher or the CCU.

2.1.2 Crude Residue Vacuum Distillation Unit (Vacuum Flasher)

The Vacuum Flasher separates SR residue into fractions under vacuum. The separation takes place under vacuum conditions because the higher temperatures required to fractionate the residue at higher pressures would result in thermal cracking of the residue and coke formation in the process equipment. The recovered distillates are fed to the CCU; the remaining fraction, pitch, is sent to the Residuum Oil Supercritical Extraction (ROSE) Unit or the CCU for further processing or is blended into fuel oil or asphalt binder.

2.1.3 **Residuum Oil Supercritical Extraction (ROSE) Deasphalter**

The ROSE Deasphalter uses propane/butane solvent to extract oils suitable for CCU Feed from VF pitch. The extract, DA Oil or ROSE Oil, is fed to the CCU; the raffinate, ROSE asphaltene, is blended into fuel oil or asphalt binder. An illustrative process flow diagram of the Vacuum Flasher, Deasphalter and ROSE Unit is included as Figure 2-2.

The fuel oil and asphalt blender areas meter lighter oils with asphalt and pitch produced at the refinery to make fuel oils suitable for sale as finished products (e.g., marine fuel oil, industrial fuel oil).

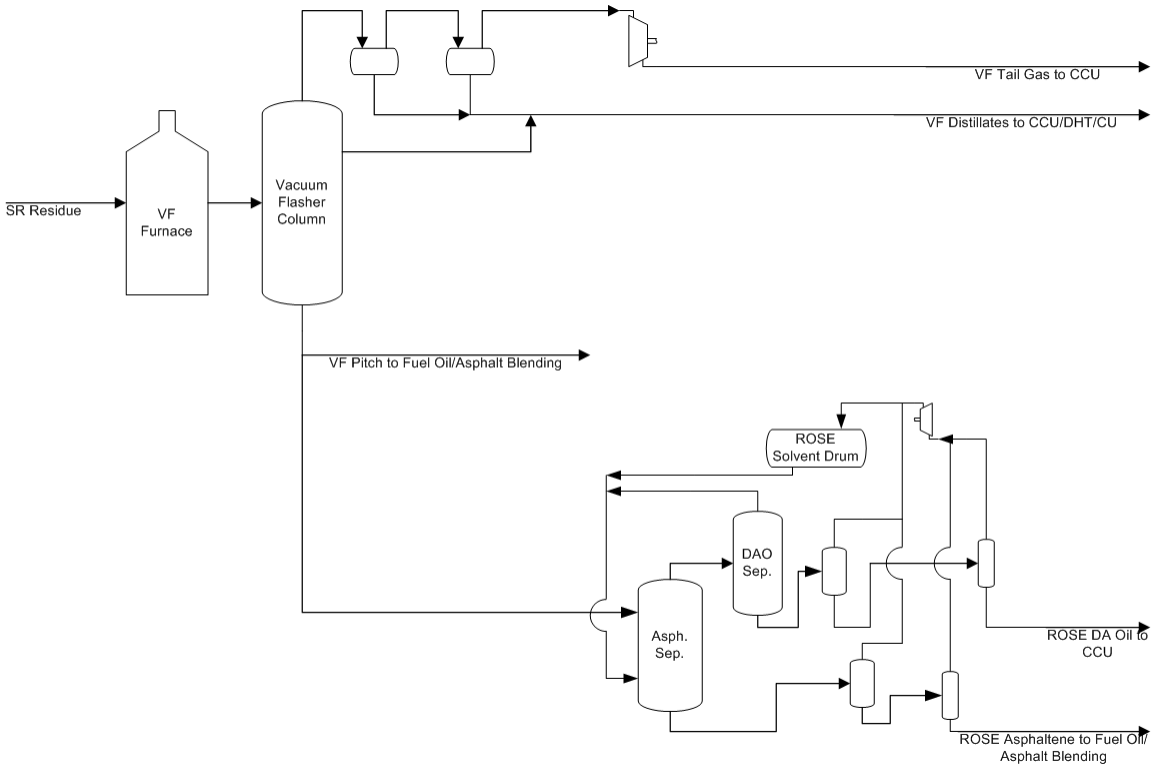

Figure 2-2: Vacuum Flasher and ROSE Unit

2.1.4 **Blending Equipment**

The Primary Crude Oil Processing area includes fuel oil blending. The Primary Crude Oil Processing area also includes equipment to blend hydrocarbon gases produced at the refinery to make refinery fuel gas. If the refinery is short on refinery fuel gas production, purchased natural gas can be blended into the refinery fuel gas. The refinery fuel gas is combusted in the refinery's boilers and heaters. To ensure compliance with H_2S concentration limits, the refinery fuel gas is scrubbed with amine scrubbers and compliance determined with a continuous emissions monitoring system (CEMS).

The refinery amine treating capacity was expanded under OAC 952 in 2006 which approved Amine Treatment Unit 2 (Amine 2). The monthly average 24-month average H2S in fuel gas prior to the installation of Amine 2 was 0.1162 vol% H2S. The enforceable limit of 0.10 vol% H2S in refinery fuel gas in OAC 952 resulted in a 405 lb H2S/day reduction which is equivalent to 139 tpy SO2 emissions. As of this writing, the actual annual average refinery fuel gas H2S content is approximately 5 ppm H2S. Note that with the advent of the 2016 Consent Decree (and Compliance Order 1006-23-08 (CO23)), the refinery fuel gas burned in Heater F-201 is subject to the 40 CFR 60 Subpart J 162 ppmv H2S 3-hour limit; because Heater F-201 burns the common refinery fuel gas, all refinery fuel gas now complies with the 60 Subpart J standard.

2.2 Hydroprocessing

Hydroprocessing generally refers to the catalytic reforming process, which generates byproduct hydrogen gas – and the catalytic treatment of refinery intermediate and product streams to remove unwanted or detrimental nitrogen, sulfur, and oxygen compounds and/or to upgrade the stream to meet specifications.

2.2.1 Catalytic Reformer (CR)

The CR uses a system of fixed-bed catalytic reactors to increase the octane rating of its gasoline-range feed. The reformate product is sent to gasoline component storage for use in fuel blending. The reforming reaction generates hydrogen, which is used in the hydrotreaters. CR catalyst requires periodic regeneration to maintain activity. The regeneration process involves removing coke from the catalyst by combustion and adding chlorine to the catalyst via a chloriding agent. An illustrative process flow diagram is included as Figure 2-3. The facility proposed a feed isomerization unit with the 1993 Clean Fuels project that was only partially constructed. The project equipment that was installed has been managed as part of the CR since that time.

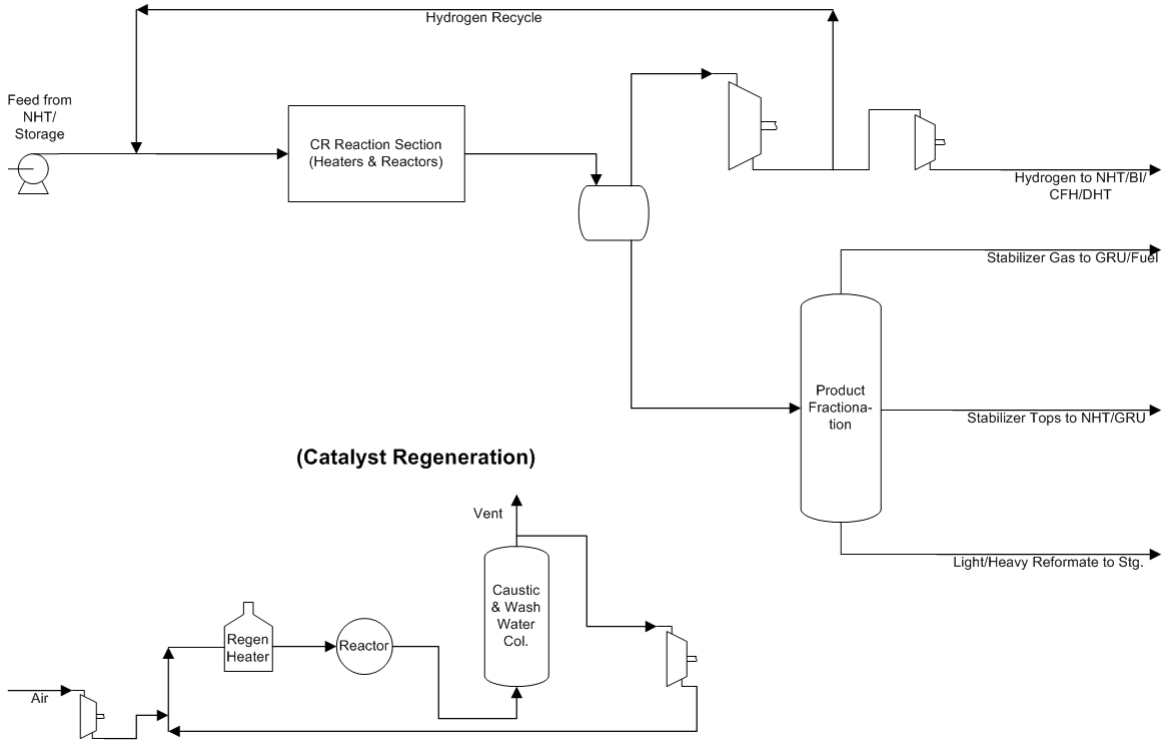

Figure 2-3: Catalytic Reformer

2.2.2 Naphtha Hydrotreater (NHT)

The NHT uses hydrogen and a fixed-bed catalyst to remove contaminants, such as sulfur, from its gasoline-range feed. The hydrotreated gasoline-range product is fed to the CR or used as a gasoline blending component. The NHT is included in a unit boundary with the CR.

2.2.3 Catalytically Cracked Gasoline Splitter (CGS)

The CGS separates light catalytically cracked gasoline from the Gas Recovery Unit into light, middle and heavy fractions. The light fraction is caustic treated and directed to storage/gasoline

blending; the middle fraction is fed to the NHT; and the heavy fraction is fed to the Clean Fuels Hydrotreater (CFH). An illustrative process flow diagram of the NHT and CGS is included as Figure 2-4.

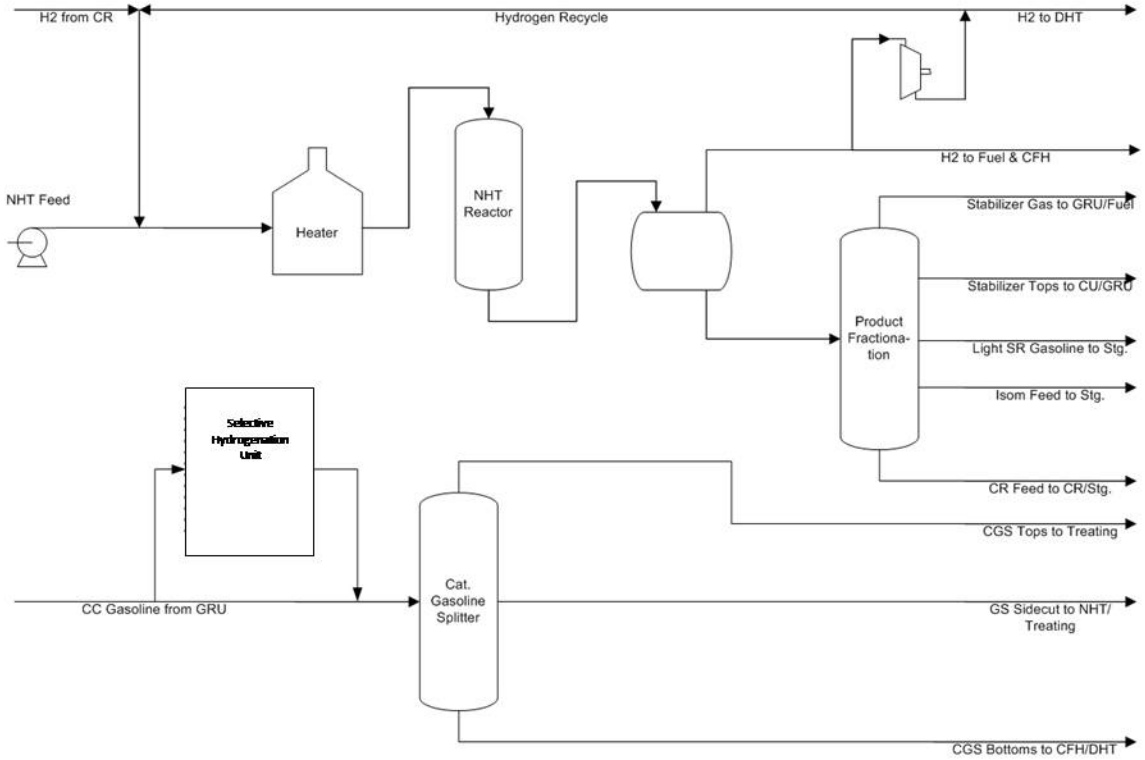

Figure 2-4: Naphtha Hydrotreater & Cat Gas Splitter

2.2.4 **Distillate Hydrotreater (DHT)**

The DHT uses hydrogen and a fixed-bed catalyst to remove contaminants, as sulfur, from its feeds. The hydrotreated product is primarily sold as jet fuel or diesel fuel, depending on the boiling range of the feed.

2.2.5 **Clean Fuels Hydrotreater (CFH)**

The CFH uses hydrogen and a fixed-bed catalyst to remove sulfur contaminants from fuel products prior to blending. An illustrative process flow diagram of the CFH and DHT is included as Figure 2-5.

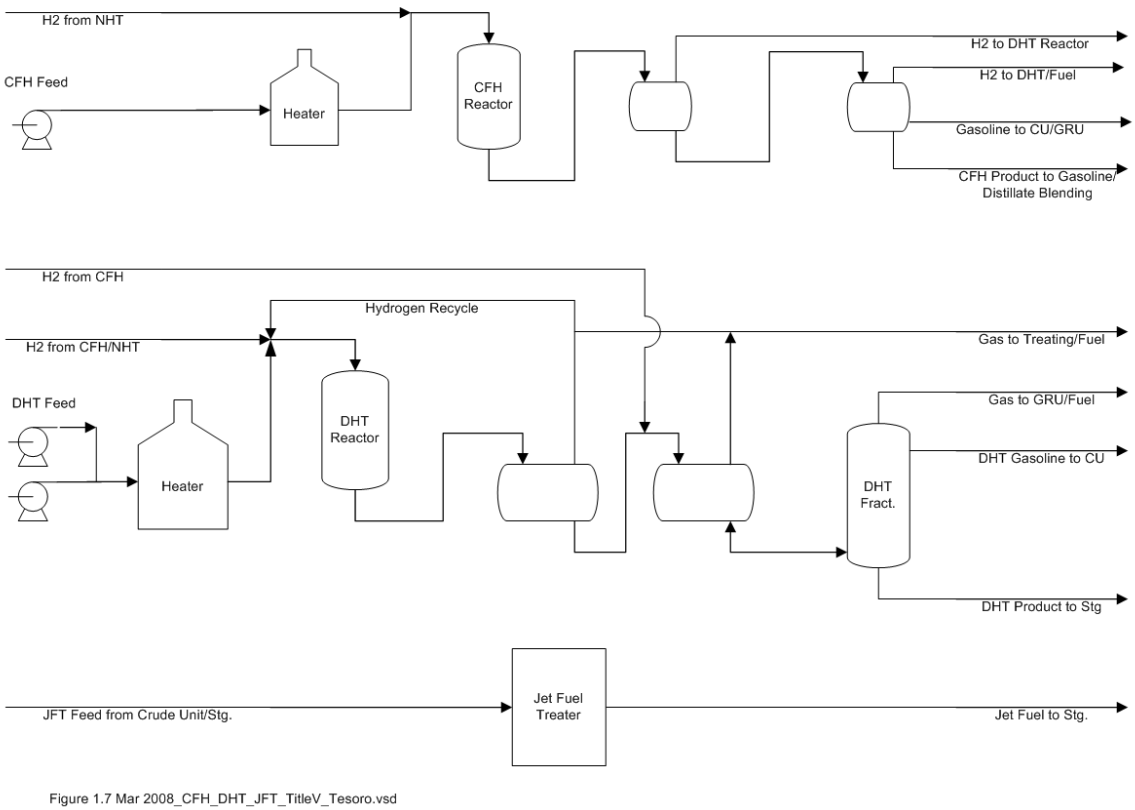

Figure 2-5: Clean Fuels Hydrotreater, Diesel Hydrotreater and Jet Fuel Treater

2.2.6 **Jet Fuel Treater (JFT) unit**

Jet fuel is treated for removal of hydrogen sulfide, mercaptans and naphthenic acids by caustic wash and carbon bed oxidation.

2.3 Catalytic Cracking, Product Fractionation, And Treating

2.3.1 **Catalytic Cracking Unit (CCU)**

The CCU uses a circulating fluidized solid catalyst at elevated temperatures and pressures to convert heavy gas-oil feeds into lighter materials such as gasoline. The majority of the reactor product is fractionated; the fractions heavier than gasoline (gas oils and decanted oil) are sold as fuel oil blending stocks or are processed elsewhere in the refinery. A portion of the gasoline range product is sent to gasoline component storage following treating; the remaining, lighter products are sent to the gas recovery unit for further processing. Coke formed as a reaction product remains on the catalyst and is removed from the catalyst by combustion in the CCU regenerator. Regenerator flue gas is combusted in two carbon monoxide boilers (referred to as CO boilers or COBs), destroying residual organic hazardous air pollutants and generating steam. In the event of a CO boiler outage, the regenerator is switched to total-burn mode for combustion of the CO. As discussed in the section below, exhaust gases from the CO boilers are treated in a flue gas scrubber (FGS; ExxonMobil design). A CCU diversion stack is available to bypass regenerator flue gas to atmosphere during CCU and CO boiler shutdowns, start-ups, malfunctions or other emergency situations. Torch oil is combusted in the CCU regenerator during startup, shutdown, malfunction, and hot standby.

The COBs can be operated without the CCU by using refinery fuel gas as the sole combustion source. An illustrative process flow diagram of the CCU and the sour water strippers is included

as Figure 2-6. The CO boiler flue gas is routed to the flue gas scrubber for particulate matter and sulfur dioxide removal. The scrubbing liquor is sent to the purge treatment unit (PTU) for oxidation and particulate removal.

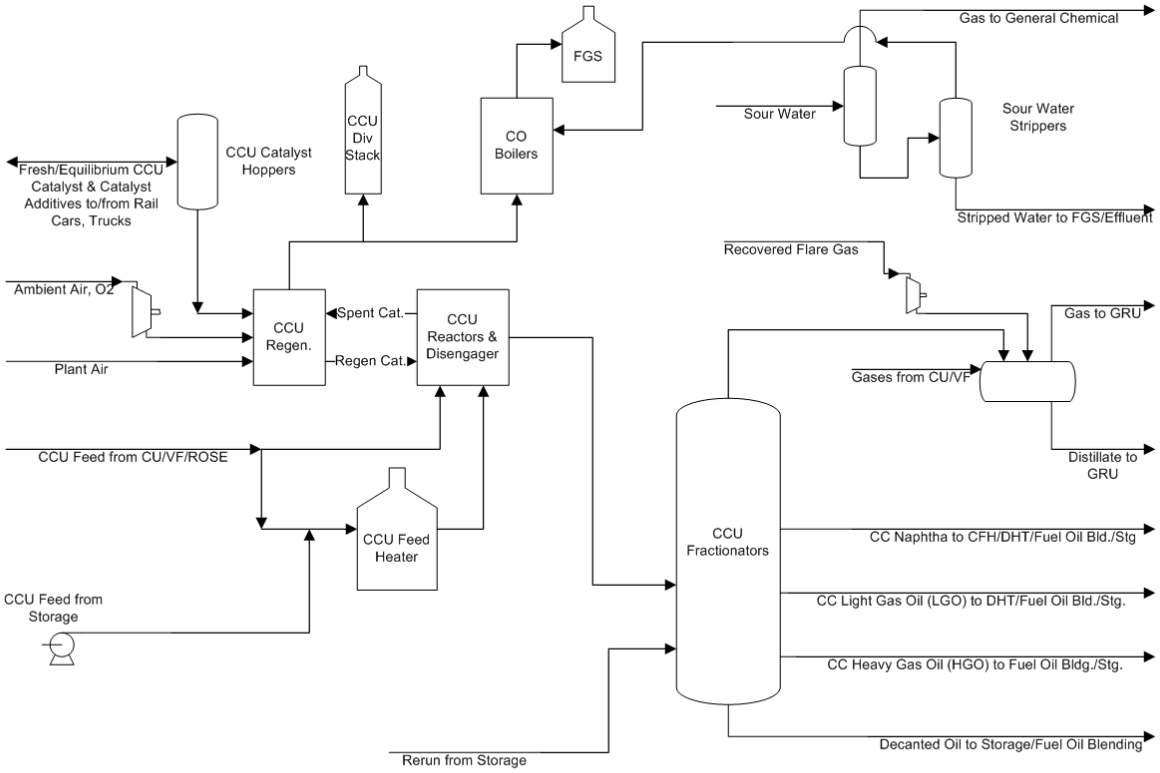

Figure 2-6: Catalytic Cracking Unit and Sour Water Stripper

2.3.2 **Sour Water Stripping (SWS)**

Process water that could contain H_2S ("sour" water) is processed in the sour water strippers. The sour water is normally subjected to two stages of steam stripping. The first-stage stripper vapor, which contains the majority of the H_2S, is normally routed to Chemtrade via pipeline; the second-stage stripper vapor, which contains mostly ammonia and steam, is either burned in the CO boilers or used as feed for the Selective Noncatalytic Reduction (SNCR) installed on COB2. When both CO boilers are down for maintenance, the second-stage stripper vapor is burned in F-751 and/or F-752. The stripped sour water is routed to the flue gas scrubber or the effluent treatment plant.

2.3.3 **Gas Compression and Recovery Unit**

The Gas Compression and Recovery Unit separates gasoline and lighter material into three fractions that are processed elsewhere in the refinery. The primary source of feed is the CCU, but other refinery processes also send similar boiling-range streams to the unit. The three streams produced are: dry gas, which is sent to the fuel gas blender following treating; C_3/C_4, which is fed to the Alkylation plant following treating; and light catalytically cracked gasoline (LCC gasoline), which is sent to gasoline component storage following treating or is fed to the CGS.

The Gas Compression and Recovery Unit also contains a depropanizer that processes an Alkylation plant stream. Its tops stream is sent to LPG storage following treating; its bottoms

stream is recycled to Alkylation. An illustrative process flow diagram of the GRU is included as Figure 2-7.

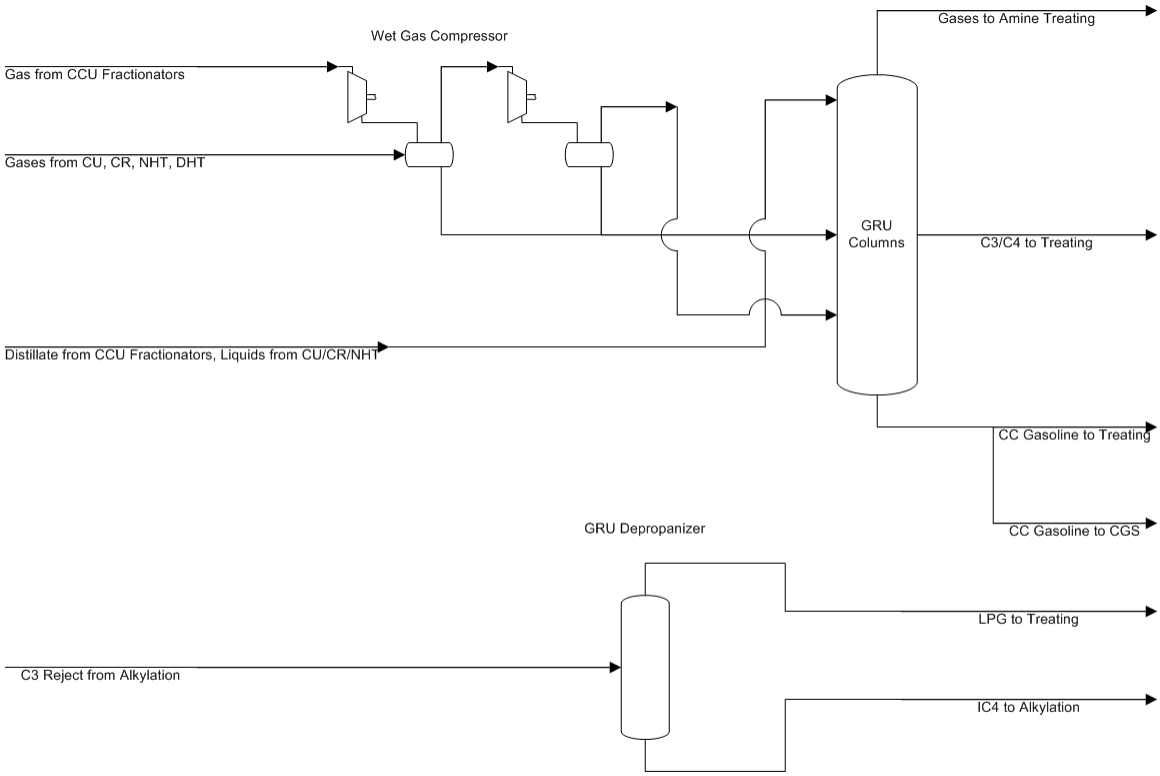

Figure 1.9 Mar 2008_GRU_TitleV_Tesoro.vsd

Figure 2-7: Gas Recovery Unit

2.3.4 **Treating**

Treating process operations remove contaminants from various process streams so that the streams can be used in other refinery processes or blended into finished products.

Solid calcium chloride is used to dry liquified petroleum gas (LPG).

Circulating amine solution (i.e., methyl diethanolamine (MDEA)) is used to remove acid gases, primarily H_2S, from fuel-gas range streams in the refinery and Gas Recovery Unit (GRU) C_3/C_4. The amine treatment system is made up of 6 contactors (C-505, C-524, C-501, C-654, C-1110) associated with different areas of the refinery. In the amine regenerator, recovered acid gases are steam-stripped from the rich amine solution and routed to the adjacent sulfur treatment plant currently operated by Chemtrade, and the stripped (lean) amine solution is recirculated.

A few refinery OACs deal with how sulfur is handled between the refinery and the adjacent sulfur plant. For instance, for projects that assume all generated sulfur will be treated in the sulfur plant, requirements were included to ensure that the generated sulfur could not be trickled in elsewhere in the refinery thereby subtly increasing sulfur emissions at other units. As such, OAC 308a requires the Anacortes Refinery to maintain and submit for approval a Sulfur Curtailment Plan to explicitly state the actions to be followed when the adjacent sulfur plant curtails sulfur acceptance. Accordingly, OAC 952c requires that the refinery report when valve PC5265A is opened (i.e., when the acid gas stream is routed away from the sulfur treatment

plant). In addition, OACs 827c and 952c also mandate refinery fuel gas sulfur content on a 24-hour average and 365-day average, respectively.

Caustic soda is used to remove H_2S and mercaptans from GRU C_3/C_4 and straight-run (SR) butane from the Crude Distillation Unit; it is also used to remove H_2S, mercaptans, and organic acids from CCU gasoline streams. Merox (mercaptan oxidation) treating is also used to convert CCU gasoline mercaptans to disulfides. The majority of spent caustic streams from these treaters are recovered and shipped off-site or treated in the refinery wastewater treatment plant. An illustrative process flow diagram of the Treating operations is included as Figure 2-8.

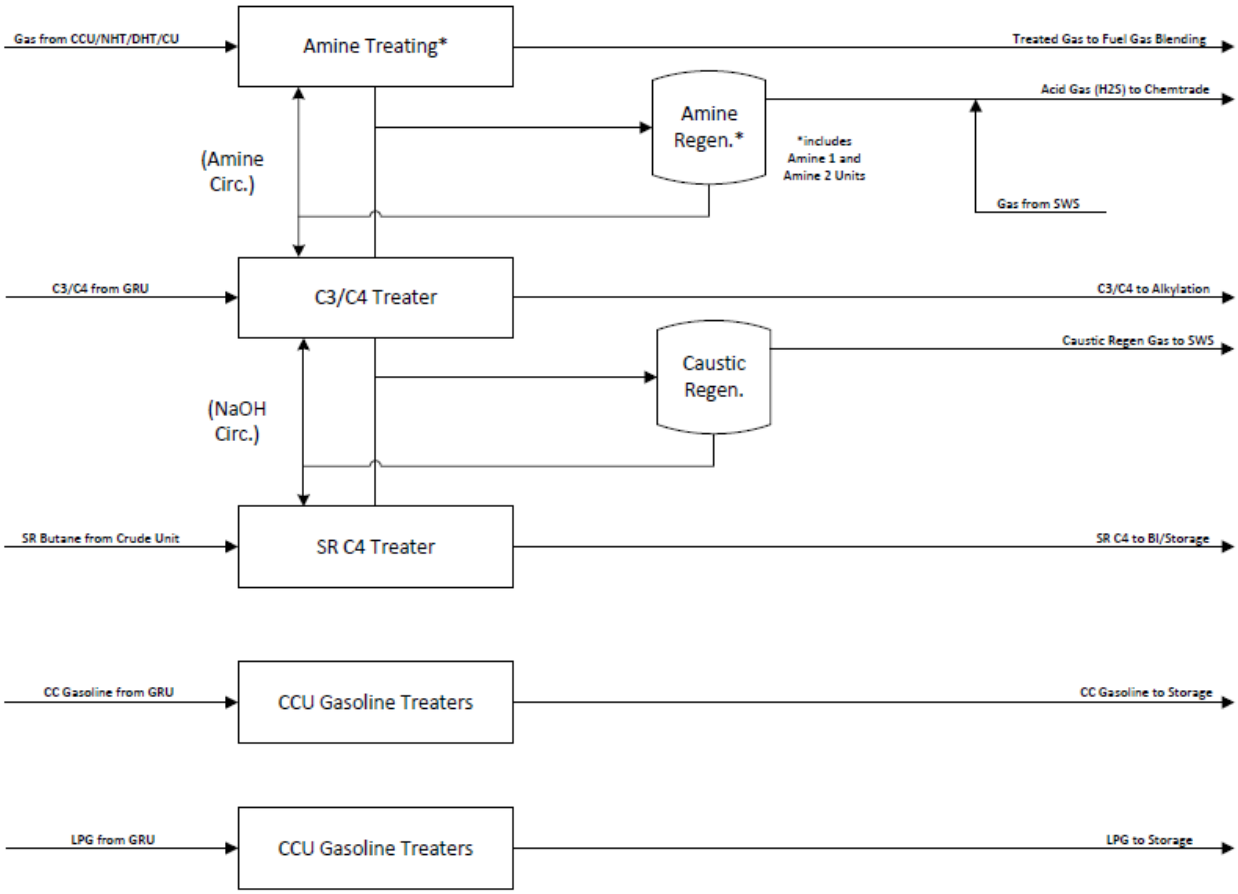

Figure 2-8: Product Treating

2.4 Benzene Saturation (BenSat) Unit & Isomerization Unit

The Benzene Saturation (BenSat) Unit is designed to allow the facility products to meet Environmental Protection Agency (EPA) Mobile Source Air Toxics Phase 2 (MSAT2) gasoline regulations.

Feed to the BenSat unit is a combination of light, benzene-rich reformate, naphtha hydrotreater (NHT) dehexanizer tops, and hydrogen rich makeup gas, all currently produced by the existing catalytic reformer (CR) / NHT units. Reformate from the CR unit is split using the existing fractionator, C-6601. The BenSat reactor is designed to catalytically hydrogenate the benzene into cyclohexane in the stream, bringing the gasoline range product within the EPA fuel specifications.

The goal in the C5/C6 Isomerization reactors (installed in 2018) is to convert normal pentane to iso-pentane and normal hexane to iso-hexane, thus increasing their octane value. Perchloroethylene is injected into the process to promote the reaction and increase isomerate yield. Product from the unit is sent to tank storage for blending. The excess hydrogen from the saturation receiver is sent to downstream hydrotreaters. The stabilizer overhead is treated with caustic in the flue gas scrubber neutralize any acid in the gas so that the vent stream can be sent to the refinery fuel gas system or wet gas compressor.

The Penex Plus unit includes three steam-supplied heat exchangers. The purpose of the exchangers is to provide heat for starting up the unit. Since the hydrogenation and isomerization reactions are exothermic, once the unit is in operation, minimal steam is required.

Figure 2-9 shows the general flow for the Penex Plus unit which contains the BenSat and Isomerization reactors.

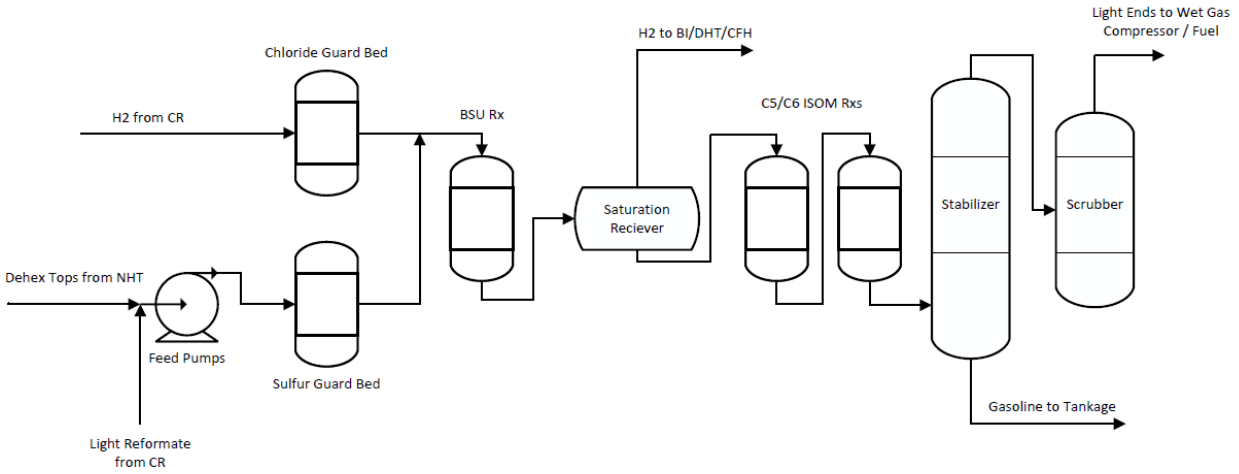

Figure 2-9: Benzene Saturation Unit and Isomerization Unit

2.5 Butane Isomerization

The Butane Isomerization (BI) plant uses a fixed bed catalyst system to convert n-butane in its feed to isobutane. The product isobutane is fed to Alkylation following treating; the remaining n-butane is sent to butane storage. An illustrative process flow diagram of the BI plant is included as Figure 2-10.

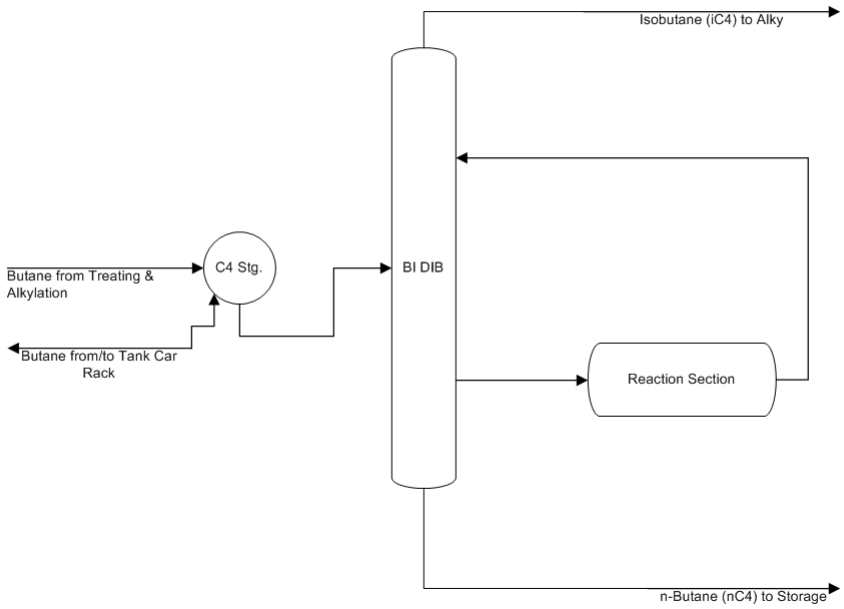

Figure 2-10: Butane Isomerization

2.6 Alkylation

The Alkylation (Alky) plant uses sulfuric acid as a catalyst to make alkylate, a gasoline blending component, from unsaturated light hydrocarbons (contained in the C_3/C_4 stream from the Gas Recovery Unit) and isobutane. Alkylate is sent to gasoline component storage following fractionation and in-plant treating.

A pipeline is used to receive fresh sulfuric acid from Chemtrade and to send spent sulfuric acid back to Chemtrade. In the event of a pipeline malfunction or shutdown of Chemtrade, alternative transportation and/or processing is initiated. An illustrative process flow diagram of the Alky unit is included as Figure 2-11.

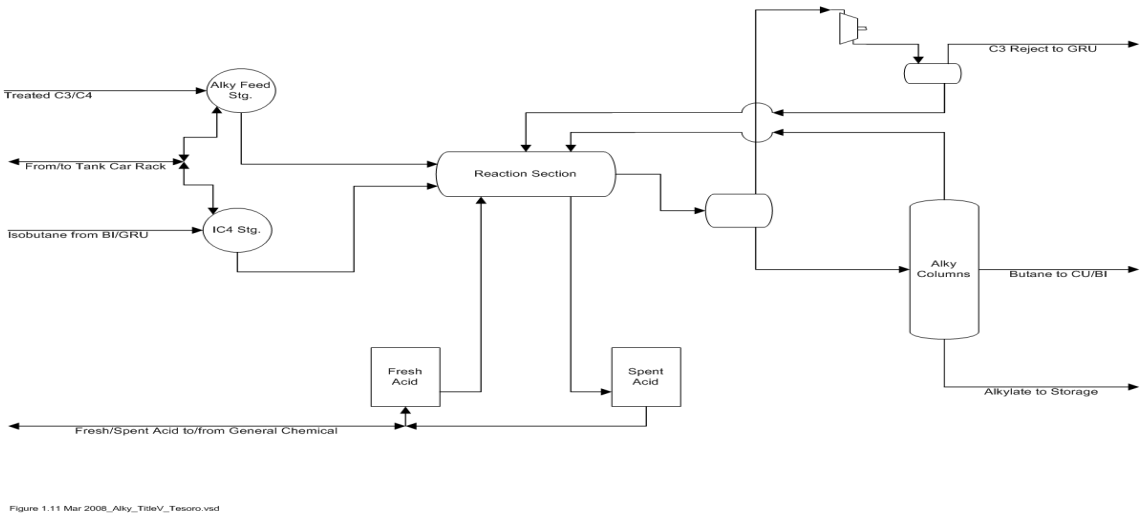

Figure 2-11: Alkylation Unit

2.7 Flares

The purpose of the flare system is to dispose of gaseous hydrocarbons that need to be vented from process equipment. The flares each have a remotely-operated steam injection system to enhance destruction efficiency by improving the mixing of air and waste gases prior to combustion.

In 2015 (OAC 1182), the Anacortes Refinery reworked the flare system by adding a flare gas recovery system (including compressors J-818 & J-819), decommissioning the multi-jet flare (X-819), making the existing main refinery flare (X-813) the primary refinery flare, and cascading operation such that the existing Catalytic Cracking Unit flare (X-814) serves as the refinery's secondary flare. When Flare X-813 is near capacity, flare gas cascades to the CCU Flare X-814 that serves as the refinery's secondary flare. The two liquid ring flare gas recovery compressors are used to route waste gas to the gas recovery unit where it is combined with other gas streams for treatment or is routed to the refinery fuel gas system.

An illustrative process flow diagram of the Flare System is included as Figure 2-12.

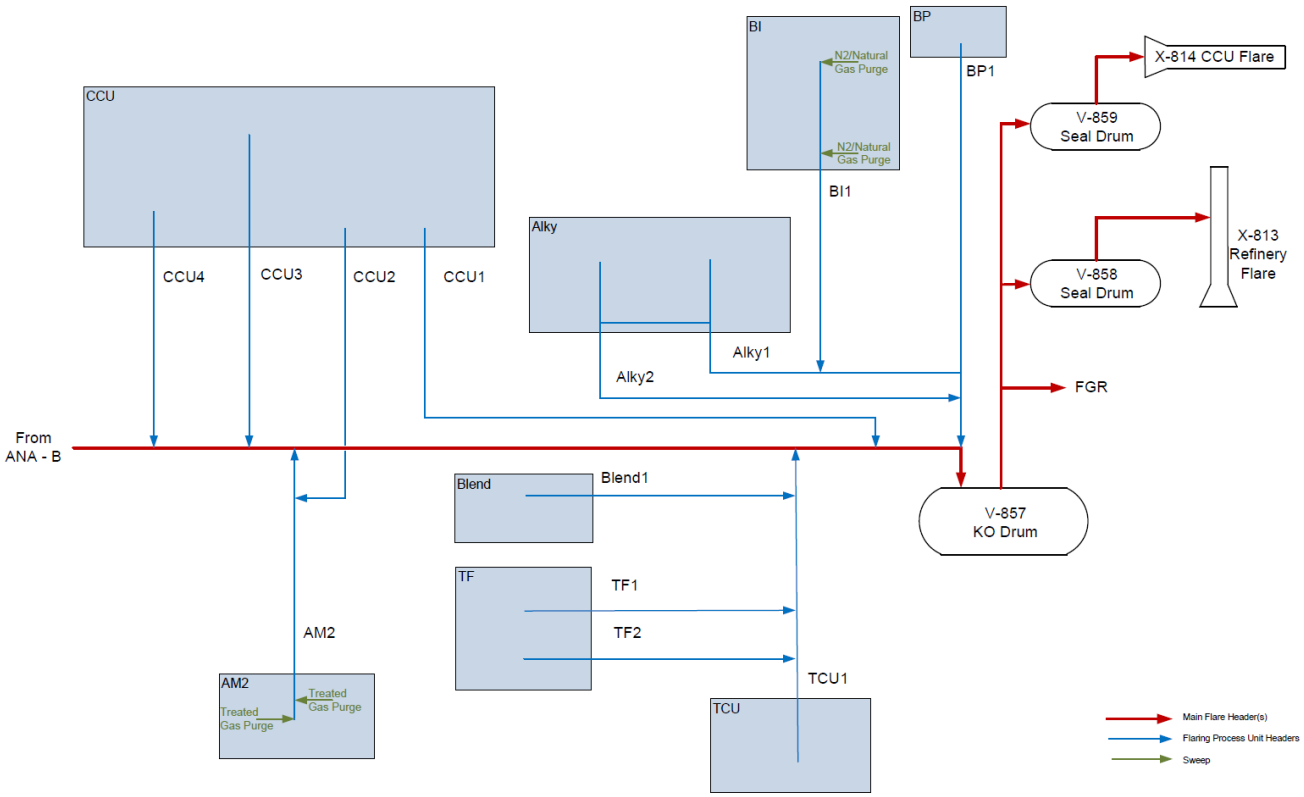

Figure 2-12: Flare System

2.8 Utilities Plant

The Utilities Plant provides steam to refinery process units primarily generated by the three gas-fired utility boilers (F-751, F-752, & F-753). Emission units at the Utilities Plant include the three

utility boilers, and the cooling towers used to condense steam after it cycles through refinery process units.

2.9 Reciprocating Internal Combustion Engines (RICE)

The Anacortes Refinery operates six reciprocating internal combustion engines (RICE) as stationary sources. All are diesel-fired and all are in emergency service.

2.10 Storage, Blending, And Transfer Operations

Raw materials, process intermediates, blending components, process chemicals and additives, and finished products are stored in a variety of storage tanks and vessels at the refinery. Gasoline blending, all petroleum product shipments and receipts, and some of the process chemical/additive shipments and receipts occur outside of the process unit boundary limits. Generally, this area also includes the Truck Rack, Wharf/Logistics Area, LPG Loading Facility, Feedstocks Unloading Facility, Crude Rail Offloading Facility (CROF), Storage Vessels & Tank Farms process units. An illustrative process flow diagram of storage, blending, and transfer operations is included as Figure 2-13.

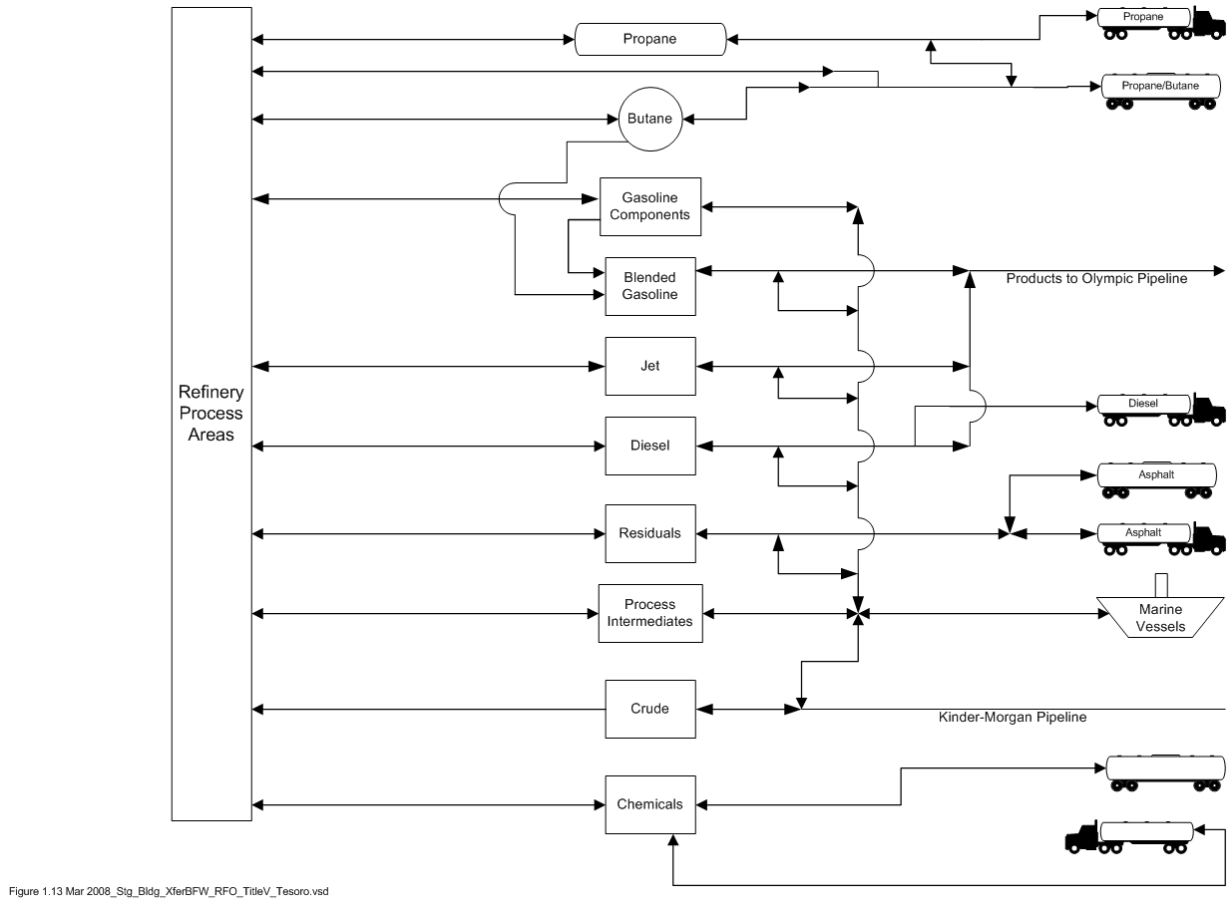

Figure 2-13: Storage, Blending and Transfer

Examples of the modes of transportation employed in movement of petroleum and process chemicals, and the materials moved, include:

- Marine shipments and receipts of crude oil, process intermediates (e.g., CCU feed), blending components and finished fuel products

- Pipeline shipments and receipts of crude oil, finished fuel products, process intermediates, H_2S and spent and fresh sulfuric acid transfers to and from Chemtrade.
- Rail shipments and receipts of crude, LPG, fresh and spent caustic, asphalt binder and catalytic cracking catalysts.
- Truck shipments and receipts of process chemicals, catalysts and additives, fresh and spent caustic/acid.
- Loading of gasoline and diesel into cargo transport tanks at the Truck Rack.
- The gasoline dispensing facility (GDF).

Tesoro contracts out the operation of the SRU for the Anacortes Refinery to the adjacent sulfur treatment complex, currently operated by Chemtrade Solutions LLC (Chemtrade). The SRU (and Sulfuric Acid Plant) are addressed under a separate AOP administered by Chemtrade.

Truck Rack: The Truck Rack is designed with two lanes and a total of four loading positions. Each loading position has three loading arms, for a total of twelve loading arms. Hydrocarbon vapors displaced during loading are captured by a vacuum vapor collection system (VaVaCS) and controlled by a John Zink vapor recovery unit (VRU) using activated carbon adsorption.

Gasoline Dispensing Facility (GDF): The gasoline dispensing facility is an onsite gasoline station used to refill the refinery fleet vehicles. The GDF has the capacity to refuel with both gasoline and diesel from following above ground, fixed roof storage tanks:

- Tank 193 (gasoline) with a nominal capacity of 4,000 gallons
- Tank 194 (diesel) with a nominal capacity of 4,000 gallons

These storage tanks are considered insignificant activities and are included in SOB Table 9-1. The fuel for the GDF is trucked in from the Anacortes Refinery Truck Rack.

2.11 Oily Wastewater Collection and Treatment

The oily wastewater collection and treatment system protects the environment from potentially harmful discharges of waterborne material by treating oily wastewater generated at the refinery. Process wastewater streams, domestic wastewater, and surface runoff from non-process areas are routed through the oily wastewater collection and treatment system. This facility also receives oil/water mixtures from marketing and distribution facilities, and may also receive ballast water from marine vessels.

Process area wastewater is collected in individual drain systems and routed to an oil/water (API) separator system via closed sewers. Treated domestic wastewater is also fed into the API Separator. After the API Separator, the wastewater is routed to clarifiers for further oil/solids removal. The clarified water is then biologically treated in aeration basins to remove the remaining organics. The treated effluent water is then combined with non-process surface runoff (storm water) and is discharged to Fidalgo Bay via an NPDES-permitted outfall. Oil recovered at the Effluent Treatment Plant is recycled to refinery process units; recovered solids are removed, concentrated, and shipped off-site. An illustrative process flow diagram of the Effluent Treatment Plant is included as Figure 2-14.

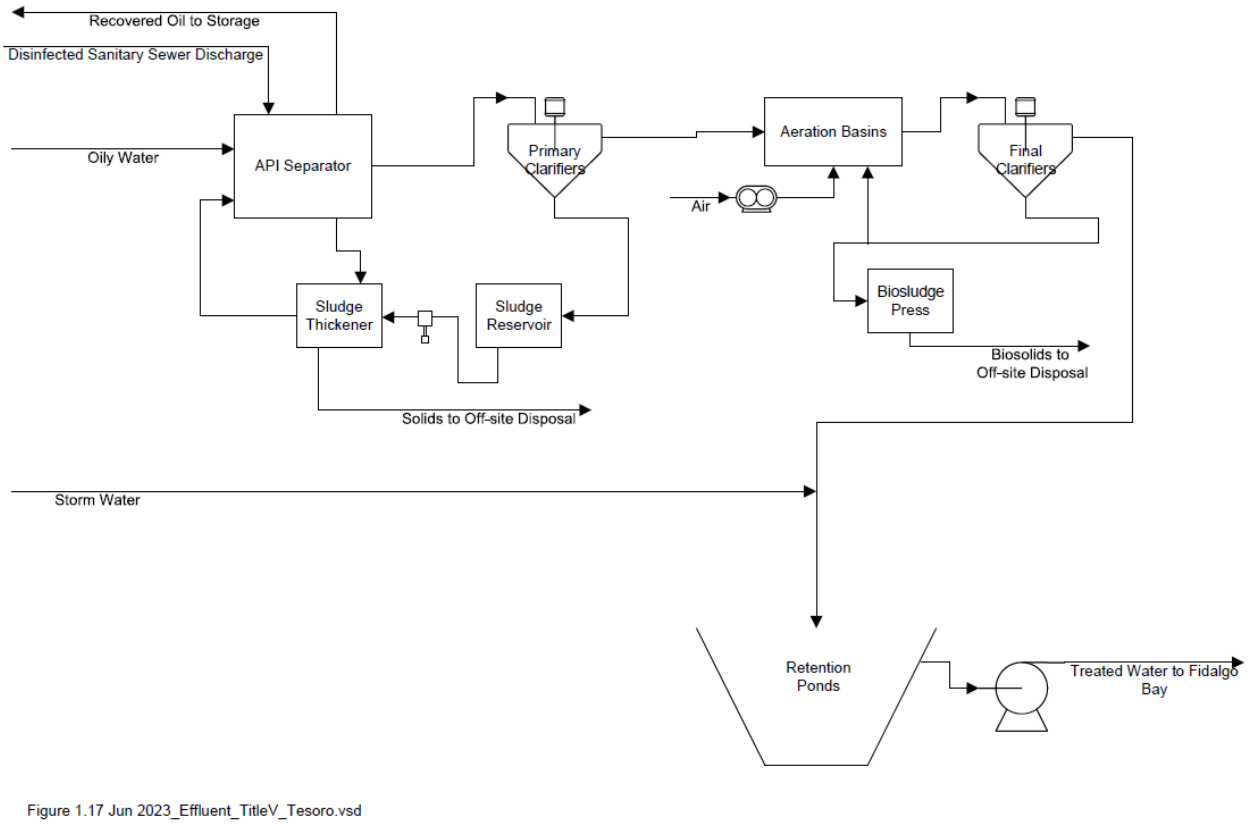

Figure 2-14: Effluent Treatment Plant

2.12 Paint Spray Booth

The paint spray booth is used to paint/repaint materials at the refinery under their equipment maintenance program. The paint spray booth was replaced with a new booth approved under OAC 1353 in 2021.

3. REGULATORY REQUIREMENTS

3.1 Agency Orders

The following Orders, including of Approval to Construct (OAC), Regulatory Orders (RO), Compliance Orders (CO), Prevention of Significant Deterioration (PSD) permits, and Best Available Retrofit Technology (BART) Orders, have been issued to the Anacortes Refinery. Each section below provides further detail regarding the permitting history of the refinery describing each project, any conditions or Orders (e.g., completed Order conditions, superseded Orders) excluded from the AOP, and gap-filling done in the AOP. Those Orders marked with a single asterisk (*) are fully excluded from the AOP for the reasons described. Those Orders marked with a double asterisk (**) are listed in AOP Section 1 with a "(hollow)" notation to indicate that the equipment has been modified and gone through NSR review but the OAC does not contain any ongoing enforceable conditions which is why it isn't seen elsewhere in the AOP.

3.1.1 Orders Issued by NWCAA

***NWCAA OAC 122 (Storage Tank 20 - Floating Roof) issued October 12, 1973**

OAC 122 approved the installation of a floating roof on existing storage Tank 20. The refinery installed the floating roof with primary and secondary seals. This OAC is not included in the AOP because it has no enforceable conditions.

***NWCAA OAC 168 (Deisohexanizer, Naphtha Hydrotreater, Catalytic Reformer including regenerator, Multi-Jet Flare, and Storage Tank 148) issued July 9, 1971**

The OAC included a list of 1971 NWCAA regulations. The current regulations contained in AOP Section 4 and applicable to the subject equipment are more stringent. This OAC was excluded in the original issuance of the AOP and remains excluded for this renewal.

***NWCAA OAC 187 (Crude Tank 165) issued October 22, 1976**

OAC 187 approved a 600,000 barrel crude oil storage tank with floating roof. The OAC is a narrative description of expectations with regard to the refinery notifying the Agency when construction on the project was complete and the expected startup date and stated that the tank was subject to 40 CFR 60 Subpart K. In a letter dated February 28, 1978, the refinery informed the Agency that Tank 165 would be completed and placed into service about April 1, 1978. Because this OAC is in the narrative form, it does not contain any specific conditions that are considered specifically applicable requirements under Title V and is not included in the AOP.

Note that the overlap provisions in 40 CFR 63 Subpart CC mandate that CC Group 1 tanks subject to both 40 CFR 63 Subpart CC and to 40 CFR 60 Subpart K must comply with 40 CFR 63 Subpart CC.

***NWCAA OAC 200 (F-102 Crude Oil Heater Combustion Air Preheater) issued October 14, 1977**

OAC 200 approved installation of a combustion air preheater on crude oil heater F-102. This permit is a narrative description of expectations including the refinery notifying the Agency when construction on the project was complete and the expected startup date. An initial startup notice is assumed to have been completed because the project was constructed. Because this OAC is in the narrative form, it is considered to have no enforceable requirements and is not included in the AOP.

***NWCAA OAC 214 (Crude Tank 166) issued January 17, 1978**

OAC 214 approved a 600,000 barrel crude oil storage tank with floating roof. The OAC is a narrative description of expectations with regard to the refinery notifying the Agency when construction on the project was complete and the expected startup date and stated that the tank was subject to 40 CFR 60 Subpart K. In letters dated November 15, 1978 and December 18, 1978 the refinery informed the Agency that Tank 166 would be completed and placed into service by approximately the end of the year. Because this OAC is in the narrative form, it does not contain any specific conditions that are considered specifically applicable requirements under Title V and is not included in the AOP.

Note that the overlap provisions in 40 CFR 63 Subpart CC mandate that CC Group 1 tanks subject to both 40 CFR 63 Subpart CC and to 40 CFR 60 Subpart K must comply with 40 CFR 63 Subpart CC.

***NWCAA OAC 222 (Oil/Water Separator) issued June 15, 1978**

OAC 222 approved installation of an oil/water separator tank. The Anacortes Refinery cancelled this project so this OAC is not included in the AOP.

***NWCAA OAC 268 (F-201 Vacuum Flasher Feed Heater - Combustion Air Preheater) issued March 25, 1982**

OAC 268 approved installation of a combustion air preheater on Vacuum Flasher Feed Heater F-201. This permit is a narrative description of expectations including the refinery notifying the Agency when construction on the project was complete and the expected startup date. In a letter dated March 29, 1982 the refinery informed the Agency that air preheater would be placed in service in the next few days. Because this OAC is in the narrative form, it is considered to have no enforceable requirements and is not included in the AOP.

***NWCAA OAC 277 (Temporary Replacement Boiler) issued March 19, 1990**

OAC 277 approved operation of a temporary 91 MMBtu/hour gas-fired boiler. The boiler was installed and used at the refinery for about two years. Because the boiler was removed from the refinery, the OAC is considered expired and is not listed in the AOP.

***NWCAA OAC 278 (Catalyst Storage Hopper Vents - Cyclone Separators) originally issued April 14, 1983 and revised April 21, 1983**

OAC 278 approved installation of a cyclone separators on the catalyst storage hopper vents. This permit is a narrative description of expectations including the refinery notifying the Agency when construction on the project was complete and the expected startup date. An initial startup notice is assumed to have been completed because the project was constructed. Because this OAC is in the narrative form, it is considered to have no enforceable requirements and is not included in the AOP.

NWCAA OAC 308a (Improve Energy Utilization at the Crude and Vacuum Flasher Units) originally issued February 20, 1986 and revised October 14, 2009

OAC 308 approved modifications to the Crude and Vacuum Flasher units, revised to OAC 308a on October 14, 2009. The OAC requires the refinery to submit a plan to curtail SO2 emissions when the adjacent Chemtrade's sulfuric acid/sulfur recovery plant curtails the receipt of H_2S from the refinery. Once the plan is approved by the NWCAA, it is required to be followed during H2S curtailments. Under its gap-filling authority, NWCAA mandated reporting of sulfur curtailment periods in the monthly report including a description of the steps taken.

The Anacortes Refinery submitted a sulfur curtailment plan initially on September 15, 1986 (approved on October 16, 1986) with revisions dated May 25, 1995 (approved June 16, 1995), January 16, 2008 (approved June 10, 2008), October 22, 2021 (approved April 14, 2023), and most recently March 13, 2023 (approved April 14, 2023) as presented below.

Tesoro Anacortes Refinery - H_2S Curtailment Plan (dated March 13, 2023)

The following steps shall be taken to mitigate SO2 emissions when Chemtrade curtails sulfur acceptance. The steps shall be taken in general sequence or in another order depending on the severity of the curtailment or other process constraints.

Anacortes Refinery H2S Curtailment Plan

1. Route SWS C-301 tops to V-382/CO Boilers for SO2 abatement via FGS.
2. Reduce CCU reactor temperature.
3. Reduce total CCU Feed.
4. Remove cracked stocks from the DHT & CFH.
5. Bypass dry gas treaters to refinery fuel gas.
6. Switch to a lower sulfur crude diet, if available.
7. Place the DHT on complete recycle.
8. Place the CFH on complete recycle.
9. Open PC 5265 to flare.

Each H2S curtailment is recorded and retained in the files. Curtailments are reported in the monthly air report. Curtailments that may present an emission limit exceedance must be immediately reported to the NWCAA.

NWCAA OAC 358a (Gasoline Tanks 202 and 203) originally issued January 8, 1992 and revised October 14, 2009

OAC 358 and its subsequent revision approved construction of two 175,000-bbl gasoline storage tanks (202 and 203) equipped with external floating roofs (EFR) with primary and secondary seals. Condition 1 of the OAC limits the maximum true vapor pressure of material stored in the tanks to 11.1 psia that is included in the AOP. The tanks must also comply with 40 CFR 60 Subpart Kb – Standards for Performance for Volatile Organic Liquid Storage Vessels.

Pursuant to OAC 358a Condition 2, the Anacortes Refinery notified NWCAA that the project was completed on March 9, 1994. As such, OAC 358a Condition 2 has been completed and is not included in the AOP.

****NWCAA OAC 362b (Wastewater Treatment Plant and Ancillary Facilities) originally issued February 7, 1992 and revised April 25, 2000 and October 14, 2009**

OAC 362 and its subsequent revisions approved circa 1992 modifications to the wastewater treatment plant and its ancillary facilities, specific storage tanks and the marine loading wharf. These modifications were implemented for conformance with 40 CFR 61 Subpart FF (BWON). OAC 362b contains one condition requiring initial notification under 61 Subpart FF. This notification was received by the Agency in 1993. Because OAC 362b only includes a completed notification requirement, it is only listed in AOP Section 1.

NWCAA OAC 390e (Boiler F-753) originally issued April 26, 1993 and revised May 18, 1993, July 12, 1993, October 4, 1993, January 12, 1995 and December 19, 2007

OAC 390 and its subsequent revisions approved construction of Boiler F-753 and ancillary equipment. The boiler is 220 MMBtu/hour gas-fired boiler. The boiler was originally approved to burn both fuel oil and gaseous fuel (i.e., natural gas or propane), however, during construction it was not equipped to burn fuel oil.

The boiler is subject to 40 CFR 60 Subpart Db that requires NOx monitoring using a CEMS unless an alternative method is approved by EPA. An alternative predictive emissions monitoring system (PEMS) was proposed by the refinery and approved by EPA on October 20, 1996. Eventually, the NOx PEMS was replaced by a CEMS as part of an enforcement action. During OAC revision "e" the approval for the boiler to burn fuel oil was removed and NOx monitoring using a CEMS was required.

For the opacity requirement in Condition 1, NWCAA used its gap-filling authority to mandate that Boiler F-753 be monitored within the refinery-wide opacity monitoring program in AOP Term 6.1.

Condition 5 mandates that Boiler F-753 only burn purchased natural gas or propane to limit sulfur dioxide emissions. Under its gap-filling authority, NWCAA required the Anacortes Refinery maintain a record of the type of fuel combusted in the boiler to demonstrate compliance with this sulfur dioxide requirement.

***NWCAA OAC 517b (Butane Isomerization Unit) originally issued September 7, 1994 and revised September 23, 1994 and November 4, 1994**

OAC 517 approved construction of the Butane Isomerization unit (BI). The order outlined regulations applicable to the BI. OAC 517 included the approved new storage tanks. However, the storage tanks were removed from the order during a subsequent revision because they were not constructed. OAC 517b was superseded by OAC 1031 issued June 19, 2009 and is not including in the AOP.

NWCAA OAC 633a (Equilibrium Catalyst Addition System) originally issued January 28, 1998 and revised March 3, 2006

OAC 633 and its subsequent revision to OAC 633a approved a modification to the catalytic cracking unit (CCU), consisting of a new equilibrium catalyst addition system, a new catalyst hopper, a baghouse filtration system (BACT), controls, and associated piping. The project did not impact unit throughput capacity or product yield of the CCU. The revision aligned the provisions of the equilibrium catalyst hopper V-353 with other more recent permit conditions applicable to similar sources.

****NWCAA OAC 649b (Asphalt Binder Project) originally issued March 17, 1998 and revised May 7, 2001 and October 14, 2009**

OAC 649 and its subsequent revisions approved the construction of a project to manufacture asphalt binder, the hydrocarbon component of commercial asphalt pavement. The project involved taking existing asphaltic streams and blending them with cutter stock. The final product is transferred into trucks and railcars at newly constructed truck loading and railcar loading racks. In addition, a new transfer line was installed to the wharf for loading asphalt materials into barges. Modifications to the heat exchanger trains at the Crude and Vacuum Flashing units were made and five new oil/water sewer system connections were installed triggering 40 CFR 60 Subpart QQQ. The project also included construction of two 20,000 barrel heated fixed roof tanks: Tank 248 for asphalt cutter and Tank 247 for asphalt/cutter blending. In addition to the two new tanks, the project included switching service of two existing tanks. Tank 34 was switched from marine fuel oil to

asphalt binder storage to provide asphalt binder loading surge capacity, and Tank 36 was made available for asphalt binder storage on an as needed basis.

OAC 649b Condition 1 requiring the initial performance test for Tanks 247 and 248 was completed on July 29, 1998. The Anacortes Refinery notified NWCAA on July 10, 1998 that the project is complete; therefore, OAC 649b Condition 3 is completed.

Under OAC 1190, the refinery constructed a Feedstock Unloading Facility to unload CCU feedstock from railcars. The project included converting Tanks 247 and 248 from fixed roof tanks to internal floating roof (IFR) tanks. Commercial grade asphalt production was discontinued with this project. OAC 649b contains one ongoing requirement that is no longer applicable. Condition 2 of the order states; "Opacity from the truck and rail car racks and from the barge loading of asphalt shall not exceed 20 percent, three-minute average, at any time.". Because asphalt is no longer produced or transferred at the refinery, this requirement is invalid and not included in the AOP.

While the refinery no longer commercially produces asphalt and Tanks 247 and 248 have been modified under OAC 1190 hence making OAC 649b obsolete for those tanks, OAC 649b still applies to the other equipment installed as part of the asphalt binder project (e.g., oily water sewer connections). Because OAC 649b only includes completed requirements, it is only listed in AOP Section 1 for those other pieces of equipment in the asphalt binder project.

****NWCAA OAC 651a (Pressure Vessels 134 and 135) originally issued March 16, 1998 and revised October 14, 2009**

OAC 651 approved construction of two new pressure vessels (134 and 135) in the Diesel Hydrotreater (DHT) unit. For BACT, the Agency relied on federal LDAR requirements for fugitive equipment component leaks. OAC 651a has no requirements beyond an initial startup notice. The startup notice was received by the Agency on April 29, 1998. Because OAC 651a only includes a completed notification requirement, it is only listed in AOP Section 1.

****NWCAA OAC 705 (Jet Fuel Treater) issued August 10, 1999**

OAC 705 approved construction of the Jet Fuel Treater (JFT) process unit. The OAC refers to the new process unit as the Merichem Mericat II process which is the proprietary name of the process used in the JFT.

Conditions 1 and 2 use the language “are subject to the applicable sections of….”. In essence, these conditions are hollow and do not add anything that is not already required directly by the referenced federal rules. As such, they are not enforceable requirements.

Condition 3 is a requirement for a startup notice. The JFT was constructed and the startup notice submitted. The last sentence of Condition 3 is considered superfluous and vague, and therefore not an enforceable requirement. Because OAC 705 only includes a completed notification requirement, it is only listed in AOP Section 1.

***NWCAA OAC 725b (Flare Gas Recovery Compressor) originally issued June 12, 2000 and revised September 24, 2002 and July 10, 2007**

This approval allowed construction of a 500 scfm two-stage rotary vane flare gas recovery compressor (J-887) replacing the less efficient compressor (J-815), which remained as a maintenance backup unit until 2007. The J-887 compressor is equipped with a heavy oil barrier fluid seal system; the project included associated valves, flanges and other components. The valves, flanges, and other components are considered part of the existing closed vent system and are included in the refinery’s monitoring of the flare system. The application states that the project does not alter the throughput capacity of any other

process units at the refinery. Revision a allowed for both compressors to operate during ROSE unit compressor maintenance. Revision b reflects decommissioning of compressor J-815.

Compressor J-887 was decommissioned as part of the flare gas recovery system upgrade approved under OAC 1182. As such, OAC 725b is not included in the AOP.

NWCAA OAC 744a (Residuum Oil Supercritical Extraction - ROSE) originally issued March 7, 2001 and revised March 3, 2009

OAC 744 and its subsequent revision approved construction of Residuum Oil Supercritical Extraction (ROSE) unit designed to upgrade heavy residual oils to Catalytic Cracking Unit (CCU) feed. The project was part of a residue reduction project that included modifications to the CCU. The CCU modifications were approved under OAC 753 and its revisions and were considered contemporaneous with the ROSE project for applicability of Prevention of Significant Deterioration (PSD). OAC 744 revision "a" removed a number of one-time only conditions that had been met including the initial startup notice.

OAC 744a Condition 2 requiring the ROSE unit not to exceed ch 173-460 WAC (NSR for toxic air pollutants (TAPs)) was retained but is not included in the AOP because the requirement was met at the time of permitting and there is no ongoing compliance requirement.

****NWCAA OAC 750a (New Crude Oil Pump) originally issued May 4, 2001 and revised October 14, 2009**

OAC 750 approved construction of crude oil pump installed in the tank farm. It also addressed an increase in heating capacity of EFR Tank 3. The goal of the project was to improve crude oil storage flexibility and transfer operations with a potential increase in crude oil throughput at the Crude Unit from 143 to 149 thousand barrels per day. BACT for the project was considered the federal applicable LDAR requirements under 40 CFR 63 Subpart CC.

The OAC has no requirements aside from an initial startup notice that is assumed to have been completed. Because OAC 750a only includes a completed notification requirement, it is only listed in AOP Section 1.

***NWCAA OAC 753d (Catalytic Cracking Unit operation) originally issued December 14, 2001 and revised April 4, 2002, November 24, 2003, and August 6, 2004**

OAC 753 approved modification of the catalytic cracking unit (CCU) from a combination fluidized bed reactor and riser reactor to a unit with two riser reactors. The project also included revisions to the CCU fractionator 2 and installation of sulfur dioxide control equipment and a catalyst cooler for heat recovery. The catalytic cracker regenerator's combustion air supply is enriched with oxygen. This OAC series was superseded by OAC 946/946a so is not included in the AOP.

***NWCAA OAC 765 (12 Diesel Generator Engines) issued April 23, 2001**

OAC 765 approved the temporary installation of 12 diesel-fired generator engines. The engines were decommissioned prior to August 31, 2001 as required by the OAC. Emissions from the project were mitigated under a SEPA MDNS. OAC 765 is not included in the AOP because the engines have been removed.

***NWCAA OAC 768 (1 Diesel Generator Engine) May 15, 2001**

OAC 768 approved the limited use of a 465 hp, diesel-fired generator engine (GEN-763). The OAC limited use to a total of 200 hours. In 2010, the refinery submitted a revision request to increase the allowable operating hours. The regulations in affect in 2010 allowed

the operation of emergency generators for up to 500 hours per year without NSR. OAC 768 was rescinded on September 2, 2010 because the generator is categorically exempt from NSR. Note that GEN-763 is still in service at the Boilerhouse and is subject to 40 CFR 63 Subpart ZZZZ.

***NWCAA OAC 769c (18 Gas-Fired Generators and a Propane Vaporizer) originally issued May 23, 2001 and revised November 28, 2001 and April 21, 2003**

These generators were installed and subsequently removed from the refinery. The generators were used in response to the Western U.S. energy crisis of 2000 and 2001. OAC 769 is not included in the AOP because the equipment has been removed.

NWCAA OAC 827c (Phase 1 Low Sulfur Gasoline Project) originally issued May 22, 2003 and revised February 16, 2005, June 2, 2009, and July 6, 2023

The Phase 1 Low sulfur gasoline project included modifications of the cat gasoline splitter (CGS), F-104 reboiler, naphtha hydrotreating (NHT) catalytic reformer (CR), and amine treatment unit (ATU). Requirements of 40 CFR 60 Subpart GGG and 40 CFR 63 Subpart CC apply to equipment components installed as part of this project. BACT requirements for equipment leaks are enhanced LDAR based on 40 CFR 60 Subpart VV.

OAC 827c Condition 1 restricts fuel use in the F-104 reboiler, the F6600 and F6601 heaters, and the F6650, F6651, F6652, F6653, and F6654 heaters to pipeline grade natural gas, and/or refinery fuel gas. However, these units are not capable of burning any other fuels at the time of permitting and would require permitting for the modification. There are no compliance provisions for this restriction; therefore, the condition has not been included in the AOP.

***NWCAA OAC 873 (Flue Gas Scrubber on the Catalytic Cracking Unit) issued August 24, 2004**

OAC 873 approved installation of a flue gas scrubber on the CCU under NWCAA 300.13 - Substantial Alteration of Control Equipment. OAC 873 was superseded by OAC 946/946a so is not included in the AOP.

NWCAA OAC 896a (Phase 2 Low Sulfur Gasoline Project) originally issued December 24, 2004 and revised March 3, 2009

OAC 896 approved a Phase 2 Low Sulfur Gasoline (LSG) project that involved modifications to the cat gasoline splitter (CGS) and converted the Cat Feed Hydrotreater to the Clean Fuels Hydrotreater (CFH). The emissions were contemporaneously evaluated with OAC 827a (LSG Phase 1). The project was completed and the process units restart in October 2005. The OAC 896a revision aligned the LDAR program for refinery consistency.

NWCAA OAC 901a (Ultra-Low Sulfur Diesel Project) originally issued February 1, 2005 and revised March 3, 2009

OAC 901 approved modifications to the existing Distillate Hydrotreater (DHT) unit so that the refinery could produce ultra-low sulfur diesel as mandated by the EPA. Following completion of the project, the DHT restarted in March 2006. OAC 901a revisions included updating enhanced LDAR provisions for consistency and removing one-time only requirements that had been met. Initial LDAR monitoring was completed in 2006 and off-plot equipment was incorporated into existing LDAR programs.

NWCAA OAC 946c (Catalytic Cracking Unit operation) originally issued November 15, 2005 and revised April 6, 2006, January 26, 2011, and February 16, 2024

OAC 946 superseded OAC 753d and OAC 873. Applicable conditions from both OACs were consolidated and updated to reflect the current CCU operating configuration with a flue gas

scrubber (FGS). OAC 946a aligned the conditions of the catalyst additive hopper V-356 with OAC conditions applicable to the other catalyst hoppers at the refinery. The original approval for construction of the catalyst additive system was granted under OAC 753, issued in 2001. BACT was determined at that time to be the installation of a baghouse.

OAC 946b aligned the quality assurance requirements for the CEMS and reporting with the current NWCAA Section 367 and Appendix A. This revision also removed the initial source test requirement for PM_{10} at the FGS, which was completed on March 7, 2006.OAC 946b superseded OAC 946 and OAC 946a.

OAC 946c deleted conditions where Tesoro had applied for and NWCAA granted a discontinuance of the compliance demonstration. Also, it removed duplicative CEMS recordkeeping and reporting requirements. In addition, the compliance demonstrations for NOx and CO were converted from annual testing to CEMS.

NWCAA OAC 947 (Catalytic Cracking Unit Catalyst Hopper Control) issued December 19, 2005

OAC 947 approved the replacement of two existing cyclones with new baghouses on catalyst hoppers (V-307 and V-308) in the catalytic cracking unit (CCU). These hoppers were originally installed in 1955 and upgraded in 1983 and 1984 by addition of cyclone separators and an equalizing line to meet NWCAA particulate emissions regulations. Hopper V-307 is used to receive and storage of fresh CCU catalyst offloaded from rail cars by pneumatic transfer. Hopper V-308 receives spent catalyst from the CCU regenerator, also by pneumatic transfer. The hopper cyclones were replaced by passive baghouses for control of particulate matter during transfer operations. The baghouses are equipped with differential pressure gauges. The gauges are to be available for diagnostic purposes in the event of observed excess emissions.

NWCAA OAC 952c (Modifications to Amine and Sulfur Treatment) originally issued March 31, 2006 and revised May 15, 2007, March 3, 2009, and July 6, 2023

OAC 952 allowed the modification of the amine treatment unit expanding sulfur capacity and the installation of a sulfur recovery unit at the facility. The 2007 revision abandoned the construction of the SRU and replaced the required capacity with an expanded line to access the available capacity at the adjacent sulfuric acid/sulfur recovery plant (currently operated by Chemtrade). The project included a process vent and equipment components subject to 40 CFR 63 Subpart CC. Equipment components are also subject to 40 CFR 60 Subpart GGG provisions in conjunction with enhanced LDAR provisions under the BACT determination.

OAC 952a included a one-time requirement to test F-751 and F-752 utility boilers to establish NO_X emissions factors. Testing was completed in October 2007 and the test requirement was removed from the OAC during revision "b". The NO_X emissions from the project exceed 50% of the PSD significance emissions rate triggering 40 CFR 52.21(r)(6) monitoring and annual reporting to the NWCAA for 5 years from project startup (OAC 952a; condition 9 – which was retained in OAC 952b as condition 5). The OAC 952b revision also changed LDAR requirement for consistency.

OAC 952c updated the LDAR requirement for consistency with the rest of the refinery; deleted reasonable possibility monitoring reporting as no longer necessary; added recordkeeping regarding the H2S content in the fuel gas drum; deleted ability to burn fuel oil; and deleted duplicative CEMS reporting.

NWCAA OAC 989b (Selective Hydrogenation Unit) originally issued June 7, 2007 and revised March 3, 2009 and April 13, 2023

OAC 989 approved construction of the Selective Hydrogenation Unit (SHU). The SHU processes CCU gasoline prior to hydrotreating. The unit is within Zone A and processes CCU debutanizer bottoms in route to the CGS column. Equipment components are subject to 40 CFR 63 Subpart CC and 40 CFR 60 Subpart GGG provisions in conjunction with enhanced LDAR provisions under the BACT determination. The enhanced LDAR provisions were the subject of the 2009 revision OAC 989a and then the 2023 revision OAC 989b to coordinate the refinery-wide LDAR program.

Construction of the SHU included the installation of process sewer components subject to 40 CFR 60 Subpart QQQ.

***NWCAA OAC 1009c (Temporary Boiler) originally issued October 10, 2007 and revised November 10, 2010 and January 31, 2010**

OAC 1009 approved the use of a temporary boiler at the refinery during a planned boiler outage. The 146 MMBtu/hour heat input, natural gas/propone fired boiler was removed from the refinery prior to OAC 1009c expiring on December 31, 2011. The OAC is not including in the AOP because it is expired.

****NWCAA OAC 1031a (Butane Isomerization Unit) originally issued January 20, 2009 and revised April 13, 2023**

OAC 1031 approved an optimization project at the Butane Isomerization Unit (BI) to increase the unit's throughput along with a commensurate increase in steam consumption. OAC 1031 superseded OAC 517b that was in the original series approving construction of the BI. Refinery heaters are no longer capable of firing fuel oil; references to burning fuel oil were removed in revision to OAC 1031a.

Following completion of the project, the BI restarted on February 2, 2009 as stated in the refinery's written startup notice. Because OAC 1031a only includes a completed notification requirement, it is only listed in AOP Section 1.

NWCAA OAC 1037b (Benzene Saturation Unit) originally issued June 19, 2009 and revised April 13, 2023

OAC 1037 approved the construction of a new process unit (BenSat) to reduce the benzene content in gasoline blending components to meet the EPA mobile source air toxics phase 2 (MSAT2) requirements. In addition to the new BenSat unit, the project involved restarting reformate splitter column C-6601 and its associated 73.5 MMBtu/hour Heater F-6602. The column and heater had been mothballed 2004.

OAC 1037 approved the use of refinery fuel gas in Heater F-6602. However, refinery fuel gas was not connected to the heater and OAC 1037b was issued to reflect the heater may only fire natural gas. Note that the application associated with OAC 1037a was withdrawn and OAC 1037a was not issued. If the facility is interested in firing the heater on refinery fuel gas in the future, an OAC revision and reassessment of BACT is required under New Source Review.

****NWCAA OAC 1050a (Isomerization Feed Preparation Unit) originally issued May 4, 1993 and revised October 30, 2009**

The original OAC issued May 4, 1993 had no OAC number. Upon revision, it was assigned OAC 1050a. The project approved modifications to the Naphtha Hydrotreater (NHT) to prepare Isomerization feed and the construction of a new a 100,000 barrel, external floating roof (EFR) tank to store naphtha (Tank 231). The OAC has no requirements aside from an

initial startup notice that is assumed to have been completed because Tank 231 was constructed. Because OAC 1050a only includes a completed notification requirement, it is only listed in AOP Section 1.

****NWCAA OAC 1101 (Crude Railcar Offloading Facility) issued November 5, 2011**

OAC 1101 approved construction of the Crude Railcar Offloading Facility (CROF) comprised of an offloading rack utilizing a set of four parallel tracks for positioning railcars during the offloading of crude oil. The order has a single condition that requires a notice of startup for the CROF. The notice was received on September 10, 2012, stating that CROF startup occurred on September 4, 2012. OAC 1101 is not included in the AOP because the startup notice has been received and there are no ongoing requirements in the order.

NWCAA OAC 1171a (Truck Rack) originally issued June 13, 2014 and revised April 14, 2023

OAC 1171 approved the construction a truck rack for loading diesel and gasoline products into truck cargo tanks. The approved project also included four new storage tanks and a new ethanol railcar unloading pad. The project was constructed with only three of the four approved tanks. The constructed tanks are:

Tank 1406: 10,000 barrel fixed roof tank for the storage of diesel (Diesel Day Tank)

Tank 1407: 20,000 barrel IFR tank for the storage of gasoline (RUL Day Tank)

Tank 1408: 10,000 barrel IFR tank for the storage of ethanol (Ethanol Tank)

The approved tank that was not constructed is a 10,000 barrel IFR tank for the storage of gasoline (PUL Day Tank). OAC 1171a was issued to remove the PUL Day Tank that was not constructed, remove completed conditions, and revise reporting requirements.

OAC 1171a requires secondary seals on IFR Tanks 1407 and 1408 as BACT, beyond what is required under 60 Subpart Kb or 63 Subpart CC. The OAC also limits what type of materials that can be stored in each tank (i.e., Tanks 1406, 1407, & 1408). OAC 1171a does not require the facility to document compliance with the tank seal or material storage limitations, so a requirement to keep records in this regard has been gap-filled in the AOP. In addition, the monitoring, recordkeeping, and reporting for the Truck Rack control system operation is gap-filled to be compliance with the VOC limit in OAC 1171a.

NWCAA OAC 1182 (Flare Gas Recovery) issued May 30, 2014

OAC 1182 approved construction of a new flare gas recovery system for the refinery consisting of two new liquid ring flare gas recovery compressors (J-818 and J-819) that replaced the previous flare gas recovery compressor (J-887). The project reduced the amount of waste gas flared at the refinery and realigned flaring so that main refinery flare (X-813) serves as the refinery's primary flare that cascades to the Catalytic Cracking Unit flare (X-814) that serves as the refinery's secondary flare.

Condition 1 of OAC 1182 requires that new components installed as part of the project located at the flare area, Catalytic Cracking Unit, and Alkylation Unit be monitored using a LDAR program consistent with Subpart GGGa/VVa. The project triggered Subpart GGGa/VVa directly for the two new flare gas recovery compressors and for all components at the Alkylation Unit. This requirement has been incorporated into the AOP.

Condition 2 of OAC 1182 is a one-time requirement to notify the Agency of startup after the project is complete. The startup notice was received October 27, 2015 stating that startup of the new flare gas recovery system occurred on October 21, 2015. Because Condition 2 has been completed, it is not included in the AOP.

The 2015 startup notice included a statement that the old Multi-jet flare (X-819) was abandoned in place and, as such, the Multi-jet flare (X-819) has been removed from the AOP. According to the OAC 1182 worksheet, compressor J-887 was decommissioned during the flare gas recovery project approved under OAC 1182 and compressor J-887 has been removed from the AOP along with OAC 725b that was the approval order for that compressor.

NWCAA OAC 1184 (Crude Heater F-101 Low-NOx burners) issued November 26, 2014

OAC 1184 approved the installation of low-NOx burners in Crude Heater F-101. The heater was originally constructed in 1955. In 1994, low NOx burners were installed on the heater for PSD offsets for a project approved under OAC 753. The refinery changed out the burners in August 2011 to comply with Regulatory Order 26 issued August 22, 2000, and to improve heater stability over a wider range of hydrogen levels in the refinery fuel gas. The 2011 burner replacement project was completed without NSR permitting as refinery emissions estimates showed no increase.

Stack testing discovered that the new burners resulted in an increase in NOx emissions compared to the burner that had been replaced. This NOx increase triggered NSR and NSPS Subpart Ja requirements that had not been met. To resolve these compliance issues, the Agency issued Agreed Compliance Order 09 requiring the burners to be replaced by no later than September 30, 2014 with burners that did not result in a NOx increase.

The burners were replaced in accordance with Agreed Compliance Order 09 and OAC 1184. The ongoing requirements of Conditions 1 and 2 of OAC 1184 have been incorporated into the AOP.

Condition 3 requires the heater to be stack tested to demonstrate that there was no increase in NOx emissions. Stack testing was completed on July 7, 2015 demonstrating that there was no NOx increase. Condition 3 is completed so is not included in the AOP.

Condition 4 of the OAC requires submittal of a startup notice. On May 13, 2015, the Agency received notice that Crude Heater F-101 was restarted on May 3, 2015 following installation of the low-NOx burners approved under OAC 1184. Condition 4 is completed so is not included in the AOP.

Because 40 CFR 60 Subpart Ja was triggered for NOx during the 2011 burner replacement project, the heater remains subject to 60 Subpart Ja and is equipped with a CEMS to ensure compliance with the NSPS NOx standard.

See discussion below regarding inclusion of Agreed Compliance Order 09 and Regulatory Order 26 in the AOP.

NWCAA OAC 1190 (Feedstocks Unloading Facility) issued September 15, 2014

OAC 1190 approved a modification of an existing asphalt transfer rack approved under OAC 649b to a Feedstocks Unloading Facility allowing the rack to offload an intermediate feed, specifically a Catalytic Cracking Unit (CCU) feedstock. The modification included adding a method to heat material in the railcars to a temperature and viscosity that allows the waxy CCU feed to gravity drain from the railcars. Once offloaded, the CCU feed is pumped to Tanks 247 and 248. The project including converting Tanks 247 and 248 from fixed roof tanks to internal floating roof (IFR) tanks with mechanical shoe primary seals and a rim or shoe-mounted secondary seal.

Condition 7 of OAC 1190 requires that the Agency be notified of initial feedstock offloading following completion of the project. On June 24, 2016, the Agency received the notice

stating that initial offloading occurred on June 21, 2016. In separate correspondence, the refinery provided a 40 CFR 60 Subpart Kb notice that Tanks 247 and 248 would return to service in May 2016 following their conversion to IFR tanks.

Because Condition 7 is a one-time only requirement that has been completed, it is not included in the AOP. OAC 1190 includes a number of ongoing requirements that are included in the AOP.

NWCAA OAC 1205 (Improvement and Reliability Project) issued February 13, 2015

OAC 1205 approved a project to replace equipment in a number of process units to reduce fouling and corrosion, and improve the separation of light gas oil (LGO) and straight-run (SR) residue. The OAC requires a LDAR program be implemented in the Crude, Vacuum Flasher, CFH and DHT process units as BACT. The one-time only requirement of the OAC to notify the NWCAA upon startup of the Crude unit following the maintenance outage during which the project was constructed has been completed. The Agency received the startup notice on May 13, 2015 stating that the Crude unit started up on May 3, 2015.

NWCAA OAC 1222a (Clean Fuels Upgrade Project) originally issued July 18, 2017, and revised January 25, 2024

OAC 1222 (along with PSD 17-01) approved construction of the Clean Fuels Upgrade Project which included a new Isomerization process unit (Isom), modifications to the existing CR/NHT process unit, a new F-6870 natural-gas fired boiler, new Aromatics Recovery Unit (ARU), three new mixed xylene storage tanks (ARU tanks) and a marine vapor emissions control system (MVEC). The boiler, ARU, ARU tanks and MVEC were not constructed and OAC 1222a was issued to reflect the project without those units.

The NO_X and VOC emissions from the remaining CPUP project in OAC 1222a still exceed 50% of the PSD significance emissions rate triggering 40 CFR 52.21(r)(6) monitoring and annual reporting to the NWCAA for 5 years from project startup.

***NWCAA OAC 1239 (Alky Unit Chiller Project) issued July 21, 2016**

OAC 1239 approved installation of a cooling tower, water-cooled chiller, and heat exchanger at the Alky Unit with the goal of increasing the production rate of alkylate during the warmer months of the year (April through October). The project was never constructed. In accordance with 300.11 (Order of Approval - Time Limitations) OAC 1239 became invalid because the refinery did not begin construction within 18 months of approval. Because OAC 1239 is considered invalid, it is not listed in the AOP.

NWCAA OAC 1249 (Alky Compressor Project) issued November 10, 2016

OAC 1249 approved installation of a new steam-driven compressor (J-920) at the Alkylation Unit that replaced two existing steam-driven compressors (J-901 & J-902) in that unit. The LDAR requirement from Condition 1 of the order has been incorporated into the AOP. The one-time only compressor startup/shutdown notices in Conditions 2 and 3 of the order have been completed and are not included in the AOP. Specifically, the Agency received notice on May 18, 2018 stating the new J-920 compressor started up and the old J-901 and J-902 compressors were shutdown on May 15, 2018, thereby completing the notices requirements.

****NWCAA OAC 1261 (Secondary Seal on Tank 113) issued January 31, 2017**

OAC 1261 approved installation of a secondary seal on external floating roof (EFR) Tank 113. The secondary seal allows the tank to store NHT feed that is a high vapor pressure liquid. The project triggered 40 CFR 60 Subpart Kb as a modification and the tank has been

re-categorized as a Group 1 tank under 40 CFR 63 Subpart CC. OAC 1261 contains one condition requiring that the refinery provide a one-time only notice of project completion. On April 3, 2017, the Agency received a letter notifying the Agency that the secondary seal had been installed and that the refinery planned to put the tank back into service on April 29, 2017. Because OAC 1261 only includes a completed notification requirement, it is only listed in AOP Section 1.

NWCAA OAC 1309 (CCU Catalyst Adder System) issued February 7, 2019

OAC 1309 approved installation of a new multi-loader catalyst adder system at the CCU (V-397). The system can simultaneously add fresh catalyst, equilibrium catalyst, and catalyst additives to the CCU pressurized catalyst circulation loop from their respective storage silos. Fugitive catalyst dust from the multi-loader system is controlled by a dual-cartridge filter system. The one-time only startup notice required under Condition 1 of the OAC was completed on January 24, 2020, when the Agency received notice that the catalyst multi-loader adder system initially started on January 21, 2020. Other conditions of the OAC contain ongoing requirements that have been incorporated into the AOP. Condition 3 (the opacity standard) has been gap-filled to comply with the refinery-wide opacity program in AOP Term 6.1.

NWCAA OAC 1317 (Diesel Additive Project) issued February 27, 2019

OAC 1317 approved installation of system for injecting lubricity and conductivity additives to diesel fuel at the Truck Rack. The project involved installing a new 7,500-gallon fixed roof storage tank to store the lubricity additive, a 400-gallon tote for the conductivity additive. The only emission unit approved under the order were the new equipment components installed during the project that include pumps, valves, and connectors used in the system that meters and injects the two additives into diesel. Condition 2 of the order requires the control of leaks from new equipment components in accordance with 40 CFR 60 Subpart GGGa and its referenced LDAR program under 40 CFR 60 Subpart VVa. This LDAR requirement is listed in the AOP. The one-time only requirement of Condition 1 was completed when the Agency received a startup notice on October 14, 2019 stating that the Diesel Additive System startup occurred October 7, 2019.

****NWCAA OAC 1353 (Paint Spray Booth) issued August 5, 2020**

OAC 1353 approved installation of paint spray booth at the refinery's maintenance area. The new paint booth replaces a paint spray booth that is being scheduled to be decommissioned. The project was reviewed for RACT under NWCAA 300.25 - Replacement or Substantial Alteration of Emission Control Technology. The Agency determined that RACT was the equivalent of NWCAA Section 508 — Spray Coating Operations that was adopted in 2018 and did not include any other specific ongoing control requirements. Pursuant to OAC 1353 Conditions 1 and 2, a notice was received June 25, 2021 stating that existing spray booth was shut down on June 22, 2021 and the new spray booth commenced operation on June 22, 2021. Because OAC 1353 only includes completed notification requirements, it is only listed in AOP Section 1.

NWCAA OAC 1395 (Selective Non-Catalytic Reduction (SNCR) on F-304) issued September 9, 2022

OAC 1395 approved a voluntary installation of a Selective Non-Catalytic Reduction (SNCR) system on the existing Anacortes Refinery CCU Carbon Monoxide Boiler (COB) F-304 (also referred to as COB2) to reduce nitrogen oxide (NOx) emissions. The SNCR system uses the ammonia in an existing refinery Sour Water Stripper (SWS) stream to convert nitrogen oxides to nitrogen and water. See Figure 3-1 for a process flow diagram of the SNCR.

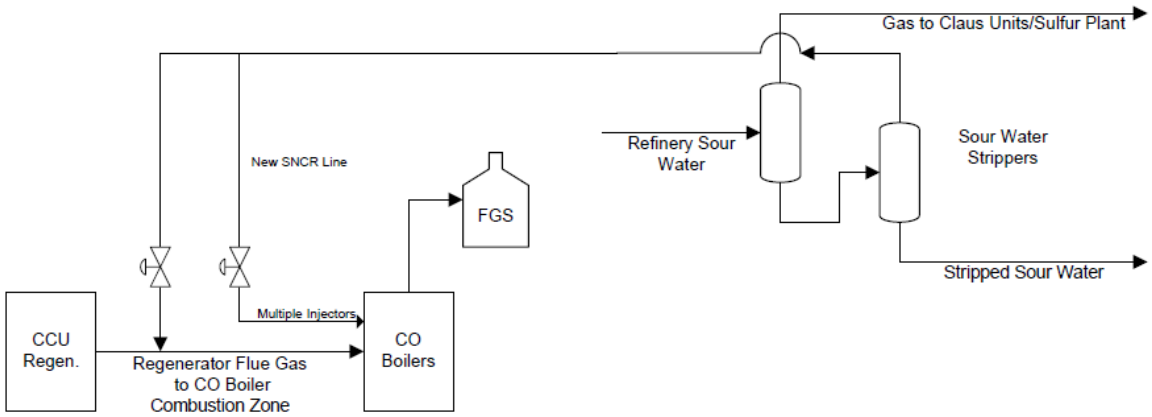

Figure 3-1: SNCR Process Flow Diagram

The SNCR project started up on June 8, 2023. The one-time only startup notice required under Condition 7 of the OAC was completed on June 12, 2023, when the Agency received the startup notice. Other conditions of the OAC contain ongoing requirements that have been incorporated into the AOP.

<u>*NWCAA Regulatory Order 26 (Heater F-101 low-NOX burner installation) issued August 22, 2000 and rescinded July 6, 2023</u>

Regulatory Order 26 was issued as part of a PSD offset project under OAC 390 (see above) regarding NOx Emission Reduction Credits (ERC) and the combustion of fuel oil in Heater F-101. Heater F-101 was required to be retrofitted with low-NO_X burner technology (see OAC 1184).

Because Heater F-101 no longer can burn fuel oil, Regulatory Order 26 is irrelevant and was rescinded on July 6, 2023. Regulatory Order 26 requirements are not included in the AOP.

<u>*NWCAA Agreed Compliance Order 09 (Heater F-101 low-NOX burner installation) issued January 22, 2014</u>

As discussed above, the refinery changed out Heater F-101 burners in August 2011 to comply with Regulatory Order 26 issued August 22, 2000, and to improve heater stability over a wider range of hydrogen levels in the refinery fuel gas. The 2011 burner replacement project was completed without NSR permitting as refinery emissions estimates showed no increase.

Stack testing discovered that the new burners resulted in an increase in NOx emissions compared to the burner that had been replaced. This NOx increase triggered NSR and NSPS Subpart Ja requirements that had not been met. To resolve these compliance issues, the Agency issued Agreed Compliance Order 09 requiring the burners to be replaced by no later than September 30, 2014 with burners that did not result in a NOx increase. All of the requirements in CO09 have been completed including the issuance of OAC 1184 so CO09 is not included in the AOP.

<u>*NWCAA Agreed Compliance Order 17 (Inadequate Electricity Supply at Sulfur Treatment Plant) issued February 7, 2018</u>

On June 19, 2015, inadequate electricity supply at the sulfur treatment plant, operated by Chemtrade, resulted in an exceedance of applicable standards. To resolve this issue, the

Anacortes Refinery signed Agreed Compliance Order 17 that required that on or before September 1, 2018, the primary selective slow transfer equipment be installed and confirmed to be operational. All of the requirements in CO17 have been completed so CO17 is not included in the AOP.

NWCAA Compliance Order 1006-23-08 (CO23) effective August 18, 2023

Tesoro entered into a Consent Decree with the U.S. Department of Justice entitled United States, et. al. v. Tesoro Refining & Marketing Company LLC, et al. (2016 Consent Decree). The Consent Decree was lodged with the court on July 18, 2016. The Date of Entry for the Consent Decree is September 28, 2016. The United States alleged that the company violated air quality requirements (statutory, regulatory, and SIP provisions) at numerous refineries that it owned including at the Anacortes Refinery. NWCAA is considered a State Co-Plaintiff on the 2016 Consent Decree.

Tesoro denied that it had violated the requirements and maintained that it had been and remains in compliance with all applicable requirements and therefore not liable for civil penalties and injunctive relief. To resolve the allegations, Tesoro settled by signing the 2016 Consent Decree agreeing to take a variety of actions to reduce air pollution emissions at the various Tesoro refineries including the Anacortes Refinery. The 2016 Consent Decree will eventually terminate (or "sunset") when Tesoro completes all of its obligations under the decree. Because obligations under the 2016 Consent Decree are not considered applicable requirements for the purposes of Title V, they are not directly included in the AOP.

One of the obligations in the 2016 Consent Decree is for Tesoro to obtain an order from NWCAA memorializing specific requirements at the Anacortes Refinery ensuring they continue on after the 2016 Consent Decree terminates. These requirements have been memorialized under NWCAA Compliance Order 1006-23-08 (CO23) signed on August 18, 2023. These requirements involve the Vacuum Flasher Heater (F-201), refinery-wide fugitive components in an enhanced leak detection and repair (ELDAR) program, and Flares X-813 and X-814.

All of the requirements of CO23 have been incorporated into the AOP.

3.1.2 Orders Issued by Washington State Department of Ecology

PSD 17-01 (Clean Fuels Upgrade Project) issued July 18, 2017

Prevention of Significant Deterioration Permit 17-01 (PSD 17-01) issued by the Washington State Department of Ecology (Ecology) approved the Clean Fuels Upgrade Project (CPUP). The project triggered PSD review for particulate matter and GHG. The project was concurrently permitted for the other pollutants by the NWCAA under OAC 1222.

After PSD 17-01 was issued, the CPUP was reduced in scope to construction of a new Isom process unit and modifications to the existing CR/NHT process units. The new F-6870 natural-gas fired boiler, new Aromatics Recovery Unit (ARU), three new mixed xylene storage tanks (ARU tanks) and a marine vapor emissions control system (MVEC) were not constructed within the 18-month timeframe specified under PSD 17-01 Condition II. As such, they are no longer authorized to be installed and the facility would need to apply for a new NSR permit to gain authorization to make these changes in the future. Only the requirements that apply to those changes that were constructed are included in the AOP.

Washington State Department of Ecology Administrative Order 7838 issued July 7, 2010

The Washington State Department of Ecology (Ecology) issued Order 7838 to Tesoro on July 7, 2010 in accordance with WAC 173-400-151 and 40 CFR Part 51 Subpart P, the state and federal visibility protection regulations. These regulations require the installation and use of

best available retrofit technology (BART) to reduce emissions of visibility-impacting pollutants.

Order 7838 (BART Order) includes requirements for 16 emission units at the refinery:

Process heaters and boilers

1. F-103: Crude Oil Distillation
2. F-104: Gasoline Splitter/Reboiler
3. F-304: CO Boiler #2
4. F-654: Catalytic Feed Hydrotreater
5. F-6600: Naphtha Hydrotreater
6. F-6601: Naphtha Hydrotreater
7. F-6602: Naphtha Hydrotreater
8. F-6650: Catalytic Reformer
9. F-6651: Catalytic Reformer
10. F-6652: Catalytic Reformer
11. F-6653: Catalytic Reformer
12. F-6654: Catalytic Reformer
13. F-6655: Catalytic Reformer

Other units

14. X-819: Flare (decommissioned)
15. CWT 2: Cooling Water Tower
16. CWT 2a: Cooling Water Tower

AOP Sections 1, 4, and 5 include the BART Order conditions as applicable requirements for the listed emission units with the following exceptions:

- Multi-jet flare X-819 was decommissioned during the flare gas recovery system upgrade approved under OAC 1182 and is not included in the AOP.
- The BART Order (BART Conditions 1.3, 1.5.2, 3.1.1, 3.1.2, 8.1 and 9.4.4) includes requirements when combusting oil in Heater F-103. Because this heater is not capable of burning oil, those requirements are not listed in the AOP.

Many of the conditions in the BART Order are existing requirements that have been repeated from the original regulation or NWCAA Order language. Where these requirements have been fully duplicated, the BART Order conditions are included in the same AOP Term line as the regulation or NWCAA Order.

Tesoro has chosen to demonstrate compliance with the Crude Heater F-103 59.1 tons/year NOx, 365-day rolling total NOx limit (BART Order Condition 2.1.1.1) through development of a unit-specific lb/MMBtu emission factor rather than use of a CEMS (BART Order Condition 2.1.2). The unit-specific emission factor is developed using EPA Reference Method 7E source testing. The initial testing was completed on January 5, 2016. It consisted of 4 discrete stack tests at least 3 weeks apart at a normal operating rate while recording specified operating information. Subsequent tests shall be conducted annually and the unit-specific emission factor is recalculated for use the following year (BART Order Conditions 9.4 & 9.5).

The reporting for the initial NOx test for F-103 was submitted in a timely manner; as such, BART Order Condition 10 is not listed in the AOP.

Tesoro has demonstrated compliance with the F-103 NOx limit for a continuous 36-month period. As such, semi-annual reporting to Ecology under BART Order Condition 12 is no longer necessary for F-103; reports are only to be submitted to NWCAA.

All the required controls under the BART Order were installed and operating in compliance with the Schedule for Compliance under BART Order Conditions 4, 5, & 6. As such, these

conditions are completed and not listed in the AOP. Documentation of the milestone completions were submitted in accordance with BART Order Condition 11; as such, that condition is completed and not listed in the AOP.

BART Order Condition 14 contains allowances for if the NOx control technology (i.e., ultra low-NOx burners (ULNB)) on F-103 will not be able to meet the emission limitations. Tesoro must request coverage under this allowance within 12-months of commencement of operation. The ULNB have been demonstrated to be able to meet the emission limitation. Therefore, this allowance is not necessary and the window for coverage has closed so BART Order Condition 14 is not listed in the AOP.

Condition 15 of the BART Order provides that the order may be rescinded upon incorporation of all terms in enforceable orders and the facility AOP and demonstration of compliance for three years. This allowance has been included in AOP Section 4.

The BART Order has been approved by EPA and rolled into 40 CFR 52 Subpart WW as of June 11, 2014 (40 CFR 52.2470(d)). As such, the cited requirements are federally enforceable. Note that the allowance for the order to be rescinded (i.e., BART Order Condition 15) is not listed in 40 CFR 52 Subpart WW 40 CFR 52.2470(d) so is not federally enforceable (i.e., State only).

40 CFR 52.2501 includes the "Better than BART Alternative" requirements applicable to the following non-BART eligible process heaters and boilers at the Anacortes refinery:

1. F-101: Crude Oil Distillation
2. F-102: Gasoline Splitter/Reboiler
3. F-201: CO Boiler #2
4. F-301: Catalytic Feed Hydrotreater
5. F-652: Naphtha Hydrotreater
6. F-751: Naphtha Hydrotreater
7. F-752: Naphtha Hydrotreater

These requirements are included in the AOP as applicable requirements.

3.2 State and Local Requirements

The AOP includes State and Local Regulations in addition to the orders described previously. This section is intended to provide clarification on selected terms related to these regulatory references.

3.2.1 Washington Administrative Code (WAC)

The Washington Administrative Code (WAC) primarily contains requirements that apply generally to all air pollution sources. These generally applicable requirements, such as limits on visible emissions (opacity), SO_2, and fugitive particulate matter are addressed in AOP Section 4.

WAC 173-491-040(2) applies to the Anacortes Refinery Truck Rack because the terminal loads more than 7,200,000 gallons of gasoline annually and is located in an ozone attainment area. See NWCAA 580.4 below for further discussion of requirements applicable to the Truck Rack.

Chapter 173-441 WAC (Reporting of Emissions of Greenhouse Gases): GHG are chemicals that contribute to climate change by trapping heat in the atmosphere. The greenhouse gases recognized by EPA and Ecology are: carbon dioxide (CO2), methane (CH4), nitrous oxide (N2O), hydrofluorocarbons (HFC), perfluorocarbons (PFC), and sulfur hexafluoride (SF6). "Hydrofluorocarbons" or "HFCs" are a class of greenhouse gases primarily used as refrigerants, consisting of hydrogen, fluorine, and carbon.

The Anacortes Refinery is required to meet Chapter 173-441 WAC, "Reporting of Emissions of Greenhouse Gases", which adopts a mandatory greenhouse gas reporting rule for:

- Suppliers that supply applicable fuels sold in Washington state of which the complete combustion or oxidation would result in at least 10,000 metric tons of carbon dioxide annually; or
- Any listed facility that emits at least 10,000 metric tons of carbon dioxide equivalents (CO2e) of greenhouse gases annually in the state.

Chapter 173-441 WAC was adopted by Ecology on December 1, 2010, subsequently amended, and became effective on March 12, 2022. This regulation applies to the refinery because it emits at least 10,000 metric tons of CO2e of greenhouse gases per year (see SOB Table 1-5). The rule requires annual GHG inventories be provided to Ecology by no later than March 31 of the following year beginning for calendar year 2012. This regulation is implemented in its entirety by Ecology. Because the statutory authority for Chapter 173-441 WAC is the state Clean Air Act (Chapter 70A.15 RCW), it is considered an applicable requirement under the air operating permit program (WAC 173-401-200(4)); as such, it is included in the AOP.

Chapter 173-485 WAC (Petroleum Refinery Greenhouse Gas (GHG) Emission Requirements): The Anacortes Refinery complied with the requirements under chapter 173-485 WAC in a timely fashion. In accordance with WAC 173-485-050 and 173-485-090(1), Tesoro has no further reporting or compliance obligations under chapter 173-485 WAC and it is therefore not listed in the AOP.

3.2.2 NWCAA Regulation

The NWCAA Regulation contains requirements that are generally applicable to all air pollution sources. These generic limits are mostly addressed in AOP Section 4 but, for requirements that apply to specific emission unit types, they are listed in AOP Section 5.

NWCAA Section 300: NWCAA Section 300 contains NWCAA's minor new source review (NSR) program mandating that new or modified emissions sources be reviewed for compliance with Best Available Control Technology (BACT) requirements and the National Ambient Air Quality Standards (NAAQS). These requirements are applicable when triggered and are included in AOP Section 2.

Ecology, not NWCAA, has the authority to issue major new source review permits (i.e., Prevention of Significant Deterioration (PSD)); however, once the PSD permit is rolled into the AOP, NWCAA has the authority to enforce upon them.

NWCAA 455.1 – NWCAA Section 455 lists the maximum allowed limits on particulate matter for general sources, general combustion sources, gaseous and distillate fuel burning equipment, wood-fired steam generations units, existing petroleum catalytic cracking units, and wood waste burners. These requirements are addressed generally for all subject emission units in AOP Section 4.

However, existing petroleum catalytic cracking units, such as the catalytic cracking unit at the Anacortes Refinery, are limited to 0.20 grain/dscf of exhaust gas corrected to 7% oxygen (NWCAA 455.13), which is listed in AOP Section 5. Upon Tesoro request, NWCAA issued a determination dated August 4, 2023 under NWCAA 455.15 that the Anacortes Refinery CCU is subject to the NWCAA 455.1 limit of 0.10 grain/dscf uncorrected during CCU hot standby operation to the Diversion Stack due to the unique conditions during that operating scenario. The CCU is subject to the NWCAA 455.13 standard at all other times. AOP Term 5.3.5 reflects this determination.

NWCAA Section 508: NWCAA Section 508 applies to spray coating operations at sources within NWCAA's jurisdiction. It establishes a program of work practice standards and controls for spray coating operations to reduce particulate matter emissions from coating overspray, lessen public exposure to toxic air pollutants, decrease emissions of precursors to the formation of tropospheric ozone and encourage pollution prevention. NWCAA' spray coating regulation does not apply to spray application of architectural or maintenance coatings on stationary structures.

The Anacortes Refinery operates a paint spray booth that is subject to NWCAA Section 508. The applicable requirements are included in the AOP.

NWCAA 560.11, 580.3, & 580.9: NWCAA Regulation Sections 560 and 580 include provisions applicable to storage tanks containing materials with true vapor pressure (TVP) greater than 1.5 psi but less than 11.1 psi.

Tanks 39 and 40 receive slop oil in the wastewater treatment area of the facility, which can include either untreated slop oil (for example, skim oil from the API) or treated oil. Untreated slop oil TVPs range from 0 to 10.5 psia and trigger NWCAA Section 560 and 580.3 monitoring, recordkeeping, and reporting.

NWCAA 580.26: NWCAA 580.26 states that:

> Any petroleum refinery process unit, storage facility or other operation (including drains) subject to federal VOC or HAP standards (NSPS, Benzene Waste NESHAP, Petroleum Refinery NESHAP, etc.) is exempt from the requirements of NWCAA 580.3 through NWCAA 580.10. Such exemption shall take effect upon the date of required compliance with the federal standard.

However, this language is not in the current State Implementation Plan (SIP) and, therefore, is not federally enforceable. Because of this discrepancy, only the SIP-adopted version of these NWCAA citations are found in the AOP. This particularly impacts storage tanks and the Truck Rack.

NWCAA 580.4: NWCAA 580.4 applies to the Anacortes Refinery Truck Rack because the terminal loads more than 7,200,000 gallons of gasoline annually.

NWCAA 580.424 requires biannual performance testing (or another method approved by the Control Officer). However, during OAC 1171, the Agency determined that the use of a CEMS and 60-month testing was an adequate alternative to testing biannually. This is specifically stated on page 8 of the technical worksheet for OAC 1171 as follows:

> *<u>This permitting action is hereby approves, by the Control Officer</u>, the use a CEMS to demonstrate continuous compliance, along with conducting an initial performance test within 180 days of startup, and periodic performance testing conducted at least once every 60 months thereafter to demonstrate compliance with the 10 mg/lt limit of Condition 4 of OAC 1171. These requirements represent an approved alternative method by the NWCAA Control Officer.*

This is reflected in AOP Terms 5.10.18 and 5.10.19 and is carried into the MR&R for NWCAA 580.424.

NWCAA 580.10: NWCAA 580.10 applies to the Anacortes Refinery Truck Rack because it is subject to NWCAA 580.4 and it interacts with gasoline transport tanks. Note that NWCAA 580.104, which is in the SIP, was subsequently renumbered to NWCAA 580.103 in the current version of the Regulation.

3.3 Federal Requirements

The Anacortes Refinery has affected facilities subject to the following federal regulations.

3.3.1 New Source Performance Standards (NSPS)

New Source Performance Standards (NSPS) establish criteria pollutant performance standards for equipment based on their date of construction or modification. Many NSPS subparts potentially apply to the Anacortes Refinery. The applicability of each subpart is discussed below.

40 CFR 60 Subpart A – General Provisions

If an NSPS subpart applies to a facility, the general provisions of 40 CFR 60 Subpart A also apply, unless otherwise specified in the subpart. These general provisions are included in AOP Section 3, including those that are applicable when triggered by a particular action. If the 60 Subpart A term is not a specific requirement for the facility, it is not included in the AOP. If the requirement was a one-time requirement that has been completed, it is not included in the permit. If the requirement was something in the past, or addressed something that the regulatory agency must do, it was not included.

40 CFR 60 Subparts D, Da, Db, & Dc – Standards of Performance for Fossil-Fuel Fired Steam Generating Units

40 CFR 60 Subparts D, Da, Db, and Dc apply to fossil-fuel-fired steam generating units of a specified size and construction date. The only affected unit at the facility is Boiler F-753, which is subject to 60 Subpart Db.

As a boiler that was constructed, modified, or reconstructed after June 19, 1984 with a heat input capacity greater than 100 MMBtu/hr and that meets the applicability requirements as a fuel gas combustion device under 60 Subpart J, the 220 MMBtu/hr natural gas/propane, Boiler F-753 is subject to the particulate matter and nitrogen oxide emission standards under 60 Subpart Db and the sulfur dioxide standards under 60 Subpart J. Per the definitions in 60.41b, propane (liquified petroleum gas) is considered natural gas.

Regarding nitrogen oxides under 60 Subpart Db, a CEMS is required to continuously monitor nitrogen oxides emissions unless an alternative method is approved by EPA. An alternative predictive emissions monitoring system (PEMS) was proposed by the refinery and approved by EPA on October 20, 1996. Eventually, the NOx PEMS was replaced by a CEMS as part of an enforcement action. During OAC 390 revision e, the approval for the boiler to burn fuel oil was removed and NOx monitoring using a CEMS was required. The 60 Subpart Db requirements for Boiler F-753 are included in AOP Section 5.

For 60 Subpart Db particulate matter requirements, because this boiler does not burn wood, coal, or oil, it is exempt from the 60 Subpart Db particulate matter standards in 60.43b.

Because Boiler F-753 is subject to 60 Subpart J, it is not subject to the 60 Subpart Db requirements for SO2. See 60 Subpart J discussion for SO2 requirements.

No other process heaters or boilers (including the CO Boilers) are subject to 60 Subpart D, Da, or Db.

40 CFR 60 Subparts J & Ja – Standards of Performance for Petroleum Refineries

40 CFR 60 Subpart J establishes new source performance standards for fluid catalytic cracking unit (CCU) regenerators, fuel gas combustion devices, and all Claus sulfur recovery plants of a certain size that are constructed or modified after June 11, 1973. 40 CFR 60 Subpart Ja establishes new source performance standards for fluid catalytic cracking units (CCU), fluid coking units, delayed coking units, fuel gas combustion devices (including

process heaters), flares, and sulfur recovery plants for which construction, reconstruction, or modification commenced after May 14, 2007.

Fuel Gas Combustion Devices: Boiler F-753 (220 MMBtu/hr natural gas/propane boiler) is subject to the SO2 requirements under 60 Subpart J as a fuel gas combustion device when burning propane fuel (propane fuel is considered to be refinery fuel gas).

40 CFR 60 Subpart J for Petroleum Refineries requires that the sulfur oxide concentration of flue gas not exceed 20 ppmv on a 3-hour average, and that the H_2S content of refinery fuel gas shall not exceed 0.10 gr/dscf on a 3-hour average. The H_2S content standard is equivalent to 116 ppmw sulfur in propane. Tesoro has developed and proposed an Alternative Monitoring Plan (AMP), that describes procedures to be followed whenever propane is utilized as a fuel in Boiler F-753 (including in combination with commercial natural gas). This plan has been developed as an alternative to the installation of a continuous analyzer to measure the sulfur content of the fuel stream or sulfur oxide content of boiler flue gas for compliance with 60 Subpart J.

These requirements are included in AOP Sections 5 and 7, where AOP Section 7.1 contains the AMP for monitoring sulfur when propane is combusted approved by EPA Region 10 on May 14, 1996. Because this AMP is complex and it would be difficult to incorporate the requirements into the relevant AOP Terms, AOP Term 5.8.3 directly references the AMP so, for clarity and ease of implementation, the AMP is included as part of the AOP. Note that the last time the Anacortes Refinery burned propane in Boiler F-753 and used this AMP was in 2009.

The 2016 Consent Decree mandated that Heater F-201 is a fuel gas combustion device affected source under 60 Subpart J for SO2. This requirement is memorialized in Compliance Order 1006-23-08 (CO23). Note that F-201 draws its fuel gas from the main refinery fuel gas system; therefore, while other process heaters and boilers may not be directly subject to the 60 Subpart J requirements, the fuel gas they burn will meet the 60 Subpart J requirements.

Crude Heater F-101 triggered 60 Subpart Ja requirements for NOx under OAC 1184. F-101 is equipped with a CEMS to ensure compliance with the 60 Subpart Ja NOx standard.

Flares: On December 22, 2008, the Federal Register published a notice of a stay to provisions of 40 CFR 60 Subpart Ja relating to the definition of flares, modifications to flares, and the NOX limit for combustion devices. On September 12, 2012, EPA published a Federal Register notice that lifted the stay and amended certain provisions of 60 Subpart Ja that were included in the stay. With the lifting of the stay and the modification definition for flares under 60.100a(c), Anacortes Refinery triggered NSPS Subpart Ja with the connection of process equipment to the existing flare system and, hence, the flare system is subject to 60 Subpart Ja requirements for SO2. In addition, the 2016 Consent Decree explicitly makes the flare system subject to 60 Subpart Ja, which is memorialized in CO23.

Generally, 60 Subpart Ja for flares requires a written Flare Management Plan, compliance with a limit on H2S combusted in the flares including a H2S CMS, conducting a root cause analysis for certain flaring events, and operation of a total reduced sulfur CMS and flow monitor. These requirements are included in AOP Section 5.7.

Sulfur Recovery Units (SRU): Tesoro contracts out the operation of the SRU for the Anacortes Refinery to the adjacent sulfur treatment complex, currently operated by Chemtrade. The SRU is subject to 60 Subpart J and compliance with these requirements is managed by Chemtrade under their separate AOP.

Other boilers, process heaters and the Catalytic Cracking Unit at the Anacortes Refinery are not subject to 60 Subpart J or the more recent 60 Subpart Ja because they are not new or

have not been modified or reconstructed in accordance with the relevant definitions related to 60 Subpart J and 60 Subpart Ja. The Anacortes Refinery does not maintain a delayed coker unit or fluid coking unit.

40 CFR 60 Subparts K, Ka and Kb - Standards of Performance for Volatile Organic Liquid Storage Vessels

The following New Source Performance Standards apply to storage tanks (i.e., vessels) at the refinery depending on the size, the material stored, and the date the tank was constructed, reconstructed or modified:

- 40 CFR 60 Subpart K - Standards of Performance for Storage Vessels for Petroleum Liquids for Which Construction, Reconstruction, or Modification Commenced After June 11, 1973, and Prior to May 19, 1978
- 40 CFR 60 Subpart Ka - Standards of Performance for Storage Vessels for Petroleum Liquids for Which Construction, Reconstruction, or Modification Commenced After May 18, 1978, and Prior to July 23, 1984
- 40 CFR 60 Subpart Kb - Standards of Performance for Volatile Organic Liquid Storage Vessels (Including Petroleum Liquid Storage Vessels) for Which Construction, Reconstruction, or Modification Commenced after July 23, 1984

Further discussion of storage tanks at the refinery and their applicable requirements can be found in SOB Section 3.6.

40 CFR 60 Subparts VV & VVa – Standards of Performance for Equipment Leaks of VOC in the Synthetic Organic Chemicals Manufacturing Industry

40 CFR 60 Subparts VV & VVa establish new source performance standards for equipment leaks in synthetic organic chemicals manufacturing industry. The Anacortes Refinery is not a synthetic organic chemicals manufacturer; as such, 40 CFR 60 Subparts VV and VVa do not directly apply but other LDAR programs (e.g., 40 CFR 60 Subparts GGG & GGGa and 40 CFR 63 Subpart CC) require subject equipment to comply with 60 Subpart VV or VVa, with specific exemptions. Further discussion of LDAR requirements at the refinery and their applicable requirements can be found in SOB Section 3.4.

40 CFR 60 Subpart XX– Standards of Performance for Bulk Gasoline Terminals

40 CFR 60 Subpart XX applies to Bulk Gasoline Terminals constructed or modified after December 17, 1980. A Bulk Gasoline Terminal is defined as "any gasoline facility which receives gasoline by pipeline, ship or barge, and has a gasoline throughput greater than 75,700 liters (20,000 gallons) per day." The Truck Rack at the Anacortes Refinery has the capacity to load up to 6,000 gallons per minute and a sustained capacity to load 1.68 million gallons per day. The Truck Rack receives gasoline from the refinery's storage tanks through piping. This piping is considered a "pipeline" for the purposes of 60 Subpart XX applicability. This interpretation is supported by EPA Applicability Determination Index (ADI) Control Number: 9600049 that states; "the word *pipeline* as used in the EIS and Subpart XX means both long-distance piping and on-site piping". As such, the Anacortes Refinery Truck Rack is subject to 60 Subpart XX.

40 CFR 63 Subpart CC provides an overlap provision for 60 Subpart XX under 63.640(r). This overlap provision requires that Group 1 gasoline loading racks, such as the Anacortes Refinery Truck Rack, subject to both 60 Subpart XX and 63 Subpart CC must comply with 63 Subpart CC requirements. See 63 Subpart CC for gasoline loading racks below for further discussion.

40 CFR 60 Subparts GGG & GGGa – Standards of Performance for Equipment Leaks of VOC in Petroleum Refineries

40 CFR 60 Subparts GGG & GGGa establish new source performance standards for equipment leaks in petroleum refineries by requiring compliance with the leak detection and repair (LDAR) standard of 40 CFR 60 Subpart VV and 40 CFR 60 Subpart VVa, respectively. Further discussion of LDAR requirements at the refinery and their applicable requirements can be found in SOB Section 3.4.

40 CFR 60 Subpart NNN – Standards of Performance for Volatile Organic Compound (VOC) Emissions From Synthetic Organic Chemical Manufacturing Industry (SOCMI) Distillation Operations

40 CFR 60 Subpart NNN establish new source performance standards for Synthetic Organic Chemical Manufacturing Industry (SOCMI) distillation operations that produce a listed chemical (including butane, isobutane, and propane) as a product, co-product, by-product, or intermediate. The Anacortes Refinery operates 3 columns that are subject to 60 Subpart NNN: C-916 Stabilizer Column at BI Unit (yields butane), C-910 De-Isobutanizer Column at BI Unit (yields butane and isobutane), and C-404 De-Propanizer Column at Gas Recovery Plant (yields propane). Vent streams from these columns are routed to the refinery fuel gas system and are subject to 60 Subpart NNN emission limitation and control requirements. There are no streams that vent directly to atmosphere.

The subject streams are introduced into heaters and boilers with the primary fuel. Therefore, temperature monitoring is not required for any of the heaters or boilers.

There are no bypasses that divert the subject vent stream from being routed to the flare or boiler/process heater resulting in its emission to the atmosphere. Therefore, flow monitoring or car-seals are not required.

The Anacortes Refinery received an Alternative Monitoring Plan (AMP) issued November 12, 2020 allowing them to utilize the monitoring, recordkeeping, and reporting stipulated under 60 Subpart RRR rather than that under 60 Subpart NNN. The applicable 60 Subpart NNN requirements as modified by the AMP are reflected in AOP Terms 5.3.22, 5.3.23, 5.5.1, and 5.5.2. For completeness and similar to the other refinery AMPs, this AMP is attached to the AOP as AOP Section 7.3.

40 CFR 60 Subpart QQQ– Standards of Performance for VOC Emissions from Petroleum Refinery Wastewater Systems

40 CFR 60 Subpart QQQ establishes new source performance standards for VOC emissions from individual drain systems, oil-water separators, or aggregate facilities located in petroleum refineries for which construction, modification, or reconstruction is commenced after May 4, 1987. The construction or installation of a new individual drain system constitutes an affected facility. For purposes of this regulation, a new individual drain system shall be limited to all process drains and the first common junction box. The Anacortes Refinery has constructed, modified, or reconstructed the drain systems in the following process units and those individual drain systems are subject to 60 Subpart QQQ:

- ROSE Unit (2001)
- Clean Fuels Hydrotreater (CFH)/Distillate Hydrotreater (DHT) (2006)
- Selective Hydrogenation (SHU) (2007)
- Jet Fuel Treater (JFT) (1999)

- Amine 2 (2007)
- BenSat Unit (2011)
- Isomerization Unit (2018)
- Butane Isomerization (1995)
- Truck Rack (2015)
- Wharf (1993)
- Feedstocks Unloading Facility (1998)
- Crude Railcar Offloading Facility (CROF) (2012)
- Storage Tanks 202, 203 and 231 (1993/1994)
- Storage Tanks 247 & 248 (2010)

The Effluent Plant itself was constructed with the original refinery in 1955 and has not been modified or reconstructed for the purposes of 60 Subpart QQQ so is not subject to 60 Subpart QQQ.

AOP Sections 1 and 5 include references to the applicability of 60 Subpart QQQ to various refinery process drains. The 60 Subpart QQQ requirements are listed in AOP Section 6.5. See SOB Section 3.5 for a further discussion of regulatory applicability to the oily wastewater collection and treatment system.

40 CFR 60 Subparts IIII & JJJJ - Standards of Performance for Stationary Internal Combustion Engines

40 CFR 60 Subpart IIII establishes new source performance standards for diesel-fired compression ignition (CI) engines in stationary service constructed after July 11, 2005. The regulation has requirements for both manufacturers and owners/operators of these engines. There are four diesel engines at the Anacortes Refinery subject to 60 Subpart IIII and listed in SOB Table 3-1. All have displacements of less than 30 liters per cylinder.

Table 3-1: Diesel Engines Subject to 40 CFR 60 Subpart IIII at the Anacortes Refinery

Engine ID	Constr.	HP	Type	Use Description	Category
GEN-765	2009	250	4 Stroke	Administration Building Emergency Generator	New Emergency CI
ENG-811	2008	250	4 Stroke	Emergency Fire Water Pump	Existing Emergency CI
ENG-812	2008	250	4 Stroke	Emergency Fire Water Pump	Existing Emergency CI
J-750	Modified 2015	563	4 stroke	Emergency Portable Air Compressor	New Emergency CI

Note that the refinery does not operate any engines subject to 40 CFR 60 Subpart JJJJ – Standards of Performance for Stationary Spark Ignition Internal Combustion Engines. All spark ignition engines at the refinery are manufactured before the regulation trigger dates.

The specifically applicable requirements for subject engines are included in AOP Section 5. The regulation also includes prohibitions on the installation of uncertified engines that is included in AOP Section 3.

3.3.2 National Emission Standards for Hazardous Air Pollutants (NESHAPs)

National Emission Standards for Hazardous Air Pollutants (NESHAPs) under 40 CFR Part 61 establish performance standards for listed stationary sources that emit the listed hazardous air pollutants. NESHAPs under 40 CFR Part 63 establish performance standards for specific categories of stationary sources that emit (or have the potential to emit) one or more listed hazardous air pollutants. Many NESHAPs under both Part 61 and Part 63 potentially apply to the Anacortes Refinery. The applicability of each subpart is discussed below.

40 CFR 61 Subpart A – General Provisions

If a NESHAP standard under 40 CFR Part 61 applies to a facility, the general provisions of 40 CFR 61 Subpart A also applies. These general provisions are included in AOP Section 3.2. 61 Subpart A requirements tend to be applicable only when triggered by a particular action, such as an initial startup notice and an initial notification when a facility becomes subject to a standard under 40 CFR Part 61.

40 CFR 61 Subpart J – National Emission Standard for Equipment Leaks (Fugitive Emissions Sources) of Benzene

40 CFR 61 Subpart J applies to equipment "in benzene service," which means a piece of equipment that contains or contacts a fluid (liquid or gas) that is at least 10 percent benzene by weight as determined according to the provisions of 61.245(d). Subject equipment includes pumps, compressors, pressure relief devices, sampling connection systems, open-ended valves or lines, valves, connectors, *surge control vessels*, *bottoms receivers*, and control devices or systems. The BenSat and Isomerization unit do include equipment that qualifies as in benzene service. The Anacortes Refinery produces around 32 Mg of benzene annually.

Equipment in benzene service that is located at a plant site designed to produce or use less than 1,000 megagrams (1,102 tons) of benzene per year is exempt from the 61 Subpart J standards under 61.112 but must keep records as required in 61.246(i) under 40 CFR 61 Subpart V. See the LDAR section in SOB Section 3.4 for further discussion.

40 CFR 61 Subpart FF – National Emission Standard for Benzene Waste Operations

The refinery's oily wastewater collection and treatment system is subject to 40 CFR 61 Subpart FF based on the potential to emit of benzene from wastewater streams. Following rule promulgation, the refinery installed covers and carbon canisters to control benzene emissions from vents at the Effluent Plant wastewater treatment plant. The project was permitted under OAC 362 issued in 1992.

The Anacortes Refinery has a total annual benzene loading of greater than 10 megagrams per year and has chosen the 2 Mg compliance option allowed under 61 Subpart FF. This option allows the facility to manage a limited amount of waste uncontrolled. Exempted wastes under this option include the following streams: (1) contain less than 10 ppmw benzene and (2) contain greater than 10 ppmw benzene but have a total annual benzene content not to exceed 2.0 Mg.

61 Subpart FF states that breakthrough at the carbon canisters is a reading of 500 ppm VOC. The Anacortes Refinery requested and was granted a determination of equivalent stringency by EPA defining 5 ppm benzene as breakthrough on the Effluent Plant carbon canisters on November 20, 2012 to demonstrate compliance with 61.354(d).

61 Subpart FF applicability and requirements have been incorporated as appropriate into the facility-wide Oily Wastewater Collection and Treatment in AOP Section 5. The requirements include methods for determining total annual benzene (TAB) quantity at the refinery and other point-of-generation considerations, how to control emissions from drain systems, junction boxes, and sewer systems as well as treatment and storage in the Effluent Plant. See SOB Section 3.5 for a further discussion of regulatory applicability to the oily wastewater collection and treatment system.

40 CFR 63 Subpart A – General Provisions

If a NESHAP standard under 40 CFR Part 63 applies to a facility, the general provisions of 40 CFR 63 Subpart A also apply, unless otherwise specified in the subpart. These general provisions are included in AOP Section 3.3, including those applicable when triggered by a particular action. Conversely, if a part of 63 Subpart A does not have specific requirements for the facility, it is not included in the AOP. If the requirement was something in the past that was a one-time requirement that has been completed, it is also not in the AOP. If the requirement was something in the past, or addressed something that a regulatory agency must do, it was not included.

40 CFR 63 Subparts F, G, & H – National Emission Standards for Organic Hazardous Air Pollutants From the Synthetic Organic Chemical Manufacturing Industry

When the Anacortes Refinery produces butane, isobutane, and propane, the associated distillation columns are subject to the Synthetic Organic Chemical Manufacturing Industry (SOCMI) distillation operations requirements under 40 CFR 60 Subpart NNN. However, butane, isobutane, and propane are not included on the list of products in 40 CFR 63 Subpart F Table 1. As such, 40 CFR 63 Subparts F, G, and H do not apply to the Anacortes Refinery.

40 CFR 63 Subpart Y – National Emission Standards for Marine Tank Vessel Loading Operations

40 CFR 63 Subpart Y applies to marine tank vessel loading operations that are major sources of HAP. However, existing offshore loading terminals (i.e., a location that has at least one loading berth that is 0.5 miles or more from the shore that is used for mooring a marine tank vessel and loading liquids from shore) are subject to 63 Subpart Y but are exempt from the 63 Subpart Y requirements except that they must meet the submerged fill requirements under 46 CFR 153.282. Anacortes Refinery's marine terminal is 0.5 miles from shore or more; therefore, it is subject only to the submerged fill requirements which is included in the AOP.

40 CFR 63 Subpart CC – National Emission Standards for Hazardous Air Pollutants from Petroleum Refineries

40 CFR 63 Subpart CC establishes National Emission Standards for Hazardous Air Pollutants (NESHAP) for evaporative sources at petroleum refineries. 63 Subpart CC applies to petroleum refining process units that emit or have equipment containing or contacting one or more of the hazardous air pollutants listed in the NESHAP. 63.640(c) specifies that for the purpose of this subpart, the affected source comprises all emission points, in combination, in affected petroleum refining process units of miscellaneous process vents, storage vessels, wastewater, equipment leaks, gasoline loading racks, marine vessel loading operations, and heat exchangers, among others.

Tesoro submitted the initial Notification of Compliance Status (NOCS) for 63 Subpart CC on January 14, 1999. The notification included applicability determinations for process equipment includes storage vessels (tanks), miscellaneous process vents, wastewater

streams and treatment operations, and equipment leaks. The NOCS was updated on January 8, 2013, to include heat exchange systems. The NOCS was also updated on September 26, 2016 to include newly affected Group 1 storage vessels. Another update was submitted July 10, 2019 to include pressure relief devices subject to 63.648(j). On January 30, 2024, Tesoro submitted an update to the NOCS related to subject storage vessels.

Miscellaneous Process Vents: Miscellaneous process vents (MPVs) are defined as a gas streams containing greater than 20 parts per million by volume organic HAP that is continuously or periodically discharged from a petroleum refining process unit. Miscellaneous process vents include gas streams that are discharged directly to the atmosphere, gas streams that are routed to a control device prior to discharge to the atmosphere, or gas streams that are diverted through a product recovery device prior to control or discharge to the atmosphere. However, the definition excludes, among other things, gaseous streams routed to a fuel gas system provided that any flares receiving gas from the fuel gas system comply with 63.670, such as those at the Anacortes Refinery.

A Group 1 MPV is a miscellaneous process vent where the total organic HAP concentration is greater than or equal to 20 parts per million by volume, and the total volatile organic compound emissions are greater than or equal to 33 kilograms per day for existing sources and 6.8 kilograms per day for new sources at the outlet of the final recovery device (if any) and prior to any control device and prior to discharge to the atmosphere.

A Group 2 MPV is a miscellaneous process vent that does not meet the definition of a Group 1 Miscellaneous Process Vent.

Potential Miscellaneous Process Vents (MPVs) at the Anacortes Refinery and applicability of 63 Subpart CC are listed with the associated control strategy in SOB Table 3-2.

Table 3-2: Potential Miscellaneous Process Vents

Process Unit	Vent Number	CC MPV?	Group	Note
Crude	1-1273-003	No	--	Routed to fuel gas
	1-1272-004 1-1290-006	No No	-- --	Routed to fuel gas Routed to fuel gas
Vacuum Flasher	2-632-005 2-645-013* 2-647-007 2-683-002	No Yes No No	-- 1 -- --	Routed to fuel gas Boilers F-751/752 (>44 MW) Routed to fuel gas Routed to fuel gas
CCU	3-655-009 3-655-011	Yes Yes	1 1	COBs F-302/304 (>44 MW) or Boilers F-751/752 (>44 MW)
	65-667-004	No	--	Routed to fuel gas
BI	95-648-022	No	--	Routed to fuel gas
In-situ sampling systems	Various	Yes	2	Emit < 72 lbs VOC/day

*when the gas plant is down

The Anacortes Refinery does not maintain any 63 Subpart CC process vent bypass lines.

Maintenance vents were designated as a special category of MPVs as part of the Refinery Sector Risk and Technology Review (RTR) initiative with newly required operational standards. Tesoro has implemented procedures to identify all maintenance vents as they are used to provide relief within the unit as a result of startup, shutdown, maintenance, or for inspection of equipment when emptied, depressurized, degassed or placed into service. Operational standards are in place to measure, record and ensure each maintenance vent

LEL is below 10% prior to release to atmosphere. Because these vents can be found in every process unit at the refinery, requirements for maintenance vents are listed in the AOP in Section 4, under Generally Applicable Requirements.

Storage Vessels: 63 Subpart CC requires the classification of storage vessels based on the tank size and service. 40 CFR 63 Subpart CC was amended under the Refinery Sector Risk and Technology Review (RTR) initiative on December 1, 2015 to revise the definition of Group 1 storage vessels to include smaller tanks with lower vapor pressures.

At an existing source such as the Anacortes Refinery, a CC Group 1 storage tank is a designation for storage vessels with:

- A design capacity greater than or equal to 40,000 gallons and stored-liquid maximum true vapor pressure greater than or equal to 0.75 psi and annual average HAP liquid concentration greater than 4 percent by weight total organic HAP.
- A design storage capacity greater than or equal to 20,000 gallons and less than 40,000 gallons and stored-liquid maximum true vapor pressure greater than or equal to 1.9 psi and annual average HAP liquid concentration greater than 4 percent by weight total organic HAP.

CC Group 2 storage tanks are those that are not designated as CC Group 1 tanks.

This RTR update also included a cross-reference to the Generic MACT (e.g., 40 CFR 63 Subparts WW (for storage vessels) and SS (for closed vent systems)) to require controls on floating roof fittings (e.g., guidepoles, ladder wells and access hatches).

Further discussion of regulatory overlap and specific tank requirements are discussed in SOB Section 3.6.

Wastewater: 40 CFR 63 Subpart CC applies to wastewater streams and treatment operations associated with petroleum refining process units that contain or contact a listed HAP. 40 CFR 63 Subpart CC designates wastewater streams as Group 1 or Group 2 based on the HAP content and VOC emissions.

A Group 1 wastewater stream means a wastewater stream that has a flow rate of 0.02 liters per minute or greater, a benzene concentration of 10 parts per million by weight or greater, and is not exempt from control requirements under 61 Subpart FF.

A Group 2 wastewater stream is a wastewater stream that does not meet the definition of a Group 1 wastewater stream.

63 Subpart CC requirements have been incorporated as appropriate into the Oily Wastewater Collection and Treatment in AOP Sections 1 and 5. See SOB Section 3.5 for a further discussion of regulatory applicability to the oily wastewater collection and treatment system.

Equipment Leaks (LDAR): Each individual component that is in HAP service is required to be included in the facility 63 Subpart CC Leak Detection and Repair (LDAR) program. Further discussion of LDAR requirements at the refinery and their applicable requirements can be found in SOB Section 3.4.

Pressure Relief Devices (PRDs): 63 Subpart CC requires controls and additional monitoring of the control device for all PRDs in HAP service. Many PRDs at the Anacortes Refinery are controlled, being routed through a closed vent system to a control device (i.e., the refinery flare system). Note that the Anacortes Refinery maintains both pilot-operated and balanced bellows PRDs the primary release valve of which is routed to the control system subject to these requirements.

For PRDs that are released to atmosphere (i.e., atmospheric PRDs), 63 Subpart CC requires operating and pressure relief requirements and management of releases. The requirements are listed for these specific types of PRDs within the requirement tables in the AOP for the individual process units. 37 atmospheric PRDs in 7 process units were identified as of the initial Notification of Compliance Status, submitted July 10, 2019.

Gasoline Loading Racks: For gasoline loading racks such as the Truck Rack at the Anacortes Refinery that are subject to 60 Subpart XX and 63 Subpart CC, the rack is only required to comply with 63 Subpart CC. Note that 63 Subpart CC mandates that subject racks comply with various referenced sections of 40 CFR 63 Subpart R; 63 Subpart R then references various sections of 60 Subpart XX.

63 Subpart CC requires only an initial performance test to demonstrate compliance with its emission limit of 10 milligrams of total organic compounds per liter of gasoline loaded. This requirement has been gap-filled by relying on the CEMS and periodic performance testing required under OAC 1171a to demonstrate on-going compliance.

Marine Vessel Loading Operations: Marine vessel loading operations are subject to 40 CFR 63 Subpart CC if they are located at a major source of HAPs, have equipment that contains or contacts one or more of the listed HAPs, and meet the applicability criteria under 63 Subpart Y (63.560). Because Anacortes Refinery's marine terminal is subject to the submerged loading requirement in 63 Subpart Y, it is not subject to 63 Subpart CC.

Heat Exchangers: As part of addressing residual risk, EPA promulgated requirements addressing HAP emissions from heat exchanger leaks at refineries in 40 CFR 63 Subpart CC on June 30, 2010. On June 20, 2013, the EPA published amendments. The regulation includes monitoring requirements with leak definitions and repair scheduling obligations for both closed-loop and once-through systems. Anacortes Refinery only has closed-loop systems so the once-through requirements were not addressed in the AOP.

The subject heat exchangers must be "in organic HAP service" which is defined as having at least 5 wt% of listed HAPs. In addition, there are two exemptions: exchangers where the minimum pressure on the cooling water side is at least 35 kPa (~5.1 psia) greater than the maximum pressure on the process side and exchangers that employ an intervening cooling fluid that has less than 5 wt% HAP that is not sent to a cooling tower or discharged, which essentially isolates the cooling water from the process fluid. At this writing, the refinery has 4 closed-loop systems. The cooling towers are monitored quarterly with a leak action level of 3.1 ppmv. Requirements for heat exchangers are listed in AOP Section 5.8 for the Utilities Plant.

Flares: While flares are not explicitly affected sources under 40 CFR 63 Subpart CC, flares are commonly used as control devices to meet 63 Subpart CC so 63 Subpart CC has requirements for flare operation under 63.670 and 63.671. 63 Subpart CC also has overlap provisions for flares subject to other regulations (40 CFR 63.640(s)) stating that on January 30, 2019, flares that are subject to the provisions of 60.18 or 63.11 and also subject to 63 Subpart CC are required to comply only with the provisions specified in 63 Subpart CC.

In addition, under 63.640(d), emission points routed to a fuel gas system, as defined in 63.641, are not included as affected sources under 63 Subpart CC provided that any flares receiving gas from that fuel gas system are subject to 63.670. No other testing, monitoring, recordkeeping, or reporting is required for refinery fuel gas systems or emission points routed to refinery fuel gas systems.

As such, 63 Subpart CC is consolidating all the refinery flare requirements under 63 Subpart CC.

Benzene Fenceline Monitoring (BFLM): 40 CFR 63 Subpart CC requires refineries to measure benzene emissions along the refinery perimeter. To meet this requirement, Anacortes Refinery operates 15 sampling stations along the refinery's perimeter plus one field blank and a duplicate sampler. Each sampler continuously pulls ambient air through a passive diffusive tube for two weeks, after which the tubes are changed.

Benzene concentration for each two-week period from each sampler is reported to EPA on a quarterly basis. The lowest individual monitor reading is subtracted from the highest individual monitor reading for each two-week period to determine the benzene concentration difference (Δc). An annual rolling average Δc is calculated every two weeks from the most recent 26 two-week sampling periods. If the annual rolling average Δc exceeds the benzene action level (9 µg/m3), the refinery must perform a root cause and corrective action analysis; it does not constitute a violation of 63 Subpart CC. Because the fenceline benzene monitoring program applies facility-wide and is not associated with any individual processing unit, requirements are listed in AOP Section 4, under Generally Applicable Requirements.

The results of this monitoring can be found at:
https://awsedap.epa.gov/public/extensions/Fenceline_Monitoring/Fenceline_Monitoring.html?sheet=MonitoringDashboard

40 CFR 63 Subpart WW - National Emission Standards for Storage Vessels (Tanks)—Control Level 2 & 40 CFR 63 Subpart SS – National Emission Standards for Closed Vent Systems, Control Devices, Recovery Devices and Routing to a Fuel Gas System or a Process

40 CFR 63 Subparts WW and SS are part of the Generic MACT, which include requirements for storage vessels (tanks) and for closed vent systems, control devices and routing of air emissions to a fuel gas system or process, respectively. 40 CFR 63 Subpart CC was amended under the Refinery Sector Risk and Technology Review (RTR) initiative on December 1, 2015 to include a cross-reference to the these Generic MACT sections to require controls on floating roof fittings (e.g., guidepoles, ladder wells and access hatches).

Further discussion of regulatory overlap and specific tank requirements are discussed in SOB Section 3.6.

40 CFR 63 Subpart UUU - National Emission Standards for Hazardous Air Pollutants for Petroleum Refineries: Catalytic Cracking Units, Catalytic Reforming Units, and Sulfur Recovery Units

40 CFR 63 Subpart UUU applies to petroleum refineries located at a major source and establishes emission standards and requires compliance with emission limitations and work practice standards. 63 Subpart UUU applies to new, reconstructed or existing affected sources at a refinery and includes:

- Process vents or groups of process vents:
  - On CCUs associated with regeneration of the catalyst (i.e., catalyst regeneration flue gas vented through CO Boilers)
  - On Catalytic Reformer (CR) unit associated with regeneration of the catalyst, including vents used during:
    - Unit depressurization
    - Purging
    - Coke burn
    - Catalyst rejuvenation

  - SRUs or tail gas treatment unit (TGTU) serving SRUs
- Bypass lines serving new, existing, or reconstructed:
  - CCUs,
  - CRs, or
  - SRUs.

Note that Anacortes Refinery operates a bypass line on their CCU from the CCU regenerator routed to the Diversion Stack when the regenerator flue gas cannot either be routed through the CO Boilers or be treated in the scrubber. This may occur when COB 2 is down and during startups and shutdowns. This bypass line must comply with the applicable 63 Subpart UUU requirements. There is also a bypass line in the CR.

As was stated above, the Anacortes Refinery does not operate the SRU – the SRU is operated by Chemtrade; it is subject to 63 Subpart UUU requirements and addressed in Chemtrade's AOP.

40 CFR 63 Subpart UUU was promulgated on April 11, 2002. The 63 Subpart UUU compliance date was April 11, 2005. NWCAA granted Tesoro a one-year extension to meet requirements for controlling metal emissions from the CCU as required under 63.1564. This extension allowed the refinery time to install a non-venturi jet ejector-type flue gas scrubber (FGS) to control particulate matter that contains metals, as well as controlling sulfur dioxide.

63 Subpart UUU was amended under the Refinery Sector Risk and Technology Review (RTR) initiative on December 1, 2015. Then followed amendments based on petitions for reconsideration received by EPA, resulting in revisions finalized July 13, 2016, November 26, 2018, and most recently, February 4, 2020. The RTR amendments to 63 Subpart UUU resulted in the following changes to the affected source at Anacortes Refinery:

- Removal of startup, shutdown, and malfunction exemptions
- Addition of alternate work practices and associated monitoring systems during periods of startup and shutdown for CCUs and SRUs, and during periods of hot standby, for CCUs
- Requirement to conduct periodic performance tests for particulate matter and a one-time performance test for hydrogen cyanide (HCN) at CCUs (completed on June 12, 2015)
- Requirement to install a continuous opacity monitoring system (COMS) on CCU exhaust
- Establishment of emission limitations during purging operations for CRs

With this second renewal of the AOP, changes resulting from amendments to 63 Subpart UUU have been incorporated. In addition, Tesoro has reviewed 63 Subpart UUU and provided the NWCAA with the options it is currently employing for maintaining and demonstrating compliance. The AOP reflects these options only.

Catalytic Cracking Units (CCUs): 63 Subpart UUU limits CCU emissions of metal HAP with a particulate matter standard and organic HAP with a CO standard. Particulate emissions from Anacortes Refinery's CCU are controlled using a FGS. Compliance is demonstrated by meeting emission limitations, operating limitations such as monitoring scrubber liquid-to-gas ratio using continuous parameter monitoring systems (CPMS), and preparation of unit-specific operation, maintenance, and monitoring plans (OMMP) for particulate matter and

CO. The Anacortes Refinery established a minimum liquid-to-gas ratio during initial performance testing and subsequent testing in accordance with 63.1564(b).

Note that the Anacortes Refinery CCU is not subject to 60 Subpart J. Because of this, an AMP is not required in place of the COMS required under 63 Subpart UUU.

63 Subpart UUU limits CO emissions from the CCU to 500 ppmv on a dry basis. The Anacortes Refinery demonstrated during 1996 that the CCU CO emissions did not exceed 50 ppm for a 30-day period so the CCU is exempt from having to install a CO CEMS (63.1565(b)(i)). In addition, the CCU exhaust is vented into the CO Boilers, each of which are rated at greater than 44MW (i.e., 86MW each) (63.1565(b)(ii)) so is also exempt from installing a CO CEMS. Therefore, the compliance demonstration with the CO limit under 63 Subpart UUU is to operate in accordance with the operation, maintenance, and monitoring plan (63.1656(a)(3)).

With removal of the provisions that allowed for excess emissions during periods of startup, shutdown or malfunctions, Anacortes Refinery must now meet alternate work practices standards. For metal HAPs (particulate matter as surrogate) from the CCU during startup, shutdown or hot standby, the CCU must either maintain the liquid-to-gas ratio operating limit or maintain the inlet velocity to the primary internal cyclones of the catalytic cracking unit catalyst regenerator at or above 20 feet per second. For organic HAPs (CO as a surrogate) from the CCU during startup, shutdown or hot standby, the CCU must meet an alternative limit of 1 vol% oxygen (wet or dry basis) in the regenerator exhaust gas may be used in lieu of meeting the CO limit.

Catalytic Reformers (CRs): 63 Subpart UUU limits emission of organic HAP for each applicable process vent on a new or existing CR during catalyst depressuring and purging operations and inorganic HAP during coke burn-off and catalyst rejuvenation.

Organic HAP emissions are limited by venting emissions during catalyst depressurizing and purging operations to a flare meeting the requirements of 63.670. Compliance is demonstrated by limiting visible emissions from the flare; ensuring the flare pilot light is present at all times; operating the flare at all times emission are vented to it; determining flare exit velocity and net heating value for the gas being combusted; conducting visible emission observations; and installing and operating a flare monitoring system that meets the requirements of 63.670 and 63.671.

Inorganic HAP emissions from each existing semi-regenerative CR during coke burn-off and catalyst rejuvenation are limited by reducing the uncontrolled emissions of HCl to a concentration of no more than 10 ppmv (dry basis), corrected to 3% oxygen.

On January 21, 2005 and on July 30, 2007, Tesoro submitted an alternative monitoring plan (AMP) to EPA Region 10 for compliance with the inorganic HAP (i.e., HCl) provisions of 63.1573 for the Catalytic Reformer reactor vent. The AMP involves monitoring scrubber solution pH and the liquid-to-gas ratio to ensure adequate HCl removal. The pH and liquid-to-gas ratio minimums were established during initial performance testing in accordance with 63.1567. Because this AMP is complex and it would be difficult to incorporate the requirements into the relevant AOP Terms, AOP Term 5.2.2 directly references the AMP so, for clarity and ease of implementation, the AMP is included as AOP Section 7.2.

Operation, Maintenance and Monitoring Plans (OMMP): The initial Notification of Compliance Status (NOCS) for 63 Subpart UUU were received by NWCAA on September 1, 2005 for the Catalytic Reformer, and on September 5 and 7, 2005 and September 23, 2006 for the CCU. Compliance with the initial OMMP provisions was met by the submission of the OMMPs for the Catalytic Reformer and the CCU with the initial NOCS. The initial OMMPs were approved by the NWCAA on October 10, 2006.

Subsequent OMMP versions were submitted as follows:

- CR dated February 25, 2019 (approved November 12, 2020), September 10, 2021 (approved April 14, 2023), and March 13, 2023 (approved April 14, 2023)
- CCU metal HAP & bypass dated January 25, 2010 (approved February 4, 2010), May 15, 2017 (approved November 12, 2020), August 31, 2017 (approved November 12, 2020), and June 12, 2020 (approved November 12, 2020)
- CCU organic HAP dated August 30, 2006 (approved October 10, 2006), January 25, 2010 (approved February 4, 2010), August 31, 2017 (approved February 16, 2024), and December 15, 2023 (approved February 16, 2024).

40 CFR 63 Subpart EEEE – National Emission Standards for Hazardous Air Pollutants: Organic Liquids Distribution (Non-Gasoline)

40 CFR 63 Subpart EEEE applies to non-gasoline organic liquid distribution (OLD) activities in HAP service at the refinery, that are not already regulated under 40 CFR Part 63 (e.g., 63 Subpart CC). Organic liquid for the purposes of Subpart EEEE is defined as any non-crude oil liquid or liquid mixture that contains 5 percent by weight or greater of listed HAP.

Isom Unit: The Isom unit includes a 2,245-gallon pressurized perchloroethylene process storage vessel and perchloroethylene transfer rack used to fill the tank. The tank is pressurized during normal operation but vented to the flare to control emissions during over pressurization.

The equipment components in perchloroethylene service are subject to the LDAR requirements of 40 CFR 63 Subpart CC, and therefore excluded from the affected source in 40 CFR 63 Subpart EEEE under 63.2338(c)(1).

The perchloroethylene tank is less than 5,000 gallons and is periodically refilled by cargo tank at the perchloroethylene transfer rack. The refinery does not use the transfer rack to transfer perchloroethylene out of the refinery. Consequently, controls are not required in accordance with 63.2343(a). Instead, the refinery is only required to keep up-to-date documentation that verifies that the storage tank and transfer rack are not required to be controlled. This recordkeeping requirement is included in the AOP.

Feedstocks Unloading Facility: The feedstock material is assumed to have a HAP content greater than 5% by weight so it is an organic liquid potentially subject to 63 Subpart EEEE. 40 CFR 63 Subpart CC only applies to gasoline loading racks so the Feedstocks Unloading Rack is not subject to 63 Subpart CC. As such, the Feedstocks Unloading Rack is subject to 63 Subpart EEEE.

However, because the Feedstocks Unloading Rack only unloads organic liquids, it is not subject to the 63 Subpart EEEE control requirements; it is only subject to certain notification, recordkeeping, and reporting requirements that are reflected in the AOP.

40 CFR 63 Subpart ZZZZ—National Emissions Standards for Hazardous Air Pollutants for Stationary Reciprocating Internal Combustion Engines

40 CFR 63 Subpart ZZZZ establishes national emission limitations and operating limitations for hazardous air pollutants (HAP) emitted from stationary reciprocating internal combustion engines (RICE)[1] located at major and area sources of HAP emissions. This subpart applies to

[1] A stationary RICE is any internal combustion engine which uses reciprocating motion to convert heat energy into mechanical work and which is not mobile. Stationary RICE differ from mobile RICE in that a stationary RICE is not a non-road engine as defined at 40 CFR 1068.30, and is not used to propel a motor vehicle or a vehicle used solely for competition.

each "affected source", which consists of any existing, new, or reconstructed stationary RICE, excluding those being tested at a stationary test cell/stand.

Note that 63 Subpart ZZZZ, 60 Subpart IIII, and 60 Subpart JJJJ apply to similar sources. Depending on the source type, compliance with 63 Subpart ZZZZ may be demonstrated by complying with 60 Subparts IIII or JJJJ.

All of the RICE located at the refinery (i.e., a major source), as listed in SOB Table 3-3, are diesel-fired, compression-ignition (CI) engines with less than 10 liters per cylinder.

Table 3-3: Reciprocating Internal Combustion Engines Subject to 40 CFR 63 Subpart ZZZZ

Engine	Const.	Manuf.	HP	Fuel	Subject	Service
40 CFR 63 Subpart ZZZZ Category: Existing, Emergency, Compression-Ignition RICE ≤ 500 hp						
GEN-763	2000	6/30/00	465	Diesel	63 Subpart ZZZZ	Boilerhouse generator
GEN-764	1990	1990	75	Diesel	63 Subpart ZZZZ	Radio Tower generator
40 CFR 63 Subpart ZZZZ Category: New, Emergency, Compression-Ignition RICE ≤ 500 hp						
GEN-765	2010	2010	250	Diesel	60 Subpart IIII & 63 Subpart ZZZZ	Admin Building generator (Tier 3)
40 CFR 63 Subpart ZZZZ Category: New, Emergency, Compression-Ignition Fire Pump RICE ≤ 500 hp						
ENG-811	2008	9/3/08	250	Diesel	60 Subpart IIII & 63 Subpart ZZZZ	Fire Water Pump
ENG-812	2008	9/3/08	250	Diesel	60 Subpart IIII & 63 Subpart ZZZZ	Fire Water Pump
40 CFR 63 Subpart ZZZZ Category: New, Emergency, Compression-Ignition RICE > 500 hp						
J-750	2015	6/1/15 rebuilt	563	Diesel	60 Subpart IIII & 63 Subpart ZZZZ	Portable Air Compressor (Tier 3)

"Existing" under 63 Subpart ZZZZ means constructed (i.e., installed) before June 12, 2006. "New" means constructed on or after June 12, 2006 for engines ≤ 500 hp, and constructed on or after December 19, 2002 for engines > 500 hp.

Under 63 Subpart ZZZZ 63.6640(f), emergency engines at a major source of HAPs are allowed to operate for up to 100 hours in a calendar year for maintenance checks and readiness testing. Up to 50 of the 100 hours may be used for other non-emergency purposes provided they are not used for peak shaving, non-emergency demand response, or to generate income for a facility to supply power to an electric grid or otherwise supply power as part of a financial arrangement with another entity as prohibited by 63.6640(f)(4).

There are no limits on the number of hours that emergency engines can operate in emergency service.

If an emergency engine is not operated according to these emergency engine requirements, the engine will no longer be considered an emergency engine and will need to meet all the requirements for nonemergency engines.

63 Subpart ZZZZ includes specific requirements for engines that are controlled by diesel particulate filters. None of the stationary RICE located at the refinery are equipped with diesel particulate filters so those requirements are not listed in the AOP.

Engine J-750 powers a portable air compressor that can be readily relocated throughout the refinery. For operational flexibility the engine is considered a stationary source that may remain at a single location within the refinery for more than 12 months at a time. For this reason the engine is not classified as a non-road engine. As a stationary source it is subject to 40 CFR 60 Subpart IIII and 40 CFR 63 Subpart ZZZZ.

Most of the engines at the refinery are "new" as defined in 63 Subpart ZZZZ, and subject to 40 CFR 60 Subpart IIII. In accordance with 63.6590(c) of 63 Subpart ZZZZ, a new engine complies with 63 Subpart ZZZZ by meeting the requirements of 60 Subpart IIII with no further obligations. As such, the applicable requirements from 60 Subpart IIII are included in AOP Section 5.

The other engines at the refinery are "existing" as defined in 63 Subpart ZZZZ. For these existing engines, 63 Subpart ZZZZ does not impose any numerical operating limitations, fuel requirements, performance tests, initial compliance or notification requirements. The specifically applicable requirements from 63 Subpart ZZZZ, including maintenance requirements, for subject engines are included in AOP Section 5.

63 Subpart ZZZZ does not have any recordkeeping of run time hours for emergency engines larger than 500 hp, even though the rule limits the number of run time hours these engines can operate in non-emergency service each calendar year. The AOP has been gap-filled to require recordkeeping of run time hours for engines greater than 500 hp (GEN-763 and GEN-764) consistent with 63 Subpart ZZZZ recordkeeping provisions for engines equal to or less than 500 hp.

For new engines, 63 Subpart ZZZZ and 60 Subpart IIII do not have any recordkeeping requirements to demonstrate compliance related to manufacturer's data indicating compliance with 60 Subpart IIII: manufacturer's emission-related written instructions, maintenance and repair activity performed on the engine, or fuel specification for the engines; all of which are requirements of the federal rules. These records are required in the AOP through the Agency's gap-filling authority.

Part 63 Subpart DDDDD – National Emission Standards for Hazardous Air Pollutants for Major Sources: Industrial, Commercial, and Institutional Boilers and Process Heaters

40 CFR 63 Subpart DDDDD applies to industrial, commercial, or institutional boilers and process heaters located at a major source of hazardous air pollutants (HAPs). The rule is commonly referred to as the Boiler MACT.

SOB Table 3-4 lists the process heaters and boilers at the refinery subject to 40 CFR 63 Subpart DDDDD.

Table 3-4: Process Heaters and Boilers subject to Subpart DDDDD

Unit	Description	Constr.	Heat Rate (MMBtu/hr)	Fuel
Crude Processing Area				
F-101	Crude Heater	1955	120	Refinery fuel gas
F-102	Crude Heater	1955	120	Refinery fuel gas
F-103	Crude Heater	1963	132	Refinery fuel gas
F-201	Vacuum Flasher Heater	1955	96	Refinery fuel gas
Hydrotreating Processing Area				
F-104	CGS Reboiler	1972	60	Refinery fuel gas
F-654	CFH Feed Heater	1964	15	Refinery fuel gas
F-652	DHT Feed Heater	1961	67	Refinery fuel gas
F-6600	NHT Feed Heater	1972	65	Refinery fuel gas
F-6601	NHT Reboiler	1972	68	Refinery fuel gas
F-6650	CR Feed Heater	1972	143	Refinery fuel gas
F-6651	CR Heater 1	1972	143	Refinery fuel gas
F-6652	CR Heater 2	1972	67	Refinery fuel gas
F-6653	CR Heater 3	1972	38	Refinery fuel gas
F-6654	CR Heater	1972	32	Refinery fuel gas
F-6655	CR Heater	1972	27	Refinery fuel gas
CCU				
F-301	CCU Feed Heater	1955	128	Refinery fuel gas
BenSat Unit				
F-6602	BenSat Reboiler	1972	73.5	Natural gas
Utilities Plan				
F-751	Boiler*	1954	268	Refinery fuel gas
F-752	Boiler*	1954	268	Refinery fuel gas
F-753	Boiler*	1994	220	Natural gas/propane

* With oxygen trim

All of the process heaters and boilers at the refinery subject to 63 Subpart DDDDD are fired on natural gas and/or refinery fuel gas and fall under the “units designed to burn gas 1 fuels” (gas 1) subcategory. All of the subject heaters and boilers are considered "existing" under the rule because they were constructed before June 4, 2010.

63 Subpart DDDDD does not require any pollutant-specific emission limits for process heaters and boilers designed for gas 1 fuels. Instead, it requires work-practice standards involving periodic tune-ups for affected process heaters and boilers. There are no heaters or boilers at the refinery that are set up to burn oil as a backup fuel, so the backup fuel provisions for gas 1 heaters and boilers are not included in the AOP.

All three boilers at the Utility Plant (F-751, F-752, & F-753) are equipped with continuous oxygen trim systems. Under 63 Subpart DDDDD, heaters and boilers designed to burn gas 1 fuels and equipped with oxygen trim must be tuned-up at least once every five years (61 months). All process heaters at the refinery do not use oxygen trim to comply with 63 Subpart DDDDD so tune-ups are required annually.

The rule also requires a one-time only energy assessment with the report due no later than January 31, 2016. Tesoro submitted an energy assessment dated September 15, 2015. Because the energy assessment has been completed, it is not included in the AOP.

The two CO Boilers (F-302 and F-304) at the CCU potentially qualify as boilers under 63 Subpart DDDDD. However, because they are also subject to 40 CFR 63 Subpart UUU, it is not subject to Subpart DDDDD pursuant to the 63.7491(h) overlap provision in Subpart DDDDD.

The CCU also includes a Startup Air Preheater (F-303) that directly fires into the CCU prior to the regeneration section. In general, this Startup Air Preheater is not used except during startups and in some cases during troubleshooting. The CCU Startup Air Preheater is not considered a process heater by definition under 63 Subpart DDDDD because it is direct fired.

40 CFR Part 63 Subpart GGGGG - National Emission Standards For Hazardous Air Pollutants: Site Remediation

This regulation controls the emissions of hazardous air pollutants (HAP) at facilities where remediation activities are used to clean up spills and contaminated soil. The Anacortes Refinery is only subject to the recordkeeping requirements of the regulation when meeting either of the following conditions:

- The remediation is completed in no more than 30 consecutive calendar days (must maintain records for each short term project), or
- The total quantity of all HAP contained in all extracted remediation material for all remediation activities for each year is less than one megagram, the facility must maintain records to demonstrate compliance.

Since these requirements apply refinery-wide and not to a particular emission unit, they are included in AOP Section 4.

3.3.3 40 CFR Part 68 - Risk Management Plan

The goal of 40 CFR Part 68 and the risk management program is to prevent accidental releases of substances that can cause serious harm to the public and the environment from short-term exposures and to mitigate the severity of releases that do occur. If a facility contains the hazardous or flammable substances listed in 40 CFR 68.130 in an amount above the "threshold quantity" specified for that substance, the facility operator is required to develop and implement a risk management program.

The Anacortes Refinery maintains several substances in quantities greater than the listed thresholds. As such, Tesoro submits RMP to the EPA as appropriate. This regulation is implemented in its entirety by the EPA. The refinery certifies ongoing compliance with all applicable requirements of 40 CFR 68 in their annual compliance certification.

3.3.4 40 CFR Part 98 – Federal Mandatory Greenhouse Gas Emission Inventory Regulation

This regulation applies to the Anacortes Refinery due to the quantity of greenhouse gases (GHG) emitted and type of facility. The rule requires annual GHG inventories and reporting beginning in calendar year 2010, with reports due to EPA by no later than March 31 of the following year. This regulation is implemented in its entirety by the EPA. While this regulation is applicable to Tesoro, it is excluded from appearing in the AOP because it is not an "applicable requirement" as defined in WAC 173-401-200(4).

3.4 Leak Detection and Repair (LDAR)

The equipment leak program (referred to as Leak Detection and Repair (LDAR)) applies to most of the process units across the refinery. This discussion applies to pumps, pressure relief devices, sampling connection systems, open-ended valves or lines, valves, and flanges. Compressors are considered separate affected sources and their regulatory applicability are discussed below. Several regulatory programs potentially apply to refinery equipment leaks. These programs include:

- 40 CFR 60 Subpart GGG - Standards of Performance for Equipment Leaks of VOC in Petroleum Refineries for which Construction, Reconstruction, or Modification

Commenced After January 4, 1983, and on or Before November 7, 2006. This subpart requires compliance with 60 Subpart VV as modified by GGG.

- 40 CFR 60 Subpart GGGa - Standards of Performance for Equipment Leaks of VOC in Petroleum Refineries for Which Construction, Reconstruction, or Modification Commenced After November 7, 2006. This subpart requires compliance with 40 CFR 60 Subpart VVa as modified by GGGa.
- 40 CFR 61 Subpart J – National Emission Standard for Equipment Leaks (Fugitive Emission Sources) of Benzene
- 40 CFR 61 Subpart V - National Emission Standard for Equipment Leaks (Fugitive Emission Sources)
- 40 CFR 63 Subpart CC - National Emission Standards for Hazardous Air Pollutants From Petroleum Refineries
- NWCAA 580.8 - Petroleum Refinery Equipment Leaks
- OAC Best Available Control Technology (BACT)
- Compliance Order 1006-23-08 (CO23)

The applicability of these programs depends variously on construction/modification date, service VOC content, service HAP content, and process unit boundary as discussed below.

SOB Table 3-5 lists each process unit and the applicability of each potentially-subject LDAR program.

Table 3-5: Process Unit Equipment Leak Program Applicability

Process Unit/Area	60 GGG	60 GGGa	63 CC	61 J/V	OAC	580.8	CO23
Primary Crude Oil Process Area							
Crude	X	* (1205)	X		1205		X
Vacuum Flasher	X	* (1205)	X		1205		X
ROSE	X (enhanced)		** (744a)		744a		X
Hydroprocessing Area							
CGS/JFT	X	* (827c)	X		827c/896a/ 901a/1205/ 1222a		X
CFH/DHT	X	* (1205)	X				X
CR/NHT	X	* (1205)	X				X
SHU	X	* (989b)	X		989b		X
Other Process Areas							
CCU		X	X		1182/1190		X
Amine 2	X	* (952c)	X		952c		X
BenSat/RSC		X	X	X	1037b		X
Isom***		X	X	X	1222a		--
BI		X	X		--	X	X
Alky		X	X		1182	X	X
Flare		X	X		1182		X
Transfer Facilities							
Truck Rack		X	X		1171a/1317		X
Wharf/Logistics			X				X
LPG loading						X	--
Feedstocks Unloading		X	X		1190		X
CROF		X	X				X

Process Unit/Area	60 GGG	60 GGGa	63 CC	61 J/V	OAC	580.8	CO23
Storage Vessels & Tank Farms							
Tank Farms 1 & 2		X	X		1171a	X	X

* A project triggered 60 Subpart GGGa applicability but because it was already subject to 60 Subpart GGG, applicability could not move to 60 Subpart GGGa, but 60 Subpart GGGa was required as BACT in the OAC.
** The ROSE unit is not in HAP service. However, OAC 744 determined BACT to be compliance with the new source requirements under 63 Subpart CC (i.e., comply with 60 Subpart VV requirements as modified by 63 Subpart H).
***The Isomerization Unit started up after the Consent Decree trigger date so is not subject to CO23. Under the refinery LDAR program, the Isom Unit is combined with the CR/NHT for leak percentage determination.

Note that 60 Subparts GGG and GGGa apply on a process-unit basis. However, in some of the OAC BACT determinations, it is not clear whether the OAC BACT applies to only those components that were added versus the entire process unit. Due to this lack of clarity, the OAC field in SOB Table 3-5 for certain process units has multiple OACs listed across multiple process units.

History: The refinery LDAR program was initiated with the applicability of initial NSPS rules and has evolved to include additional local and federal requirements as well as BACT applied under OAC conditions, and the recent Consent Decree. The LDAR program expanded in late 1990s in response to the NWCAA Regulation 580, and subsequent promulgation of 63 Subpart CC.

The refinery originally opted to meet the annual performance test demonstration approach to the regulations, requiring annual monitoring on a unit-by-unit basis. Each unit complying with the LDAR provisions of 60 Subpart VV were required to be monitored within a one-week time period. This compliance option proved to be onerous for scheduling and coordination. In 2004 and 2005, the facility transitioned to skip-period monitoring basing the initial skip periods on the previous annual monitoring results. The facility had consistently performed at less than 2.0% leak rates and was granted the transition to annual skip monitoring directly.

40 CFR 60 Subparts GGG & GGGa/OAC BACT: Enhanced LDAR requirements (i.e., compliance with 60 Subpart GGG modified with lower leak definitions) were applied to the refinery as BACT through New Source Review permitting starting in the 1990s. The permits required compliance with the new equipment provisions of 63 Subpart H. The goal of the reference was to impose lower leak definitions for valves and pumps. However, the overlap of regulatory frameworks proved confusing in that the two programs have different requirements for recordkeeping and reporting.

In 2008, the refinery requested to align the language of the New Source Review permits (OACs) to a 60 Subpart GGG-based LDAR program but with the lower leak definitions from 63 Subpart H (i.e., enhanced 60 Subpart VV). The OACs also require the use of calibration gases that are closer to the enhanced leak standards. Some of the OACs require that the enhanced LDAR program be applied throughout a particular process unit. Other OACs required that the LDAR program be applied only to those components that were installed or repurposed as part of the approved project. The enhanced LDAR requirements were issued as revised OACs in 2009 and incorporated into the 2010 AOP renewal.

A new version of the NSPS, 40 CFR 60 Subpart GGGa, for refinery LDAR was promulgated for process units constructed or modified after November 7, 2006 that has leak definitions that are lower than those of 60 Subpart VV. As a result, the Agency has relied on 60 Subpart GGGa as BACT for refinery equipment leaks during project permitting since 2007.

To make the refinery LDAR program more consistent overall, as part of the 2023 AOP renewal, the BACT in several OACs was changed to reference 60 Subpart GGGa rather than spelling out the lower leak definitions or referencing 60 Subpart H.

Language in 60 Subpart GGGa states that those affected sources that are subject to 60 Subpart GGG cannot be subject to 60 Subpart GGGa. Therefore, those units subject to 60 Subpart GGG could not transition to 60 Subpart GGGa. This was memorialized in several OACs as 60 Subpart GGG being listed in the permit introduction as directly applicable while enhanced LDAR as a reference to 60 Subpart GGGa was listed as BACT.

40 CFR 61 Subparts J & V: 40 CFR 61 Subpart J applies to equipment leaks in benzene service. In benzene service is defined as contacting a fluid, either gaseous or liquid, that is at least 10 percent benzene by weight. 61 Subpart J was promulgated prior to September 4, 2007. 61 Subpart J generally points to 61 Subpart V for compliance requirements.

40 CFR 63 Subpart CC: Refinery equipment leaks are also subject to 63 Subpart CC depending upon whether the equipment contacts material that contacts one or more of the listed HAPs. As such, 63 Subpart CC applies to only those components in HAP service, not on a process unit basis. Generally, 63 Subpart CC points to 60 Subpart VV requirements.

However, for those components subject to both 63 Subpart CC and other equipment leak requirements, 63 Subpart CC includes overlap provisions. For those components subject to 63 Subpart CC and other equipment leak requirements under 40 CFR Parts 60 and 61 promulgated prior to September 4, 2007 (e.g., 60 Subpart GGG, 61 Subpart J), they must comply with 63 Subpart CC requirements (which generally point to 60 Subpart VV). For those components subject to 63 Subpart CC and 60 Subpart GGGa, they must comply with 60 Subpart GGGa requirements (which generally point to 60 Subpart VVa). Note, however, that these overlap provisions do not erase the applicability of the original regulation; compliance with the original regulation is being shown through compliance with the referenced regulation.

NWCAA 580.8: NWCAA 580.8 applies to equipment leaks at refinery process units that utilize butane or lighter hydrocarbons as a primary feedstock, including alkylation, polymerization, and LPG loading. Generally, NWCAA 580.8 points to compliance with 60 Subpart GGG.

Compliance Order 1006-23-08 (CO23): Due in part to past uncertainties with regard to 60 Subpart GGGa applicability, the 2016 Consent Decree was signed requiring all potential 60 Subpart GGGa subject process units to become affected sources subject to 60 Subpart GGGa and its more stringent LDAR standards under 60 Subpart VVa. As mandated by the 2016 Consent Decree, NWCAA issued Compliance Order 1006-23-08 (CO23) to memorialize this requirement for after termination of the Consent Decree.

As a consequence, all Anacortes Refinery process units are affected sources under 60 Subpart GGGa and, if triggered, are no longer directly subject to 60 Subpart GGG. As such, 60 Subpart GGG is not listed in the AOP, only 60 Subpart GGGa and its referenced LDAR program under 60 Subpart VVa. However, this determination does not change any OAC BACT determination or the applicability of NWCAA 580.8.

BenSat & Isom Units: The BenSat Unit and the Isom Unit are in benzene service and are, therefore, subject to 61 Subpart J requirements. They are also variously subject to 60 Subpart GGGa, 63 Subpart CC, OAC 1037b, OAC 1222a, and CO23.

40 CFR 61 Subpart J applies to pumps, compressors, pressure relief devices, sampling connection systems, open-ended valves or lines, valves, connectors, *surge control vessels*, *bottoms receivers*, and control devices or systems Note that surge control vessels and

bottoms receivers are not included as subject equipment in 63 Subpart CC or 60 Subpart GGGa.

For pumps, compressors, pressure relief devices, sampling connection systems, open-ended valves or lines, valves, connectors, and control devices or systems: Because 61 Subpart J was promulgated prior to September 4, 2007, the overlap provisions in 63 Subpart CC require that the components comply with the 63 Subpart CC requirements and overwrite the applicable 61 Subpart J requirements (i.e., the recordkeeping in 61.246(i) for all listed fugitive components). Because the components are also subject to 60 Subpart GGGa, another 63 Subpart CC requirement (the overlap provision) is that the unit comply with 60 Subpart GGGa requirements. As such, the listed components at the BenSat Unit and the Isom Unit must comply with 60 Subpart GGGa which will also serve to comply with both 61 Subpart J and 63 Subpart CC.

For surge control vessels and bottoms receivers: Because surge control vessels and bottoms receivers are subject to 61 Subpart J but not 63 Subpart CC or 60 Subpart GGGa, they are not subject to any of the overlap provisions. As such, they are directly subject to 61 Subpart J. Because the Anacortes Refinery is designed to produce or use less than 1,000 megagrams of benzene per year, it is exempt from the 61 Subpart J standards under 61.112 but must keep records as required in 61.246(i) under 40 CFR 61 Subpart V.

Compressors

Compressors are listed separately from other equipment leaks (i.e., pumps, pressure relief devices, sampling connection systems, open-ended valves or lines, valves, and flanges) because they are considered separate affected sources. Compressors are potentially subject to the same regulatory programs as listed under equipment leaks above.

There are a number of compressors at the refinery that are required to minimize potential leaks of VOC and HAPs. SOB Table 3-6 lists each compressor, its location and the applicable regulatory requirements at the refinery.

Table 3-6: Process Unit Compressor Leak Program Applicability

Process Unit/Area	60 GGG	60 GGGa	63 CC	OAC	580.8	Notes*
Vacuum Flasher						
J-205		X	X	1205		
J-206		X	X	1205		
Residuum Oil Supercritical Extraction (ROSE)						
J-5700	X			744a		NDE
Naphtha Hydrotreater (NHT)						
J-606		X	X	1222a		H2 service
J-6651		X	X	1222a		H2 service
J-6654		X	X	1222a		H2 service
J-6655		X	X	1222a		H2 service
Clean Fuels Hydrotreater/Diesel Hydrotreater (CFH/DHT)						
J-600	X		X	901a		OOS (2019)
J-650	X		X	901a		H2 service
J-651	X		X	901a		H2 service
J-652	X		X	901a		H2 service
Catalytic Reformer (CR)						
J-6650	X		X	827c		H2 service
J-6653	X		X	827c		H2 service
Catalytic Cracking Unit (CCU)						

Process Unit/Area	60 GGG	60 GGGa	63 CC	OAC	580.8	Notes*
J-401	X		X	753		NDE
J-403	X		X	753		NDE
J-404	X		X	753		NDE
Alkylation (Alky)						
J-920 (non-HAP)		X		1249	X	NDE
Flare						
J-818		X	X	1182		
J-819		X	X	1182		

* NDE: No detectable emissions; H2 service: in hydrogen service; OOS: out of service

Retired compressors:
J-887 (Flare unit) – Replaced by J-818/819 in 2015 (OAC 1182)
J-901/902 (Alky) – Replaced by J-920 in 2018 (OAC 1249)
J-1401/1402 (Tank car rack) – permanently retired, not replaced
J-600 (DHT) – Out of service since 2019 but not officially retired with management of change

40 CFR 60 Subparts GGG (60.593(b)) and GGGa (60.593a(b)) exempt compressors in hydrogen service from complying with the standards under 60 Subparts VV and VVa, respectively. To demonstrate that a compressor is in hydrogen service, it must be determined that the percent hydrogen content can be reasonably expected always to exceed 50 percent by volume using either the specified methods or engineering judgment. Under its gap-filling authority, NWCAA mandated keeping records of the hydrogen service determination and updating the determination with changes in operation.

40 CFR 60 Subparts VV (60.482-3(i)) and VVa (60.482-3(i)) exempt compressors designated for no detectable emissions (NDE) from complying with the respective compressor standards as long as the compressor is tested annually to demonstrate it is operating with no detectable emissions, as indicated by an instrument reading of less than 500 ppm above background.

As such, only J-205 (VF), J-206 (VF), J-818 (FGR), and J-819 (FGR) are required to comply with the full 60 Subpart GGGa/63 Subpart CC LDAR requirements.

Compliance Order 1006-23-08 (CO23): The 2016 Consent Decree mandated that all potential 60 Subpart GGGa subject process units to become affected sources subject to 60 Subpart GGGa and its more stringent LDAR standards under 60 Subpart VVa. However, this mandate only applied to equipment leaks; compressors were explicitly excluded from this trigger. This exemption was carried through to CO23.

3.5 Oily Wastewater Collection and Treatment

The oily wastewater collection and treatment system and its various components at the refinery are regulated under three sets of requirements: 40 CFR 60 Subpart QQQ, 40 CFR 61 Subpart FF, and 40 CFR 63 Subpart CC. Each regulation applies to the refinery according to different criteria and at different affected facility levels. Individual federal regulation applicability is discussed in SOB Section 3.5. This section is intended to be a discussion of the interactions of the applicable rules and the general approach to the AOP.

40 CFR 60 Subpart QQQ applies to individual drain systems receiving process wastewater that are constructed or modified after May 4, 1987. Individual process units that triggered 60 Subpart QQQ are listed in SOB Section 3.5 under 60 Subpart QQQ.

As mentioned above, 63 Subpart CC defines a 63 Subpart CC Group 1 wastewater stream as a wastewater stream that has a flow rate of 0.02 liters per minute or greater, a benzene concentration of 10 parts per million by weight or greater, and is not exempt from control requirements under 61 Subpart FF.

Due to the overlap provision in 40 CFR 63 Subpart CC, individual drain systems subject to 60 Subpart QQQ must comply with 60 Subpart QQQ, except those considered 63 Subpart Group 1 wastewater streams. Individual drain systems handling 63 Subpart CC Group 1 wastewater streams must comply with the 63 Subpart CC provisions regardless of 40 CFR 60 Subpart QQQ applicability. Note that 63 Subpart CC points to compliance with in 40 CFR 61 Subpart FF (61.340 through 61.355).

SOB Table 3-7 identifies process areas at the refinery that have individual drain systems subject to 40 CFR 60 Subpart QQQ, and if that individual drain system is currently considered to be handling a 63 Subpart CC Group 1 wastewater stream.

Table 3-7: Individual Drain Systems Subject to 40 CFR 60 Subpart QQQ

Process Unit/Area	40 CFR 63 Subpart CC Group 1 Wastewater Stream?
ROSE Unit	Yes, comply with Subpart CC/FF
Clean Fuels Hydrotreater (CFH)/Distillate Hydrotreater (DHT)	Yes, comply with Subpart CC/FF
Selective Hydrogenation (SHU)	Yes, comply with Subpart CC/FF
Jet Fuel Treater	Yes, comply with Subpart CC/FF
Amine 2	Yes, comply with Subpart CC/FF
BenSat Unit	Yes, comply with Subpart CC/FF
Isomerization Unit	Yes, comply with Subpart CC/FF
Butane Isomerization	**No, comply with Subpart QQQ**
Truck Rack	Yes, comply with Subpart CC/FF
Wharf	Yes, comply with Subpart CC/FF
Feedstocks Unloading Facility	Yes, comply with Subpart CC/FF
Crude Railcar Offloading Facility (CROF)	Yes, comply with Subpart CC/FF
Storage Tanks 202, 203 and 231	Yes, comply with Subpart CC/FF
Storage Tanks 247 & 248	**No, comply with Subpart QQQ**

All wastewater streams facility-wide that generate benzene-containing hazardous waste must be managed under 40 CFR 61 Subpart FF. As such, it is assumed to apply facility-wide and is listed in AOP Section 5.17 for the Oily Wastewater Collection and Treatment process unit.

AOP Section 1 (Emission Unit Identification) identifies process drains at individual process units subject to 60 Subpart QQQ and/or 61 Subpart FF; however, not all drains at the process unit are necessarily subject to, or required to be, controlled under 61 Subpart FF. In the AOP requirement tables in AOP Section 5, drains listed for each process unit which are subject to 60 Subpart QQQ are referred to both AOP Section 6.5 (60 Subpart QQQ) and AOP Section 5.17 (61 Subpart FF) for compliance requirements to allow flexibility within the refinery (i.e., switching from a Group 1 to Group 2 wastewater stream or vice versa).

Requirements for drains in process units across the refinery that are subject to 63 Subpart CC (which references 61 Subpart FF requirements) are collectively addressed under the Oily Wastewater Collection and Treatment process unit in AOP Section 5.17. It is the refinery's responsibility to track applicability and control requirements for each drain (i.e., 61 Subpart FF, 60 Subpart QQQ, 63 Subpart CC).

3.6 Storage Tanks

There are a number of hydrocarbon storage tanks at the Anacortes Refinery. Most are located in one of the refinery's two tank farms. A handful of storage tanks are associated with the Effluent Plant.

Refinery storage tanks must comply with several regulatory programs as applicable. These programs include:

- 40 CFR 60 Subpart K - Standards of Performance for Storage Vessels for Petroleum Liquids for Which Construction, Reconstruction, or Modification Commenced After June 11, 1973, and Prior to May 19, 1978
- 40 CFR 60 Subpart Ka - Standards of Performance for Storage Vessels for Petroleum Liquids for Which Construction, Reconstruction, or Modification Commenced After May 18, 1978, and Prior to July 23, 1984
- 40 CFR 60 Subpart Kb: New Source Performance Standards for Volatile Organic Liquid Storage Vessels (Including Petroleum Liquid Storage Vessels) for Which Construction, Reconstruction, or Modification Commenced After July 23, 1984
- 40 CFR 61 Subpart FF: National Emission Standard for Benzene Waste Operations
- 40 CFR 63 Subpart CC: National Emission Standards for Hazardous Air Pollutants From Petroleum Refineries
- 40 CFR 63 Subpart WW: National Emission Standards for Storage Vessels (Tanks)—Control Level 2
- NWCAA Section 560: Storage of Organic Liquid
- NWCAA 580.3: High Vapor Pressure Volatile Organic Compound Storage Tanks
- NWCAA 580.9: High Vapor Pressure Volatile Organic Compound Storage in External Floating Roof Tanks

The applicability of these programs depends variously on tank capacity; construction, reconstruction, or modification date; vapor pressure (VP); and organic or HAP content of stored liquid. To demonstrate regulatory inapplicability for specific tanks, records demonstrating that the type of product stored and vapor pressures, periods of storage, and storage capacities of each tank should be kept.

The criteria for vessels that store volatile organic liquid (VOL) to be subject to specific control requirements are summarized in SOB Table 3-8. VOL are any organic liquids that have the potential to emit VOCs.

Table 3-8: Control Requirement Thresholds for Volatile Organic Liquid (VOL) Storage Vessels

Control Requirements Thresholds	kPa	psia
60 Subpart K & Ka control for tanks ≥ 40,000 gal (151 m^3)	(10.4)	1.5
60 Subpart Kb control for tanks ≥ 151 m^3 (40,000 gal)	5.2	(0.75)
60 Subpart Kb control for tanks ≥ 75 m^3 (19,800 gal)	27.6	(4.0)
63 Subpart CC Group 1 tanks: ≥ 177 m^3 (46,758 gal)	10.4	(1.5)
NWCAA control for tanks ≥ 40,000 gallons (151 m^3)	(10.4)	1.5
NWCAA & NSPS MTVP of stored VOL for EFR or IFR tanks	76.6	11.1

Note: Federal regulations use metric units, whereas the NWCAA regulation uses English units. Values in parentheses are calculated.

40 CFR 60 Subparts K, Ka, & Kb: Storage vessels with a capacity greater than or equal to 75 m^3 that are used to store volatile organic liquids (VOL) for which construction, reconstruction, or modification is commenced after July 23, 1984 are subject to 40 CFR 60 Subpart Kb. VOL for the purposes of 60 Subpart Kb are any organic liquids that have the potential to emit VOCs. The following refinery tanks listed in SOB Table 3-9 are subject to 60 Subpart Kb.

Table 3-9: Tanks Subject to 40 CFR 60 Subpart Kb

Tank	Type	Service	Const./Mod.	NSR Permit
39	IFR, 1,260,000 gal	Slops (backup)	Mod. 1992	OAC 362
40	IFR, 420,000 gal	Slops (pre-processed)	Mod. 1992	OAC 362
113	EFR, 1,260,000 gal	NHT Feed	Mod. 2017	OAC 1261
161	IFR, 2,268,000 gal	Ballast/ Desalter Brine	Mod. 1990	OAC 362
202	EFR, 7,350,000 gal	Gasoline	Const. 1993	OAC 358a
203	EFR, 7,350,000 gal	Gasoline	Const. 1993	OAC 358a
216	EFR, 4,284,000 gal	EP backup	Mod. 2008	--
231	EFR, 4,200,000 gal	Naphtha	Const. 1993	OAC 1050a
247	IFR, 840,000 gal, heated	CCU Feed	Mod. 2016	OAC 1190
248	IFR, 840,000 gal, heated	CCU Feed	Mod. 2016	OAC 1190
1407	IFR, 84,000 gal	Gasoline	Const. 2015	OAC 1171
1408	IFR, 42,000 gal	Ethanol	Const. 2015	OAC 1171

There may be storage vessels at the refinery that were constructed, reconstructed, or modified after July 23, 1984, that are exempt from 60 Subpart Kb because they: are pressure vessels, their capacity is less than regulatory thresholds, they do not store a volatile organic liquid, or they store organic liquids that have very low vapor pressures.

40 CFR 61 Subpart FF: 40 CFR 61 Subpart FF tanks receiving wastes in accordance with 61.342(c)(1)(ii), pursuant to 61.351(a), may meet the requirements in 40 CFR 60 Subpart Kb in lieu of the 61 Subpart FF control requirements in 61.343.

40 CFR 63 Subpart CC: Storage vessels associated with petroleum refinery process units that contact one or more of the listed HAPs are required to meet the requirements of 40 CFR 63 Subpart CC. As such, storage vessels can be subject to both 60 Subpart K, Ka, Kb and 63 Subpart CC requirements. 63 Subpart CC addresses this potential duplication using so-called overlap provisions under 63.640(n).

For storage vessels subject to both 63 Subpart CC (both CC Group 1 and 2) and 60 Subpart Kb, the vessels must comply with 60 Subpart Kb as modified in 63 Subpart CC. For CC Group 1 storage vessels also subject to 60 Subpart K or Ka, the vessel must comply with 63 Subpart CC.

For CC Group 2 vessels subject to the control requirements under Subpart K or Ka, they must comply with Subpart K or Ka, respectively. For CC Group 2 vessels subject to 60 Subpart K or Ka but not the associated control requirements, they must comply with 63 Subpart CC.

There are no overlap provisions for the overlap of 40 CFR 61 Subpart FF and 60 Subparts K, Ka, and Kb for storage tanks. However, 40 CFR 61 Subpart FF allows for an alternative standard, where the storage vessel may install either an internal or external floating roof as referenced in 60 Subpart Kb.

Note that the definition of storage vessel in 63 Subpart CC excludes wastewater storage tanks. Wastewater tanks are to be addressed under the wastewater provisions in 63 Subpart CC. The 63 Subpart CC wastewater provisions reference 40 CFR 61 Subpart FF requirements. 61 Subpart FF requirements then reference certain sections in 60 Subpart Kb.

40 CFR 63 Subpart WW: Generally, 40 CFR 63 Subpart CC Group 1 tanks must comply with 40 CFR 63 Subpart WW which includes controls on floating roof fittings. Per 40 CFR 63.646, once compliance is demonstrated with the standards in 63.660 for subject storage tanks, the standards in 63.646 no longer apply.

Subject tanks must have the deck fittings listed in 40 CFR 63.660(b) or those listed in 63 Subpart WW (63.1063(a)(2)(i)-(viii)) as modified by 63.660(b). If a storage tank does not have compliant fittings as of June 30, 2014, they have until the next vessel degassing or January 30, 2026, whichever occurs first, to comply. Per the updated Notification of Compliance Status (NOCS) dated January 30, 2024, 14 of the 32 tanks are equipped with compliant deck fittings. The Anacortes Refinery will complete the additional retrofits in time for the compliance date of January 30, 2026.

Those tanks that do not meet the deck fittings requirements under 63.660(b) must continue to meet the requirements under 63.646 until the 63.660(b) compliance date. As such, the deck fitting requirements under 63.646(f) are still listed in the AOP until the tanks must meet 63.660(b).

NWCAA Section 560, 580.3, & 580.9: NWCAA Section 560 mandates controls on the storage of organic liquid: petroleum liquids in vessels greater than 40,000 gallons or organic liquids or solvents with a TVP greater than 1.5 psia in vessels greater than 6,000 gallons.

NWCAA 580.3 applies to high vapor pressure volatile organic compound storage tanks: tanks which store VOC with a TVP as stored greater than 1.5 psia, but less than 77.7 Kpa (11.1 psia) at calendar-month average storage temperatures and have a capacity greater than 40,000 gallons.

Note that NWCAA 580.32 allows three options when defining a control strategy for controlled tanks:

> 580.32 It shall be unlawful for any person to cause or allow storage of volatile organic compounds as specified in Section 580.31 unless each storage tank or container:
>
> > 580.321 Meets the equipment specifications and maintenance requirements of the Federal Standards of Performance for New Stationary Sources -Storage Vessels for Petroleum Liquids (40 CFR 60, subpart Kb); or
> >
> > 580.322 Is retrofitted with a floating roof or internal floating cover using a metallic seal or a nonmetallic resilient seal at least meeting the equipment specifications of the Federal standards referred to in 580.321 of this subsection, or its equivalent; or
> >
> > 580.323 Is fitted with a floating roof or internal floating cover meeting the manufacturer's equipment specifications in effect when it was installed.

Because of the regulatory uncertainty associated with 580.322 and 580.323, the AOP is written assuming that the refinery is using 60 Subpart Kb as the control method. Therefore, citations to NWCAA 580.32 include references to the equipment specifications and maintenance sections of 60 Subpart Kb. Because this requirement only mandates the source to comply with 60 Subpart Kb and does not make the tank an affected source subject to 60 Subpart Kb, the overlap provision under 63 Subpart CC does not apply. As such, when both NWCAA 580.32 and 63 Subpart CC apply to a tank, both sets of requirements are listed (i.e., 60 Subpart Kb via reference from NWCAA 580.32 and 63 Subpart G via reference from 63 Subpart CC).

NWCAA 580.9 applies to high vapor pressure VOC storage in EFR tanks: VOC storage vessels equipped with EFRs, having capacities greater than 40,000 gallons.

Under the current version of NWCAA Section 580 (580.26 and 580.37), a storage tank that is subject to a federal rule (NSPS or NESHAP) is exempt from the requirements under NWCAA 580.3, 580.9, and Section 560. However, these exemptions are not in the current State Implementation Plan (SIP) and, therefore, are not federally enforceable. Because of this discrepancy, only the SIP-adopted version of these NWCAA citations are found in the AOP.

Many of the requirements in NWCAA Section 560, 580.3, and 580.9 do not have associated monitoring, recordkeeping, and reporting requirements; as such, monitoring requirements have been gap-filled into the AOP. Most of the gap-filled requirements parallel those required in the other applicable rules for the tank(s).

Tank 11: Tank 11 is a fixed roof tank in Catalytic Reformer feed service. The applicability of 63 Subpart CC changed due to the Refinery Sector Risk and Technology Review (RTR) initiative on December 1, 2015, which changed the status of Tank 11 – that is, it was a CC Group 2 tank but changed to CC Group 1 due to the change in true vapor pressure applicability threshold (from 1.5 psi to 0.75 psi). The Anacortes Refinery has until January 30, 2026, or the next time the tank is removed from service to come into compliance either as a CC Group 1 tank or a CC Group 2 tank, or to shut down. As of this writing, the Anacortes Refinery plans to install a chiller in 2025 to reliably bring the temperature of the material stored to be below the applicability threshold such that it remains a CC Group 2 tank. Until then, the tank must comply with 63 Subpart CC (63.646 & 63.655) as a CC Group 2 tank without the 63 Subpart WW reference.

Tanks 39 & 40: Tanks 39 and 40 receive slop oil in the wastewater treatment area of the facility, which can include either untreated slop oil (for example, skim oil from the API) or

treated oil. Untreated slop oil TVPs range from 0 to 10.5 psia and it has the potential to contain HAP. As such, both Tank 39 and Tank 40 are subject to CC Group 1 requirements in addition to NWCAA Section 560 and 580.3 monitoring, recordkeeping, and reporting. Note that they are also subject to 60 Subpart Kb requirements.

Tank 62: Tank 62 was a 126,000 gallon fixed roof tank constructed with the refinery in 1955. It was used as an emergency surge vessel to contain crude oil from potential over-pressuring events of the Trans Mountain Pipeline. NWCAA allowed the tank to be exempt from the requirement to have an internal roof under NWCAA 580.32 due to safety considerations as long as the tank was emptied and cleaned after each surge event in accordance with the Tank 62 Response Plan submitted to the NWCAA on June 1, 1995. Tank 62 was listed as an emission unit in the original AOP. In June 2010, Tank 62 was physically blinded from the pipeline and permanently taken out of service. Consequently, Tank 62 is no longer listed in the AOP.

Tank 97: Tank 97 service is 38,640-gallon spent sulfuric acid received from the Alkylation Unit and stored under nitrogen blanket. This tank has a tendency to collect a "rag layer" of hydrocarbon on top of the sulfuric acid. The true vapor pressure of this dual phase organic-inorganic liquid is estimated between 4.8 and 7.9 psia; the HAP content is estimated at <4 wt%. NWCAA Sections 560 and 580 apply to tanks storing organic liquids and tanks storing VOCs, respectively. However, the rule is silent on tanks in dual-phase service. Because the hydrocarbon layer is governing the vapor space of the storage tank and has a vapor pressure greater than 1.5 psia, the tank is subject to NWCAA 580.3. Pursuant to NWCAA 580.37, because the tank is subject to NWCAA 580.3, it is exempt from NWCAA Section 560.

The Anacortes Refinery has chosen to comply with NWCAA 580.32 by complying with the equipment specifications and maintenance requirements of 60 Subpart Kb using a closed vent system routed to the refinery flare system. This will be operational 2nd quarter 2024. In addition, because the HAP content is less than 4%, Tank 97 is subject to 63 Subpart CC Group 2 requirements. Because Tank 97 is a Group 2 tank, the associated closed vent system does not have to comply with 40 CFR 63 Subpart SS.

Tank 216: Tank 216 service is as a backup for the other Effluent Plant tanks. The tank was built in 1993 and upgraded in 2008 with a floating roof to protect migratory birds. Because this tank is upstream of the aeration basins where the waste stream exits control, it is subject to the storage tank requirements under 61 Subpart FF (61.343 & 61.351). The Marathon Refinery chooses to comply with the 61 Subpart FF tank requirements by complying with 60 Subpart Kb under 61.351(a)(2).

Also, because this tank is a back up for other CC Group 1 effluent tanks, it is subject to CC Group 1 requirements along with NWCAA Section 560, NWCAA 580.3, and NWCAA 580.9. In addition, because of the date the roof was replaced, Tank 216 is subject to 60 Subpart Kb.

The Diversion Sump, where the waste stream is routed to Tank 216, is also subject to the surface impoundments requirements under 61 Subpart FF (63.344).

Tanks 1406, 1407 & 1408: As constructed under NWCAA OAC 1171 (and discussed above), Tank 1406 is a 10,000 barrel fixed roof tank for the storage of diesel (Diesel Day Tank), Tank 1407 is a 20,000 barrel IFR tank for the storage of gasoline (RUL Day Tank), and Tank 1408 is a 10,000 barrel IFR tank for the storage of ethanol (Ethanol Tank). Tanks 1407 and 1408 are subject to 60 Subpart Kb due to their size and vapor pressure. Tank 1407 is considered a CC Group 1 tank under 40 CFR 63 Subpart CC because gasoline contains HAPs. Tanks 1406 and 1408 are considered CC Group 2 tanks under 40 CFR 63

Subpart CC because diesel has a low vapor pressure and ethanol does not contain more than 4% HAPs.

3.7 Gasoline Dispensing Facilities

The CY 2020 throughput for gasoline at the Anacortes Refinery Gasoline Dispensing Facility (GDF) was 56,322 gallons and the throughput for diesel was 97,440 gallons. Note that a GDF is defined as one that loads gasoline into fuel tank of a motor vehicle, motor vehicle engine, nonroad vehicle, or nonroad engine. The Anacortes Refinery Truck Rack loads gasoline and diesel into transport tanks so is subject to a different suite of requirements.

Because of its low vapor pressure, there are no air quality regulations related to the storage and transfer of diesel at the GDF. However, there are local, state and federal air quality regulations related to gasoline storage and transfer at the GDF. These regulations are listed below along with a summary regarding applicability.

NWCAA Section 580.6 - Gasoline Dispensing Facilities

Because annual gasoline throughput at the GDF is below 120,000 gallons, the facility is not required to control emissions using Stage I (bulk loading) or Stage II (vehicle refueling) control strategies. However, there are two provisions of NWCAA 580.6 that apply to the 4,000 gallon gasoline storage tank at the GDF and are included in the AOP. NWCAA 580.6(D) requires a pressure vacuum vent cap on the tank, and NWCAA 580.6(E) requires that the tank be maintained in a vapor-tight condition and in good working order and specifically refers to caps, adaptors, and drain valves in this regard. MR&R for NWCAA 580.6(E) has been gap-filled in the AOP to conduct quarterly inspections and keep records of those inspections. NWCAA 580.6(D) has been gap-filled to comply with the vapor tight storage tank condition requirements under NWCAA 580.6(E).

Chapter 173-491-040(2) - Gasoline Dispensing Facilities (Stage I)

This rule requires Stage I control (bulk loading) for GDFs located in an ozone attainment area when the facility has an annual gasoline throughput greater than 360,000 gallons and for new GDFs with a total gasoline storage capacity greater than 10,000 gallons. The GDF at the refinery is in an ozone attainment area, However, it does not exceed the annual gasoline throughput or storage capacity thresholds in this rule. Consequently, this regulation is inapplicable and is not included in the AOP.

40 CFR 63 Subpart CCCCCC - National Emission Standards for Hazardous Air Pollutants for Source Category: Gasoline Dispensing Facilities.

In accordance with 63.11111, the regulation only applies to GDFs located at an area source of HAPs. The GDF at the refinery is located at a major source of HAPs. Therefore, the GDF is not subject to the rule and Subpart CCCCCC is not included in the AOP.

4. AIR OPERATING PERMIT ADMINISTRATION

4.1 Federal Enforceability

Federally enforceable requirements are terms and conditions required under the Federal Clean Air Act (FCAA) or under any of its applicable requirements. Federally enforceable requirements are enforceable by the EPA and citizens.

Local and state regulations may become federally enforceable by formal approval and incorporation into the State Implementation Plan (SIP) or through other delegation mechanisms. All applicable requirements in the permit including standard terms and conditions, generally applicable requirements, and specifically applicable requirements are federally enforceable unless identified in the permit as enforceable only by the state.

NWCAA administers the Air Operating Permit (AOP) program through chapter 173-401 WAC. Chapter 173-401 WAC is not federally enforceable although the requirements of this regulation are based on federal requirements for the Air Operating Permit program (40 CFR Part 70). Upon issuance of the permit, the terms based on Chapter 173-401 WAC will become federally enforceable for the source.

Most rules and requirements are followed by a date in parentheses. Two different versions (identified by the date) of the same regulatory citation may apply to the source if federal approval/delegation lags behind changes made to the Washington Administrative Code (WAC) or the NWCAA Regulation. For NWCAA regulations, the date represents the most recent Board of Directors adoption date, which is identified as the "Passed" or "Amended" date in the NWCAA Regulation. The date associated with an OAC or PSD permit represents the date issued for the latest revision of that order. For a federal rule, the date is the rule's most recent publication date.

4.2 Future Requirements

Promulgated applicable requirements with future effective compliance dates may be included as applicable requirements in the permit. The only regulatory program with a future compliance date is the Refinery Sector Risk and Technology Review (RTR) revisions relating to storage tanks. The compliance date is January 30, 2026). This future compliance date is discussed under SOB Section 3.6 and is reflected in the AOP.

Some requirements that are not applicable until triggered by an action, such as the requirement to file an application prior to constructing a new source, are addressed in the standard terms and conditions section of the permit (AOP Section 2).

4.3 Compliance Options

Tesoro did not require emissions trading provisions or specify more than one operating scenario in the operating permit application, so the permit does not address these options. This operating permit does not condense overlapping applicable requirements (streamlining).

4.4 Gap Filling

Title V of the Federal Clean Air Act is the basis for 40 CFR Part 70, which is the basis for the State of Washington Air Operating Permit (AOP) regulation, chapter 173-401 WAC. Title V requires that all air pollution regulations applicable to the source be called out in the Air Operating Permit for that source. Title V also requires that each applicable regulation be accompanied by a federally enforceable means of "reasonably assuring continuous compliance". 40 CFR Part 70 and WAC 173-401-615 each contain a "gap-filling" provision

to address situations where no monitoring is present. 40 CFR Part 70.6(c)(1) and WAC 173-401-630(1) contain authority to address situations where monitoring exists, but is deemed to be insufficient. NWCAA relied upon these authorities to add legally enforceable monitoring requirements where needed to the AOP.

The majority of cases where monitoring did not exist and needed to be added are older regulations, permits, and NWCAA tank requirements. For example, NWCAA used its gap-filling authority to add monitoring for the 20% visible emission standard, NWCAA 451.1. The phrase "Directly enforceable" is included in each AOP term where NWCAA added gap-filling.

There were also some limited cases where monitoring did exist but was found to be insufficient. NWCAA used its sufficiency monitoring authority (WAC 173-401-630(1)) to add monitoring in those cases. "Directly enforceable" is also included in the AOP term when NWCAA used its authority to supplement insufficient monitoring.

The type and frequency of monitoring added under the authorities in WAC 173-401-615 and WAC 173-401-630(1) were set based on the following factors:

1. Historical Compliance of Similar Emission Units –This information helped inform the decision about monitoring frequency and stringency.
2. Margin of Compliance – The margin of compliance is a measure of whether the facility can easily achieve compliance with a requirement, or whether they operate close to an exceedance. NWCAA considered the facility's margin of compliance for each underlying requirements in setting monitoring for that requirement.
3. Variability of Process and Emissions – Processes that vary their production rates and/or emissions over time (e.g., batch loading of grain silos, VOC emissions from lumber drying kilns) require different monitoring from steady-state processes. NWCAA considered process and emission variability in setting monitoring.
4. Environmental Impact of a Problem – Exceedances of some permit requirements have greater environmental consequences than others. For example, a problem that causes an exceedance of a refinery sulfur plant limit could have a greater environmental impact than failing to use ultra-low sulfur diesel at an emergency generator. NWCAA considered the environmental impact of a problem in setting monitoring.
5. Clarity and Complexity – The requirements that apply to AOP facilities are numerous, varied, and can be complex. The greater number, variety, and complexity of requirements, the harder it is for a facility to understand and comply. NWCAA's goal is to write clear, concise permits the facilities can understand. To help achieve this goal, when possible, NWCAA aligned additional monitoring with monitoring that the facility is already performing. This approach required careful thought. NWCAA reviewed the monitoring the facility is already performing to see if it was adequate to stand-in as monitoring for the permit term, and only used it if deemed adequate. For example, an older storage tank may have a NWCAA construction permit that didn't list monitoring. The same tank may also be subject to 40 CFR 60 Subpart Kb. 60 Subpart Kb monitoring would only be used as the gap-filled (or sufficiency monitoring) if we found it was adequate to show compliance with the construction permit.

SOB Table 4-1 lists where in the AOP NWCAA used its gap-filling monitoring authority; SOB Table 4-2 lists where NWCAA used its sufficiency monitoring authority. Gap-filled terms are also discussed in SOB Section 3 for Agency orders.

Table 4-1: Gap-filled Monitoring (WAC 173-401-615(1)(b) & (c))

AOP Terms	Description	Monitoring
4.3 - 4.11	Nuisance (contaminants, odors, PM, fugitives)	Written air contaminant response plan
4.12 - 4.16	Visible emissions – various equipment	Visible emission observation monitoring
4.18	Weight/heat rate standard – sulfur compounds	Maintain records of relevant process information and make it available upon request
4.19 - 4.21	Emissions of sulfur compounds	Monitor & record concentration of stack SO_2, or alternately, fuel gas H_2S
4.22 - 4.23	Sulfur in fuel	Retain fuel specifications & purchase records
4.25	Maintain VOC collection/ reduction equipment	Keep records of actions taken
5.1.10	Disposal of non-condensable VOC	Record activities associated controlling VOC emissions in closed vent systems routed to appropriate control device
5.1.11	Cover contact condenser wells; route vapor to closed system.	Keep records of operation and maintenance activities
5.1.20, 5.3.42	Miscellaneous Process Vent (MPV) destination	Keep records indicating where the MPV is introduced in the boiler.
5.2.21 (CR/NHT) & 5.4.16 (Isom)	Fugitive component operation & maintenance	Comply with general operation and maintenance monitoring, recordkeeping, & reporting
5.3.4	CCU particulate emissions	Comply with CCU scrubber liquid-to-gas monitoring requirements
5.3.5	CCU Diversion Stack particulate emissions	Monitor and keep records of appropriate CCU operating parameters to demonstrate hot standby operation. Comply with CCU FGS bypass monitoring

AOP Terms	Description	Monitoring
5.3.28 (V-397), 5.8.5 (F-753), 5.8.11 (CWT2 & 2a), 5.18.5 (Paint Spray Booth)	Opacity emissions	Comply with refinery-wide opacity monitoring program
5.3.18	Sulfur Curtailment Plan	Report all sulfur curtailment events monthly and steps taken
5.4.3 (F-6602), 5.8.4 (F-753), & 5.9.6 (ENG-811 and ENG-812)	Fired unit fuel type	Keep records of unit design and/or fuel combusted.
5.9.4 (GEN-765) & 5.9.9 (J-750)	GEN-765 fuel composition requirements	Keep a record of the type of fuel and its sulfur content for fuels combusted in the engine.
5.10.6	Truck Rack reasonable operating measures	Operate in a manner consistent with good air pollution control practices for minimizing emissions.
5.10.7	Truck Rack product restriction	Maintain a contemporaneous record the type of material loaded at the Truck Rack.
5.10.8, 5.10.11, & 5.10.13	Truck Rack equipped with vapor control system	Operate a functioning interlock system.
5.10.10	Truck Rack control system operation	Comply with the recordkeeping requirement for maintenance and repair periods
5.10.12	Summer Track Rack operation	Record each event during the months of May through September that the vapor collection system failed and gasoline transfer was not discontinued.
5.10.14 & 5.10.15	Truck Rack vapor-tight fittings	Keep design specifications and written procedures on-site specifying that all product loading and vapor control lines shall be equipped with vapor-tight fittings.
5.10.17, & 5.10.22 - 5.10.25	Truck Rack loading arm design and emission rate	Comply with the CEMS and VaVaCS monitoring and recordkeeping.

AOP Terms	Description	Monitoring
5.15.1 & 5.15.2	PV vent cap on Gasoline Dispensing Facility storage tank	Conduct quarterly inspections and maintain inspection records.
5.16.7	Tank 1406 product storage limitation	Maintain records documenting the type of products stored in Tank 1406.
5.16.10, 5.16.31, 5.16.48, 5.16.60, 5.16.74, 5.16.89	Storage of organic liquid w/ 1.5 psia < TVP < 11.1 psia	Maintain TVP records, inspection frequency, inspection procedures, notice, recordkeeping & reporting requirements.
5.16.13, 5.16.33,	Seal condition	Semiannually visual inspections with repairs. Maintain records of the petroleum liquids stored, the maximum TVP of the liquid as stored, and the results of any inspections performed
5.16.16, 5.16.35, 5.16.51, 5.16.63, 5.16.78, 5.16.92	Roof on liquid surface	Keep records of periods when the floating roof is resting on the leg supports.
5.16.22 – 5.16.30, 5.16.39 - 5.16.44, 5.16.82 – 5.16.87	EFR roof openings	Semiannual visual inspection of the vessel openings and bleeder vents semiannually. Document inspection results and any action taken to close or seal openings Annual visual inspection of the emergency roof drain's fabric covers. If found damaged, fix or replace it Annual visual inspection of rim vents for damage and pressure setting. If found damaged or the pressure setting is wrong, fix or replace it
5.16.45	Tanks 202 & 203 maximum TVP	Maintain records of maximum TVP using the calendar month maximum average local temperature for ambient tanks or the maximum average monthly storage temperature for heated tanks
5.16.47	Tank 1408 product storage limitation	Maintain records of the products stored

AOP Terms	Description	Monitoring
5.16.50, 5.16.62, 5.16.76, 5.16.91	IFR seal condition	Conduct IFR seal inspections, keep inspection and repair records
5.16.56, 5.16.68, 5.16.98	IFR roof openings	Conduct IFR seal inspections, keep inspection and repair records
5.16.73	Tank 1407 product storage limitation	Maintain records of the products stored
6.1	Refinery-wide Visible Emission Monitoring Program	Periodic visible emission inspection of emission units including corrective action and recordkeeping.

Table 4-2: Sufficiency Monitoring (WAC 173-401-630(1))

AOP Terms	Description	Monitoring
2.4.1.3	Compliance certification	Reporting periods identified
2.4.3	Required recordkeeping	Monitoring during shutdown
2.4.7	Reporting of deviations	Defining what “prompt” reporting means
4.1	Required monitoring reports	Reporting periods identified
4.2	Operation & maintenance	Monitor, keep records, & report
4.24	Process turnaround	Include emissions in annual emission inventory
5.2.24, 5.2.25, 5.2.26, 5.2.27, 5.2.31, 5.2.32	Compressors in hydrogen service	Keep records of hydrogen service demonstration
5.3.3	CCU FGS particulate emissions	Comply with CCU scrubber liquid-to-gas monitoring requirements
5.7.12	FGR compressor availability	Monitor and record FGR compressor availability on an 8,760-hour rolling sum basis, rolled hourly and supporting data used in the calculation.

AOP Terms	Description	Monitoring
5.7.24	Limits on Waste Gas to Flare	Monitor and record the flow of waste gas routed through each flare on a 15-minute basis. The record shall include all data used to calculate the waste gas flow and all assumptions used in the calculations.
5.9.1 (GEN-763 and GEN-764)	RICE hours of operation	Keep records of the operation of the engine in emergency and non-emergency service.
5.9.5 (GEN-765), 5.9.7 (ENG-811 and ENG-812), & 5.9.8 (J-750)	RICE rating & operation	Keep a record of engine manufacturer data, manufacturer's emission-related written instructions, and a log of maintenance.
5.16.9	Tank 97 closed vent system to flare	Report start-up of closed vent system. Keep records of pilot flame absence and report semiannually. Keep records of tank dimension and capacity
5.16.14, 5.16.34, 5.16.77	Seal Condition	Keep records for at least 5 years. Repair any defects found
5.16.17	Roof on liquid surface	Keep records of periods when the floating roof is resting on the leg supports.
5.17.5	Individual Drain Systems	Inspections of subject drains, keep records of inspection findings, correct issues found
6.2.1, 6.2.2	Pumps in light liquid service without dual mechanical seals	For those units complying with a lower leak definition, calibrate using a mixture of n-hexane or methane and air at a concentration approximately equal to the leak definition
6.2.10	Pumps and valves in heavy liquid service, pressure relief devices in light liquid or heavy liquid service, and connectors	For those units complying with a lower leak definition, calibrate using a mixture of n-hexane or methane and air at a concentration approximately equal to the leak definition
6.2.13	Valves in gas/vapor service and in light liquid service – skip period monitoring program for valves	For those units complying with a lower leak definition, calibrate using a mixture of n-hexane or methane and air at a concentration approximately equal to the leak definition

4.5 Compliance Assurance Monitoring (CAM)

Compliance Assurance Monitoring (CAM) is a federal program intended to provide a reasonable assurance of compliance with applicable requirements under the Clean Air Act for large emission units that rely on pollution control device equipment to achieve compliance. The CAM rule (40 CFR Part 64) requires owners and operators to conduct monitoring to determine that control measures, once installed or otherwise employed, are properly operated and maintained so that they continue to achieve a level of control that complies with applicable requirements.

The CAM approach establishes monitoring for the purpose of:

- Documenting continued operation of the control measures within ranges of specified indicators of performance that are designed to provide a reasonable assurance of compliance with applicable requirements,
- Indicating any excursions from the performance indicator ranges, and
- Responding to the data so that the cause or causes of the excursions are corrected.

The first step in the CAM process is to determine the applicability of CAM to each pollutant-specific emission unit (PSEU). The determination is made on a pollutant-by-pollutant basis for each emission unit. To be subject to CAM, the PSEU must meet all 5 of the following criteria:

1) Located at a major source required to obtain a 40 CFR Part 70 permit,
2) Subject to an emission limit or standard for the applicable pollutant,
3) Use a control device to achieve compliance,
4) Have potential pre-control emissions of the applicable pollutant that are at least 100% of the 40 CFR Part 70 major source threshold, and
5) Not otherwise exempt.

The Anacortes Refinery is a major source required to obtain a 40 CFR Part 70 permit, so all emission units at the refinery are potentially subject to CAM (Criteria 1).

SOB Table 4-3 provides a summary of the CAM applicability to the refinery process units for those pollutants that have an emission standard. Note that this applicability analysis initially reviews each PSEU for being subject to an emission standard (Criteria 2), whether a control device is used to meet that standard (Criteria 3), and exemption applicability (Criteria 5). Once an emission unit does not meet an applicability criterion, it is eliminated from further CAM criteria review. Any PSEU that remains as potentially subject is further examined to determine if the pre-control emissions exceed or are equivalent to the major source threshold (Criteria 4). The pollutants listed are those that have emission limits as listed in AOP Sections 4 and 5.

Table 4-3: CAM Applicability Review

PSEU	Pollutant - Control Device	Reason(s) for Non-Applicability
Primary Crude Oil Processing (Crude, Vacuum Flasher, and ROSE)		
Heater F-101	NOx - Low NOx Burners	No active control device
	PM/Visible Emissions – Uncontrolled	No active control device
	H2S/SO2 – Uncontrolled*	No active control device*
	CO - Uncontrolled	No active control device
Heater F-102	PM/Visible Emissions – Uncontrolled	No active control device
	H2S/SO2 – Uncontrolled*	No active control device*
Heater F-103	NOx - Uncontrolled	No active control device
	PM/Visible Emissions – Uncontrolled	No active control device
	H2S/SO2 – Uncontrolled*	No active control device*
Heater F-201	NOx – Low NOx Burners	No emission limit
	PM/Visible Emissions – Uncontrolled	No active control device
	H2S/SO2 – Uncontrolled*	No active control device*
Hydroprocessing Area (CGS, CFH, DHT, CR/NHT, SHU, and JFT)		
CR Reactor	HAP (HCl) - Caustic scrubber	Otherwise exempt – 63 Subpart UUU (**4/11/02**)
CGS Reboiler F-104	NOx - Ultra-low NOx burners	No active control device
	PM/Visible Emissions – Uncontrolled	No active control device
	H2S/SO2 – Uncontrolled*	No active control device*
CFH Heater F-652	PM/Visible Emissions – Uncontrolled	No active control device
	H2S/SO2 – Uncontrolled*	No active control device*
DHT Heater F-654	PM/Visible Emissions – Uncontrolled	No active control device
	H2S/SO2 – Uncontrolled*	No active control device*
NHT Heater F-6600 & NHT Reboiler F-6601	PM/Visible Emissions – Uncontrolled	No active control device
	H2S/SO2 – Uncontrolled*	No active control device*
CR Heaters F-6650, 6651, 6652, 6653, 6654, 6655	PM/Visible Emissions – Uncontrolled	No active control device
	H2S/SO2 – Uncontrolled*	No active control device*

PSEU	Pollutant - Control Device	Reason(s) for Non-Applicability
Catalytic Cracking Unit (CCU)		
CCU Regen / CO Boilers (F-302 & F-304) Preheater F-303 (discharges to CCU Regen)	PM (lb/1000 lb coke burnoff) – Flue Gas Scrubber	Otherwise Exempt – 63 Subpart UUU (**4/11/02**)
	PM (gr/dscf OAC) – Flue Gas Scrubber	Otherwise Exempt – 63 Subpart UUU (**4/11/02**)
	PM (gr/dscf BART) – Flue Gas Scrubber	
	PM (gr/dscf NWCAA) – Flue Gas Scrubber	
	PM (gr/dscf WAC) – Flue Gas Scrubber	
	Visible Emissions – Flue Gas Scrubber	***CAM APPLIES***
	SO2 – Flue Gas Scrubber & DeSOx catalyst	Otherwise Exempt - CEMS
	CO – CO Boilers	Otherwise Exempt – 63 Subpart UUU (**4/11/02**)
	NOx – SNCR (F-304)	Otherwise Exempt - CEMS
CCU Regen Diversion Stack	PM/Visible Emissions – Uncontrolled	No active control device
	SO2 – Uncontrolled	No active control device
	CO - Uncontrolled	No active control device
Heater F-301	PM/Visible Emissions – Uncontrolled	No active control device
	H2S/SO2 – Uncontrolled*	No active control device*
Catalyst Hopper V-307	PM/Visible Emissions – baghouse	Pre-controlled emissions estimated at 79.6 tons/year, less than 100% of major source threshold
Catalyst Hopper V-308	PM/Visible Emissions – baghouse	Pre-controlled emissions estimated at 69.9 tons/year, less than 100% of major source threshold
Catalyst Hopper V-353	PM/Visible Emissions – baghouse	Pre-controlled emissions estimated at 84.5 tons/year, less than 100% of major source threshold
Catalyst Hopper V-356	PM/Visible Emissions – baghouse	Pre-controlled emissions estimated at 5.3 tons/year, less than 100% of major source threshold
Catalyst Hopper V-397	PM/Visible Emissions – Cartridge filter	Pre-controlled emissions estimated at 34 tons/year, less than 100% of major source threshold

PSEU	Pollutant - Control Device	Reason(s) for Non-Applicability
Benzene Saturation Unit (BenSat & Isom)		
Reboiler F-6602	PM/Visible Emissions – Uncontrolled	No active control device
	NOx - Low NOx Burners	No active control device
	CO – Uncontrolled	No active control device
	H2S/SO2 – Uncontrolled*	No active control device*
Flare Area		
Flare X-813 & X-814 (Flare Gas Recovery)	PM/Visible Emissions – Uncontrolled	No active control device
	H2S/SO2 – Uncontrolled*	No active control device*
Utilities Plant		
Boiler F-751 & F-752	PM/Visible Emissions – Uncontrolled	No active control device
	H2S/SO2 – Uncontrolled*	No active control device*
Boiler F-753	NOx – Low NOx Burners	No active control device
	PM/Visible Emissions – Uncontrolled	No active control device
	H2S/SO2 – Uncontrolled*	No active control device*
Cooling Water Towers (CWT) 2 & 2a	PM/Visible Emissions – Uncontrolled	No active control device
Reciprocating Internal Combustion Engines		
GEN-763, & GEN-764	PM/Visible Emissions – Uncontrolled	No active control device
	H2S/SO2 – Uncontrolled	No active control device
GEN-765	PM/Visible Emissions – Uncontrolled	No active control device
	H2S/SO2 – Uncontrolled	No active control device
ENG-811 & ENG 812	PM/Visible Emissions – Uncontrolled	No active control device
	H2S/SO2 – Uncontrolled	No active control device
J-750	PM/Visible Emissions – Uncontrolled	No active control device
	H2S/SO2 – Uncontrolled	No active control device
Truck Rack		
Truck Rack (VaVaCS & VRU)	VOC/HAP - Activated Carbon	Otherwise exempt - CEMS
Feedstocks Unloading Facility		
Feedstock Unloading	Benzene - Uncontrolled	No active control device
Storage Vessels & Tank Farm		
Storage Tanks	VOC/HAP – Floating Roofs with Seals	No active control device
	VOC/HAP – Closed Vent to Flare	No emission limit See Flare X-813 & X-814

PSEU	Pollutant - Control Device	Reason(s) for Non-Applicability
Oily Wastewater Collection & Treatment		
Sewer System and Oil-Water Separators	VOC/HAP - Closed Vent System & Carbon Canisters	Otherwise exempt – 60 Subpart QQQ (11/23/88)/ 61 Subpart FF (3/7/90)/ 63 Subpart CC (**8/18/95**)
Diversion Sump	VOC/HAP - Closed Vent System & Carbon Canisters	Otherwise exempt – 61 Subpart FF (3/7/90)/ 63 Subpart CC (**8/18/95**)
Paint Spray Booth		
Paint Spray Booth	PM/Visible Emissions – Panel Filter	Pre-controlled emissions estimated at 14.8 tons/year, less than 100% of major source threshold
General/Facility-Wide		
Process Drains	VOC/HAP – Uncontrolled	No active control device
	VOC/HAP – Closed Vent System & Control	Otherwise exempt – 60 Subpart QQQ (11/23/88)/ 61 Subpart FF (3/7/90)/ 63 Subpart CC (**8/18/95**)
Fugitive Components in gaseous, light liquid, and heavy liquid service	VOC/HAP – Uncontrolled	No emission limit
	VOC/HAP – Closed Vent System & Control	No emission limit Otherwise exempt – 60 Subpart VV (10/18/83)/ 60 Subpart GGG (5/30/84)/ 60 Subpart GGGa (**11/16/07**)/ 61 Subpart J (6/6/84)/ 63 Subpart CC (**8/18/95**)
Compressors	VOC/HAP - Uncontrolled	No emission limit
Heat Exchangers	HAP - Uncontrolled	No emission limit
Miscellaneous Process Vents	VOC/HAP – Uncontrolled	No emission limit
	VOC/HAP – Closed Vent System & Control	No emission limit Otherwise exempt - 63 Subpart CC (**8/18/95**)
Refinery Fuel Gas / Fuel Gas Blend Drum (V-213) / Flare Gas Recovery System / Amine Contactor C-501*	H2S/SO2 – Amine Treatment System*	Otherwise exempt – CEMS*

* Each individual emission unit is evaluated for an additional control device for sulfur control. The refinery-wide sulfur treatment system is evaluated for CAM under the General/Facility-Wide process area.

The following process units do not have explicit individual emission limits so are not listed in SOB Table 4-3: Butane Isomerization Unit, Alkylation Unit, Wharf/Logistics Area, LPG Loading Facility, Crude Rail Offloading Facility, and Gasoline Dispensing Facility. Any equipment component leaks, compressor leaks, miscellaneous process vents, or process

drains associated with these process units are addressed in the General/Facility-Wide section of the table.

An emission limit or standard under Criteria 2 is generally a numerical limit (federal, state, or local), not a work practice standard. For the purposes of Criteria 3 applicability, the control device must be an active device; a passive control device (i.e., one that prevents pollutants from forming like low NOx burners or lids or seals) does not trigger. If the emission unit could meet the emission standard without the use of the control device, it is exempt from CAM (i.e., it does not use the control device to meet the standard).

CAM applicability includes multiple exemptions (Criteria 5). If an emissions unit and associated standard qualifies for an exemption, it is exempt from CAM and further analysis is not required. However, applicability must be considered for each applicable standard.

If the emission limit or standard comes from 40 CFR Part 60 (NSPS), 40 CFR Part 61 (NESHAP), or 40 CFR Part 63 (MACT) that was promulgated after November 15, 1990, it is exempt from CAM. The Anacortes Refinery has units that are subject to 60 Subpart GGGa (promulgated 11/16/07), 63 Subpart CC (promulgated 8/18/95), and 63 Subpart UUU (promulgated 4/11/02) so are exempt from CAM for that particular standard.

Certain emission units for specific pollutants are subject to multiple overlapping NSPS, NESHAP, and MACT which rely on each other for the compliance demonstration to streamline the requirements. It is assumed in this analysis that when a newer post-November 5, 1990 rule utilizes an older rule for the compliance demonstration, the older rule's compliance demonstration is adequate for CAM and qualifies for the exemption.

In addition, several emission units are required to monitor operations with a continuous emission monitoring system (CEMS). These CEMS are also subject to NWCAA Section 367 and NWCAA Appendix A which requires quality assurance for the CEMS. As such, the CEMS is considered a continuous compliance determination method, which exempts it from CAM requirements.

CCU Regen / CO Boilers (F-302, F-303, & F-304) – PM/VE: The CCU Regen with the CO Boilers is subject to several emission limits for particulate matter:

- 40 CFR 63 Subpart UUU: 1.0 lb/1000 lb coke burnoff, 3-hour rolling
- OAC 946c Condition (2): 0.11 gr/dscf @ 7% O2
- BART Order 7838: 0.11 gr/dscf @ 7% O2, 1-hour average
- NWCAA 455.1: 0.20 gr/dscf @ 7% O2
- NWCAA 451.1 (state only): >20% opacity for no more than 3 minutes in 1 hour (Method 9A)
- NWCAA 451.1: >40% opacity for no more than 3 minutes in 1 hour (Method 9A)
- WAC 173-400-040(2): >20% opacity for no more than 3 minutes in 1 hour (Method 9A)

Note that the CCU Regen is also subject to a NWCAA 455.1 PM grain loading limit during hot standby to the Diversion Stack. However, there is no active control device for PM on the Diversion Stack so CAM does not apply.

<u>63 Subpart UUU:</u> Since 63 Subpart UUU was promulgated after November 15, 1990, the CCU and COB F-302 and F-304 are CAM exempt for the lb/1000 lb coke burnoff limit.

<u>Grain loading standards:</u> OAC 946c Condition (2) explicitly states that compliance with the 63 Subpart UUU lb/1000 lb coke burnoff standard serves as compliance with the OAC grain loading standard. As such, this OAC grain loading standard is exempt from CAM via

compliance with 63 Subpart UUU which was promulgated after November 15, 1990. Since the other applicable grain loading standards are either numerically equal or greater than the OAC standard, the compliance demonstration with the OAC grain loading standard is adequate to demonstrate compliance with the other grain loading standards.

Opacity: On October 4, 2023, the Anacortes Refinery conducted a source test that demonstrated that monitoring FGS liquid-to-gas (L/G) ratio under 63 Subpart UUU will also meet the applicable visible emission standards. As such, the CAM Plan monitoring strategy for visible emissions is monitoring L/G ratio.

EPA has approved Alternative Monitoring Plans (AMPs) for other refineries with similar flue gas scrubbers where monitoring of the flue gas scrubber L/G ratio is adequate to also demonstrate compliance with the opacity standards. However, because the Anacortes Refinery is subject to different requirements, the Anacortes Refinery did not need to obtain a similar AMP.

In the AMP for the Ferndale Refinery (Phillips 66 Company), EPA required monitoring of solids content of the scrubber liquid in addition to L/G ratio. This is likely due to concerns of entrainment of the particles in the stack gas and thereby introducing another source of particulate matter.

The Anacortes Refinery samples daily for the solids content in the scrubber liquid to monitor for excessive catalyst carryover. It appears that the solids in the scrubber liquid do not significantly contribute to overall particulate emissions based on a review of source test data and a comparison of calculated versus test emissions. Because of this review and the fact that refinery monitors scrubber liquid solids content for its own purposes, including monitoring of scrubber liquid solids content is not necessary in the CAM Plan for opacity.

CCU Regen / CO Boilers (F-302, F-303, & F-304) – Ammonia: While the FGS stack has an ammonia emission limit due to the SNCR in COB2, ammonia is not considered a criteria or hazardous air pollutant under the federal program (e.g., has no major source threshold under 40 CFR Part 70) so is not subject to CAM.

V-307 & V-308: OAC 947 states that the new baghouses are guaranteed to achieve 0.02 gr/cf and 99.9% control with inlet loading at 5 gr/cf that results in a controlled emission rate of 80 lb/year for both hoppers based on 2344 hours combined operation per year. Scaling up to 8760 hr and dividing emissions between hoppers:

- V-307: 80 lb/yr / 0.001 x 8760 hr/yr / 2344 hr/yr x 1248 hr/yr / 2344 hr/yr x 1 ton/2000 lb = 79.6 tpy
- V-308: 80 lb/yr / 0.001 x 8760 hr/yr / 2344 hr/yr x 1095 hr/yr / 2344 hr/yr x 1 ton/2000 lb = 69.9 tpy

V-353: The background documentation for OAC 633 states that the baghouse was designed for an inlet loading rate of 5 gr/cf and an air transfer rate of 450 scf/min:

- 5 gr/cf * 450 scf/min x 60 min/hr x 1 lb/7000 gr x 8760 hr/yr x 1 ton/2000 lb = 84.5 tpy

V-356: OAC 946c requires that the particulate matter from this hopper shall not exceed 0.02 gr/dscf controlled. OAC 753 states that the filter will meet 99.0% removal efficiency. The blower rating is 4250 cf/hr:

- 0.02 gr/dscf x (1-0.99) x 4250 cf/hr x 1 lb/7000 gr x 8760 hr/yr x 1 ton/2000 lb = 5.3 tpy

V-397: The background documentation for OAC 1309 states that the this multi-loader catalyst adder system (V-397) has an uncontrolled PTE emission rate of 34 tpy.

Flares: Flares can be considered emission sources themselves with emission limits but also control devices for other refinery sources (e.g., miscellaneous process vents). The flare as an emission source does not have any active control equipment to meet the emission standards (e.g., opacity, SO2); therefore, CAM does not apply directly. However, when the flare serves as the control device (e.g., MPVs, equipment leaks), CAM is addressed for the individual controlled unit.

Paint Spray Booth: The Paint Spray Booth is subject to a variety of visible emission and particulate emission standards that it utilizes the panel filter to meet. However, precontrolled potential emissions are estimated to be less than 100% of the major source threshold (i.e., 100 tpy).

Actual paint usage for 2020 was submitted as 2236 gallons over 2080 hr/year. Conservatively assuming 9 lb/gallons solids content, a transfer efficiency of 65%, and scaling up to 8760 hr/yr:

- 2236 gallons/year x 9 lb/gallons x (1-0.65) x 8760 hr / 2080 hr x 1 ton/2000 lb = 14.8 tpy

Refinery Fuel Gas / Amine Treatment System: Fuel gas combustion devices are subject to fuel gas sulfur content requirements to limit SO2 emissions. The amine system at the refinery acts to remove sulfur from the fuel gas which is then burned in the fuel gas combustion devices, therefore CAM applicability is addressed as an individual line item for fuel gas sulfur content in SOB Table 4-3.

4.6 Permit Elements and Basis for Terms and Conditions

The permit is divided into the following sections:

Information Page

Attest

AOP Section 1: Emissions Unit Descriptions

AOP Section 2: Standard Terms and Conditions

AOP Section 3: Standard Terms and Conditions for NSPS and NESHAP

AOP Section 4: Generally Applicable Requirements

AOP Section 5: Specifically Applicable Requirements

AOP Section 6: Common Requirements

AOP Section 7: Monitoring Plans

AOP Section 8: Inapplicable Requirements

Information Page and Attest

The Information Page identifies the facility, the responsible official, and the Agency personnel responsible for permit preparation, review, and issuance. The Attest page provides NWCAA's authorization for the source to operate under the terms and conditions contained in the permit.

AOP Section 1 - Emission Units Descriptions

Significant emission unit descriptions are listed in tables contained in AOP Section 1. The information presented includes the emission units, when they were constructed or modified, their nominal size, fuel type and air pollution control system where applicable. The tables

also provide a condensed list of specifically applicable regulations and orders for each emission unit. AOP Section 1 is for general information only and is not an enforceable section of the permit.

AOP Section 2 - Standard Terms and Conditions

The Standard Terms and Conditions section of the permit specifies administrative requirements or prohibitions with no ongoing compliance monitoring requirements. The legal authority for the Standard Terms and Conditions are provided in the citations in AOP Section 2. The description of the regulation in each of these conditions (with the exception of those labeled "Directly enforceable") is sometimes a paraphrase of the actual regulatory requirement. Where there is a difference between the actual requirement and the paraphrased description, the cited regulatory requirement takes precedence. In an effort to make the section more readable, the terms and conditions have been grouped by function. In some cases, similar requirements at the state and local authority level have been grouped together.

Three permit conditions in AOP Section 2 are labeled "Directly enforceable". These conditions were clarified via gap-filling (either using the gap filling or sufficiency monitoring authority) to better ensure continuous compliance. See SOB Section 4.4 for a further discussion of gap filling.

A number of requirements that would not be applicable until triggered have also been included in this section. An example of one such requirement is the requirement for a source to submit an application for new source review (AOP Term 2.8.1).

AOP Section 3 - Standard Terms and Conditions for New Source Performance Standards and National Emission Standards for Hazardous Air Pollutant Requirements

The Standard Terms and Conditions for New Source Performance Standards (NSPS) and National Emission Standards for Hazardous Air Pollutant Requirements (NESHAP) section of the AOP also specifies administrative requirements or prohibitions with no ongoing compliance monitoring requirements. The conditions in this section, AOP Section 3, are taken from the "General Provisions" of 40 CFR Parts 60, 61, and 63. They apply specifically to the affected sources, affected facilities, or stationary sources subject to the standards of 40 CFR Parts 60, 61, and 63. These affected sources, affected facilities, or stationary sources, identified in AOP Section 5, are linked to the requirements in AOP Section 3 by a note either in the first row of the table of requirements for the unit, or within the description of the regulatory requirement itself.

AOP Section 3 also includes the requirements that are applicable when triggered (e.g., notification of the construction of a new source under NSPS).

AOP Section 4 - Generally Applicable Requirements

The Generally Applicable Requirements section of the AOP identifies requirements that limit emissions or operations and apply broadly to the facility. With some exceptions, each of these requirements applies generally to sources. For example, NWCAA Regulation 455.1 broadly prohibits particulate emissions that exceed 0.1 gr/dscf from any emissions unit, with certain exceptions. Other requirements apply to only certain types of emissions units. For example, WAC 173-400-060 applies only to general process units.

The "Term" column of AOP Section 4 provides permit term numbers used to identify listed elements. The requirements specified in the "Citation" column are applicable plantwide to all emission units at the source, including insignificant emission units. The "Description"

column is a brief description of the applicable requirements for informational purposes only and is not enforceable. Periodic or continuous monitoring requirements (including testing) are specified in the "Monitoring, Recordkeeping & Reporting" column, which identifies monitoring, recordkeeping and reporting (MR&R) obligations the source must perform as required by WAC 173-401-605(1), or the underlying requirement.

Most of the terms in this section stem from the state and local regulations. Many of these applicable requirements do not prescribe periodic testing or instrumental or non-instrumental monitoring sufficient to yield reliable data from the relevant time period that is representative of the source's compliance with the permit. Gap-filling, as discussed in the previous section of this statement of basis, is included for those terms and is noted as "Directly enforceable."

Gap filling under AOP Term 4.1 sets the reporting periods to be based on a calendar year for the refinery, generally due 30 days after the close of the period. There are specific listed reports that must comply with the timeline associated with that report. For example, per 61 Subpart FF, the annual BWON TAB report is due annually 90 days after January 7th. For clarity and simplicity, NWCAA gap-filled the due date for this report in AOP Term 4.1 to be April 7th.

Generally applicable requirements related to nuisance emissions, odors, and fugitive dust have been gap-filling by requiring the refinery to maintain a written air contaminant complaint response plan. The plan requires facility personnel to respond to complaints received from the NWCAA or the public by checking for possible sources of the nuisance emissions and operational problems. If any problems are identified and they cannot be repaired or corrected within four hours, the permittee must take action to minimize emissions until repairs can be made. Notification must be provided to the NWCAA and records must be maintained. Consistent with the original AOP, the general language to "take action to minimize emissions" was retained because the emission units at a refinery are complicated and interconnected. It is inappropriate to categorically require shutting down or bypassing a piece of equipment in response to a nuisance complaint at a refinery. Refinery equipment shutdowns frequently cause significant emissions and unsafe conditions.

Compliance with generally applicable opacity standards is assured via gap-filled monitoring by visual observation in accordance with refinery-wide opacity monitoring program in AOP Term 6.1. See the discussion below of the refinery-wide opacity monitoring program.

Compliance with particulate emission standards is assured via gap-filled monitoring by visual observation under AOP Term 6.1. Although particulate emission rate is only loosely related to opacity, a zero percent opacity action level will likely ensure that emissions are less than the 0.1 grain/dscf emission standard. This approach is taken because proper operation of equipment at the facility presently results in zero opacity. In lieu of determining compliance using visible observation the facility has the option to determine compliance with a stack test using EPA Method 5 that is a direct measurement of particulate emissions.

Compliance with various sulfur standards is assured through gap-filling. With regard to the 1,000 ppm standard for sulfur compounds, the permittee is required to monitor the hydrogen sulfide in refinery fuel gas and calculate sulfur concentration in the flare fuel stream during process upsets. The permittee is also required to retain fuel specifications for refinery-produced fuel and purchase records for fuels purchased outside the refinery to monitor whether the fuels contain sulfur in excess of the amount allowed in NWCAA Regulation 520.

AOP Section 4 also includes requirements from various federal programs that apply facility-wide: 40 CFR 61 Subpart FF (BWON), 40 CFR 63 Subpart CC, 40 CFR 63 Subpart UUU, 40 CFR 63 Subpart ZZZZ, 40 CFR 63 Subpart GGGGG (remediation).

AOP Section 5 - Specifically Applicable Requirements

This section lists applicable requirements that apply uniquely to an emission unit or to specific groups of emission units. The section follows a similar column format to the Generally Applicable Requirements in AOP Section 4: permit term, citation, description, and MR&R.

Similarly to the generally applicable requirements, gap filling is necessary in some cases to fulfill the requirements of WAC 173-401-615(1) and -630(1). In these cases, an equipment-specific monitoring, recordkeeping, and/or reporting requirement was developed based on the characteristics of the facility and emissions unit, the nature of the underlying requirement, the requirements of WAC 173-401-615 and -630(1), and EPA guidance. The MR&R requirements that contain gap-filling language are identified with the words "*Directly enforceable*." The gap-filled requirements for each emission unit are discussed variously in each relevant SOB section.

AOP Section 5 is organized into multiple tables in accordance with the major process unit groupings at the refinery. Each table provides the applicable requirements to equipment in that unit by calling out the affected equipment.

AOP Section 6 - Common Requirements

AOP Section 6 contains common terms that are referred to as MR&R in AOP Sections 4 and 5 to avoid duplication in the AOP. They include:

- AOP Term 6.1: Refinery-wide visible emission monitoring program
- AOP Section 6.2: 40 CFR 60 Subpart VV LDAR program for equipment leaks
- AOP Section 6.3: 40 CFR 60 Subpart VVa LDAR program for equipment leaks
- AOP Section 6.4: 40 CFR 63 Subpart CC for Pressure Relief Devices
- AOP Section 6.5: 40 CFR 60 Subpart QQQ for individual wastewater drains

Refinery-wide Visible Emission Monitoring Program: Generally, if an emission unit does not have explicit MR&R requirements listed in AOP Section 5 for opacity or grain loading, it should be included in the refinery-wide opacity and grain loading monitoring program; hence, the gap-filling of MR&R in AOP Section 5 pointing to compliance with AOP Term 6.1. However, if AOP Section 5 does include an explicit monitoring program for opacity and/or grain loading (e.g., CCU scrubber stack), the refinery shall comply with the requirements listed in AOP Section 5.

Note that the opacity standard applies to all sources, point or fugitive, at the refinery; it is expected that the refinery personnel investigate and reduce emissions to below the any applicable standard at any time excess visible emissions are seen.

AOP Section 7 – Monitoring Plans

AOP Section 7 contains the various Monitoring Plans applicable to the Anacortes Refinery. They include:

- AOP Section 7.1: Alternate Monitoring Plan for Boiler F-753 (dated May 14, 1996)
- AOP Section 7.2: Alternative Monitoring Plan for the Catalytic Reformer
- AOP Section 7.3: Alternative Monitoring Plan for NSPS Subpart NNN
- AOP Section 7.4: Compliance Assurance Monitoring Plan for Opacity/PM at the Catalytic Cracking Unit

Generally, because these Monitoring Plans are complex and it would be difficult to incorporate the requirements into the relevant AOP Terms, AOP Section 5 terms directly reference each Monitoring Plan so, for clarity and ease of implementation, the AMP is included as part of the AOP.

AOP Section 8 - Inapplicable Requirements

Chapter 173-401-640 WAC requires the permitting authority to issue a determination regarding the applicability of requirements with which the source must comply. If a source requests it, the permitting authority may include inapplicable requirements in the permit. Inapplicable requirements for the refinery are listed in AOP Section 8.

4.7 Insignificant Emission Units and Activities

Insignificant emission units and activities listed in WAC Chapter 173-401-530, -532, and –533 are present at the refinery. Because these emissions units normally have low emissions or generate only fugitive emissions, they are considered insignificant by regulation. The Generally Applicable requirements in AOP Section 4 apply to these units, although the monitoring, recordkeeping, and reporting requirements have been determined to not apply. These emissions units and activities are listed in the following table.

Table 9-1: Insignificant Activities

Unit	WAC Citation	Comment
C-701	WAC 173-401-530(4)	Intermittent Hot Drop Out Service
TK-49	WAC 173-401-532(95)	Boiler feed water
TK-50	WAC 173-401-532(4)	Hydraulic Oil
TK-58, TK-70	WAC 173-401-532(4) WAC 173-401-533(2s)	Fresh NaOH and/or H_2SO_4 <99 wt%
TK-63	WAC 173-401-532(4)	Fresh NaOH
TK-64	WAC 173-401-532(4)	Fresh NaOH
TK-65	WAC 173-401-532(96)	Steam condensate
TK-66	WAC 173-401-532(4)	Fresh NaOH
TK-68	WAC 173-401-530(4)	Process chemical
TK-72	WAC 173-401-532(120)	Sump
TK-73	WAC 173-401-532(120)	Sump
TK-76	WAC 173-401-530(4)	
TK-84	WAC 173-401-532(3)	Lube oil
TK-85	WAC 173-401-532(3)	Lube oil
TK-86	WAC 173-401-533(2a)	Antifreeze
TK-101	WAC 173-401-530(4)	Fresh NaOH
TK-102	WAC 173-401-532(94)	Process water
TK-112	WAC 173-401-530(4)	Process water
TK-116	WAC 173-401-532(96)	Steam Condensate
TK-117	WAC 173-401-532(4)	Fresh NaOH
TK-123	WAC 173-401-530(4)	Process chemical
TK-126	WAC 173-401-532(96)	Steam condensate
TK-127	WAC 173-401-532(96)	Steam condensate
TK-128	WAC 173-401-532(3)	Lube oil
TK-144	WAC 173-401-530(4)	Process chemical
TK-146	WAC 173-401-532(3)	Lube oil
TK-168	WAC 173-401-530(4)	
TK-172	WAC 173-401-530(4)	Process chemical
TK-173	WAC 173-401-530(1d)	Not open to the atmosphere
TK-175	WAC 173-401-530(4)	Process chemical

Unit	WAC Citation	Comment
TK-176	WAC 173-401-530(4)	Process chemical
TK-177	WAC 173-401-530(4)	Process chemical
TK-179	WAC 173-401-532(3)	Lube oil
TK-186	WAC 173-401-530(1d)	Not open to the atmosphere
TK-189	WAC 173-401-533(2s)	H_2SO_4 < 99 wt%
TK-190	WAC 173-401-530(4)	
TK-191	WAC 173-401-530(4)	Process chemical
TK-192	WAC 173-401-532(3)	Lube oil
TK-193	WAC 173-401-530(4)	Gasoline
TK-194	WAC 173-401-530(4)	Diesel
TK-195	WAC 173-401-532(96)	Steam condensate
TK-196	WAC 173-401-530(4)	Process chemical
TK-197	WAC 173-401-530(4)	Process chemical
TK-198	WAC 173-401-530(4)	Process chemical
TK-199	WAC 173-401-530(4)	Process chemical
TK-206	WAC 173-401-530(4)	Process chemical
TK-210	WAC 173-401-532(4)	Hydraulic oil
TK-211	WAC 173-401-532(4)	Hydraulic oil
TK-212	WAC 173-401-530(4)	Process chemical
TK-214	WAC 173-401-532(3)	Lube Oil
TK-215	WAC 173-401-532(3)	Lube Oil
TK-218	WAC 173-401-532(95)	Boiler feed water
TK-233	WAC 173-401-532(3)	Lube Oil
TK-234	WAC 173-401-530(4)	Process Chemical
TK-235	WAC 173-401-530(4)	Process Chemical
TK-238	WAC 173-401-532(96)	Steam condensate
TK-405	WAC 173-401-532(3)	Lube oil
TK-406	WAC 173-401-532(3)	Lube oil
TK-6650	WAC 173-401-532(4)	Fresh Sodium Hydroxide
TK-6651	WAC 173-401-532(94)	Clean Process Water
Lime Hoppers	WAC 173-401-532(105)	
Pond Dredging	WAC 173-401-532(116)	
Oily Sludge Processing	WAC 173-401-532(114)	
Nutrient Storage and Handling	WAC 173-401-530(4)	
Anti-Foam Application	WAC 173-401-530(4)	
Weed Control	WAC 173-401-532(34)	
Tilling	WAC 173-401-532(34)	
Soil Amendments	WAC 173-401-532(34)	
Use and Storage of Portable Drums and Totes	WAC 173-401-532(42)	Process chemical
Temporary Storage of Lean MDEA	WAC 173-401-530(4)	Process chemical
Storage and Use of Soap	WAC 173-401-532(4)	
Alkylation Neutralization Pit	WAC 173-401-532(120)	
Acetylene Cylinders	WAC 173-401-530(1d)	
Warehouse Cylinder Storage	WAC 173-401-530(1d)	
Lab Specialty Gases	WAC 173-401-530(1d)	
Welding	WAC 173-401-533(i)	Less than 1 ton/day of welding rod
Metal Working	WAC 173-401-533(w)	Rolling, forging, drawing, stamping, shearing, or spinning hot or cold metals

Unit	WAC Citation	Comment
Abrasive Blasting	WAC 173-401-530(4)	
Cyclone Outside Carpenters Shop	WAC 173-401-530(4)	
Auto Shop	WAC 173-401-530(45)	General vehicle maintenance
Fire Station	WAC 173-401-530(45)	General vehicle maintenance
Ammonia Cylinders	WAC 173-401-530(1d)	
Hydrogen Chloride Cylinders	WAC 173-401-530(1d)	
Chlorine Cylinders	WAC 173-401-530(1d)	
N2/H2 Trailers	WAC 173-401-530(4)	
Merox Reactor Charcoal Changeouts	WAC 173-401-530(40	
Laboratory octane-testing engines	WAC 173-401-533(f)	
Portable Engine Driven Equipment	WAC 173-401-530(4)	Off-road engines
Parking Lots	WAC 173-401-532(54)	
Road Paving and Dike Maintenance	WAC 173-401-532(33)	
Camping Areas on Beach	WAC 173-401-532(11)	
Agricultural Activities	WAC 173-401-532(34)	
TERA Campground, Building, Recreation Area	WAC 173-401-532(11)	
Excavation and Road Maintenance	WAC 173-401-530(1)(d)	Fugitive emissions only
Lawns and Landscaping	WAC 173-401-532(43)	
Paved Roads	WAC 173-401-530(1d)	Fugitive emissions
Unpaved Roads	WAC 173-401-530(1d)	Fugitive emissions
Recreational Fires	WAC 173-401-532(1)	Barbecues and campfires
Painting	WAC 173-401-532(33)	
Refinery Lab, Health Services HVAC	WAC 173-401-532(46)	Comfort air conditioning
Boiler Plant Control House and Lab HVAC	WAC 173-401-532(46)	Comfort air conditioning
Wharf, Loading Rack, and Blender Control Houses and Labs HVAC	WAC 173-401-532(46)	Comfort air conditioning
Alkylation/Butane Isomerization Control House HVAC	WAC 173-401-532(46)	Comfort air conditioning
CCU Control House and Lab HVAC	WAC 173-401-532(46)	Comfort air conditioning
CR/NHT Control House and Lab HVAC	WAC 173-401-532(46)	Comfort air conditioning
Crude Unit Control House and Lab HVAC	WAC 173-401-532(46)	Comfort air conditioning
Other trailer and operator shelter HVACs	WAC 173-401-532(46)	Comfort air conditioning
Refinery Lab	WAC 173-401-533(3c)	Per NWCAA agreement
Health Services	WAC 173-401-532(53)	
Effluent Lab	WAC 173-401-533(3c)	Per NWCAA agreement
Boiler Plant Lab	WAC 173-401-533(3c)	Per NWCAA agreement
Blending Lab	WAC 173-401-533(3c)	Per NWCAA agreement
Alkylation/Butane Isomerization Lab	WAC 173-401-533(3c)	Per NWCAA agreement

Unit	WAC Citation	Comment
CCU Control House Lab	WAC 173-401-533(3c)	Per NWCAA agreement
CR/NHT Lab	WAC 173-401-533(3c)	Per NWCAA agreement
Crude Control House Lab	WAC 173-401-533(3c)	Per NWCAA agreement
O_2, N_2, CO_2, Inert Gases	WAC 173-401-532(5)	
Analyzer Vents	WAC 173-401-532(8)	
Use and Storage of Compressed Non-Inert Gases in Portable Cylinders	WAC 173-401-530(1d)	Fugitive Emissions, only
7,500-gallon fixed roof tank at the Truck Rack storing lubricity additive	WAC 173-401-532(4)	Diesel fuel additive

4.8 Public Docket

Copies of the Anacortes Refinery AOP, permit application, and related technical support documents are available online at nwcleanairwa.gov or at the Agency office located at;

Northwest Clean Air Agency
1600 South Second Street
Mount Vernon, WA 98273-5202

4.9 Definitions and Acronyms

Definitions are assumed to be those found in the underlying regulation. A short list of definitions has been included to cover those not previously defined.

An "applicable requirement" is a provision, standard, condition, or requirement in any of the listed regulations or statutes as it applies to an emission unit or facility at a stationary source.

“Ecology” means the Washington State Department of Ecology.

An "emission unit" is any part or activity of a stationary source that emits or has the potential to emit any regulated air pollutant.

“Tesoro” means Tesoro Refining and Marketing Company LLC.

A “permit” means for the purposes of the Air Operating Permit program an air operating permit issued pursuant to Title V of the 1990 Federal Clean Air Act.

“State” means for the purposes of the Air Operating Permit program the NWCAA or the Washington State Department of Ecology (Ecology).

The following is a list of acronyms used in the Air Operating Permit and/or Statement of Basis:

Alky Alkylation (unit)

AOP Air Operating Permit

ASHRAE American Society of Heating, Refrigerating, and Air-Conditioning Engineers

ASTM American Society for Testing and Materials

BACT Best Available Control Technology

BART Best Available Retrofit Technology

BenSat Benzene Saturation (unit)

BWON	benzene waste organic NESHAP (40 CFR 61 Subpart FF)
BI	Butane Isomerization (unit)
Btu	British thermal unit
BWON	Benzene Waste Organic NESHAP (40 CFR 61 Subpart FF)
CCU	Catalytic Cracking Unit
CGS	Catalytically Cracked Gas Splitter (unit)
CR	Catalytic Reformer (unit)
CFH	Clean Fuels Hydrotreater (unit)
CAM	Compliance Assurance Monitoring (40 CFR Part 64)
CEMS	continuous emission monitoring system
CFR	Code of Federal Regulations
CO	carbon monoxide
COXX	Compliance Order number XX
CPMS	Continuous Parametric Monitoring System
DHT	Distillate Hydrotreater (unit)
EPA	The United States Environmental Protection Agency
FCAA	Federal Clean Air Act
FGS	Flue gas scrubber (on CCU stack)
GRU	Gas Recovery Unit
HAP	hazardous air pollutant (as defined in FCAA)
HHV	higher heating value
HRSG	heat recovery steam generator
HVLP	High-volume, low-pressure
JFT	Jet Fuel Treater (unit)
MACT	maximum achievable control technology
LEL	lower explosive limit
MMBtu	Million British Thermal Units
MR&R	monitoring, recordkeeping and reporting requirements
NAAQS	National Ambient Air Quality Standards
NHT	Naphtha Hydrotreater (unit)
NESHAP	National Emission Standards for Hazardous Air Pollutants
NHV	net heating value (Btu)
NOC	Notice of Construction
NOV	Notice of Violation
NOx	oxides of nitrogen

NSPS	New Source Performance Standard
NSR	New Source Review
NWCAA	Northwest Clean Air Agency
OAC	Order of Approval to Construct
O_2	oxygen
OMMP	operation, maintenance and monitoring plan
OOS	out of service
PM	particulate matter
PM_{10}	particulate matter less than 10 microns in diameter
$PM_{2.5}$	particulate matter less than 2.5 microns in diameter
ppmvd	parts per million by volume, dry basis
psi	pounds per square inch
PTE	potential to emit
PSD	Prevention of Significant Deterioration (major NSR)
psia	pounds per square inch absolute
QA/QC	quality assurance/quality control
RACT	reasonably available control technology
RO	regulatory order
ROSE	Residuum Oil Supercritical Extraction (unit)
RCW	Revised Code of Washington
RICE	Reciprocating Internal Combustion Engine
RTR	Refinery Sector Risk and Technology Review
Scf	standard cubic feet
SCR	selective catalytic reduction
SHU	Selective Hydrogenation Unit
SIP	state implementation plan
SO_2	sulfur dioxide
SOB	Statement of Basis
SOCMI	Synthetic Organic Chemical Manufacturing Industry
SRU	Sulfur Recovery Unit
STP	standard temperature and pressure (0° C and 14.7 psia)
SWS	sour water stripper
TAP	toxic air pollutant (as defined in WAC 173-460)
VaVaCS	vacuum vapor collection system (Truck Rack)
TS	Total Sulfur

TRS	total reduced sulfur
VRU	Vapor Recovery Unit (at Truck Rack)
TVP	true vapor pressure
VF	Vacuum Flasher (unit)
VOC	volatile organic compounds
VP	vapor pressure
WAC	Washington Administration Code
WGS	Wet Gas Scrubber
WWTP	wastewater treatment plant