Statement of Basis for the Air Operating Permit—Final

Sierra Pacific Industries

Mount Vernon, Washington

April 15, 2016

northwest Clean Air agency

Serving Island, Skagit & Whatcom Counties

PERMIT INFORMATION

SIERRA PACIFIC INDUSTRIES

14353 McFarland Road, Mount Vernon, WA 98273

SIC: 2421
NAICS 321113, 321999, & 221119
EPA AFS: 53-057-00057

NWCAA ID: 915-V-S
UBI: 601-766-172

Responsible Corporate Official

Curt Adcock
Division Manager
Sierra Pacific Industries
Burlington Division
14353 McFarland Road
Mount Vernon, WA 98273
(360) 424-7619

Corporate Inspection Contact

Tony Jaegle
Director of Environmental Affairs
Sierra Pacific Industries
19794 Riverside Avenue
PO Box 496028
Redding, CA 96049-6028
(530) 378-8179

Owner (Representative of General Partners)

Red Emmerson, CEO
Sierra Pacific Industries
PO Box 496028
Redding, CA 96049

Northwest Clean Air Agency

1600 South Second Street
Mount Vernon, Washington 98273-5202
(360) 428-1617

Prepared by

Christos Christoforou, P.E.
Engineer
(360) 419-6839

Air Operating Permit Number:	**Issuance Date:**
019R1	April 15, 2016
Permit Modifications	**Modification Date:**
Supersedes Permit Number:	**Expiration Date:**
019	April 15, 2021
Application Received Date:	**Renewal Application Due:**
June 2, 2014	April 15, 2020

TABLE OF CONTENTS

1. INTRODUCTION 5
1.1 Permit changes in the first renewal 5
2. FACILITY DESCRIPTION AND EMISSION UNITS 7
2.1 Location 7
2.2 Operating Schedule 8
2.3 Process Description 8
3. COMPLIANCE HISTORY 19
3.1 Resolved Enforcement Actions 20
4. FACILITY EMISSIONS 25
4.1 Actual Emissions 25
5. FEDERAL REQUIREMENTS 27
5.1 New Source Performance Standards 27
5.2 National Emissions Standards for Hazardous Air Pollutants (NESHAP) ... 28
5.3 PSD and Major New Source Review 29
5.4 Title IV Acid Rain Provisions 29
5.5 Compliance Assurance Monitoring 30
5.6 Other Federal New Source Review Programs 34
6. PSD AND OAC PERMITS 35
6.1 Obsolete Orders 35
6.2 Effective Orders and Permits 37
7. COMPLETED REQUIREMENTS 39
7.1 40 CFR 60 Subpart Db, §60.40b (6/13/07, unless otherwise noted) 39
7.2 40 CFR 63 Subpart DDDD, §63.2252 (2/16/06) 39
7.3 PSD 05-04 Amendment 1 39
7.4 OAC 1089 43
8. GENERAL PERMIT ADMINISTRATION AND ASSUMPTIONS 44
8.1 Permit Content 44
8.2 Federal Enforceability 44
8.3 Future Requirements 44
8.4 Compliance Options 44
8.5 Gap Filling 45
8.6 Inapplicable Requirements 45
9. PERMIT ELEMENTS AND BASIS FOR TERMS AND CONDITIONS ... 46
9.1 Permit Organization 46
9.2 Section 1 – Permit Information, Attest, and Emissions Unit Description Sections 46
9.3 Section 2 – Standard Terms and Conditions 46
9.4 Section 3 – Standard Terms and Conditions for NSPS and NESHAP 47
9.5 Section 4 – Generally Applicable Requirements 47

9.6 Section 5 – Specific Requirements for Emissions Units 49
10. CAM PLANS - ESP 51
11. CAM PLANS – BAGHOUSE 56
12. INSIGNIFICANT EMISSIONS UNITS 60
13. DEFINITIONS AND ACRONYMS 61
14. PUBLIC DOCKET 63

Figures

Figure 2-1 SPI Location 7
Figure 2-2 SPI Facility Layout 8
Figure 2-3 General Process Flow Diagram 9
Figure 2-4 Log Storage and Crane 9
Figure 2-5 Sawline equipment 10
Figure 2-6 Lumber Sorting Line 11
Figure 2-7 Enclosed Planer Operation 12
Figure 2-8 Sawdust baghouse and conveyors 12
Figure 2-9 Dry Kiln at Cycle End 13
Figure 2-10 Dry Kilns Ready to be Loaded 13
Figure 2-11 Kiln Internal Equipment 14
Figure 2-12 Fuel House 15
Figure 2-13 Cogeneration Plant Flow Diagram 16
Figure 2-14 Boiler House and ESP 17

Tables

Table 3-1 Sierra Pacific NOV 20
Table 4-1 Potential to Emit - Criteria Pollutants 25
Table 4-3 Actual Criteria Air Pollutant Emissions 25
Table 4-4 Actual Toxic Air Pollutant Emissions 26
Table 12-1 Insignificant Activities and Emissions Units (Categorically Exempt) 60

1 INTRODUCTION

Sierra Pacific Industries (SPI) owns and operates a dimensional lumber manufacturing facility in Skagit County, Washington. This facility is referred to as "SPI" or "the facility," in this document.

The SPI facility is a designated major source subject to the air operating permit program because it has the potential to emit more than 100 tons per year of nitrogen oxides (NO_X), carbon monoxide (CO), volatile organic compounds (VOC), and particulate matter less than 2.5 microns in size ($PM_{2.5}$), and more than 10 tons per year of hydrogen chloride (HCl) and 25 tons per year of total HAP emissions. These air pollutants are defined as regulated air pollutants in Chapter 173-401 of the Washington Administrative Code (WAC).

The purpose of this Statement of Basis is to set forth the legal and factual basis for the Sierra Pacific Industries Air Operating Permit (AOP) conditions and to provide background information to facilitate review of the permit by interested parties. This Statement of Basis is not a legally enforceable document.

1.1 Permit changes in the first renewal

The Northwest Clean Air Agency (NWCAA) received an application for the first renewal of the SPI AOP on June 2, 2014. Changes specific to each permit section are listed below.

1.1.1 General Information and Attest

The corporate inspection contact information was updated.

1.1.2 AOP Section 1 Emission Unit Identification

Section 1 was updated to include the natural gas fired package boiler as emission unit 6 (EU-6).

1.1.3 AOP Section 2 Standard Terms and Conditions

Section 2 was updated with current citation dates and NWCAA standard language, which includes new and modified applicable regulations such as state greenhouse gas reporting requirements.

1.1.4 AOP Section 3 Standard Terms and Conditions for NSPS and NESHAP

Section 3 was updated with current NWCAA standard language consistent with the National Emission Standards for Hazardous Air Pollutants (NESHAP) and New Source Performance Standards that apply to the SPI operations. New and modified applicable regulations and updated citation dates are included.

1.1.5 AOP Section 4 and 5 Generally and Specifically Applicable Requirements

The Generally Applicable Requirements of Section 4 were reviewed and updated. Section 4 primarily lists NWCAA and Washington Administrative Code (WAC) regulations, which often lack specific methods for compliance determination and require that additional monitoring, recordkeeping and recording provisions be added to the AOP for the purpose of compliance determination. This aspect of Air Operating Permits, known as gap-filling, is discussed further in Section 8 of this document. Gap-filled requirements in the AOP Section 4 were modified for this renewal to be consistent with NWCAA's new format for this section.

Section 5 has been extensively modified, as follows:

- Conditions from OAC 1089a, issued on 11/14/2014, pertaining to the natural gas-fired package boiler have been added.
- Conditions from OAC 938c, issued on 5/8/2013, replaced those of OAC 938b.
- Conditions from PSD 05-04 Amendment 2, issued on 10/23/2013, replaced those of

PSD 05-04 Amendment 1.

- Provisions of 40 CFR 63 Subpart DDDDD (also known as the boiler MACT) have been added in the permit.

2 FACILITY DESCRIPTION AND EMISSION UNITS

The SPI facility is capable of producing approximately 400 million board feet (MMbf)[1] of kiln-dried dimensional lumber per year. A wood-fired boiler/cogeneration unit produces steam for heating on-site lumber drying kilns and for powering a steam turbine capable of generating up to 28 Megawatts (MW) of electricity. Electricity generated is used on-site to power the saw mill and excess electricity is sold to the Puget Sound Energy distribution system. The facility was constructed beginning in late 2005 with initial startup in December 2006.

Section 1 of the AOP includes a summary of emission units and descriptions of applicability. Generally, plant-wide emission requirements are included in Sections 2 and 4 of the AOP while requirements for units that have specific permitting or regulatory requirements are delineated in Section 5 of the AOP. Section 3 brings forward general portions of federal regulations applicable to the site.

2.1 Location

The SPI lumber mill and cogeneration plant is located in Skagit County, at 14353 McFarland Road near Mount Vernon, Washington 98273. Figure 2-1 shows the location of the facility. Figure 2-2 is a drawing of the general layout of the process area of the facility.

Figure 2-1 SPI Location

[1] A **board-foot** is a specialized unit of volume for measuring lumber; it is the volume of a one foot length of a board one foot wide and one inch thick. One board-foot equals 1 ft × 1 ft × 1 in or 0.002360 m^3. Board-feet are used for rough lumber (before drying and planing) with no adjustments. For planed lumber, board-feet refer to the nominal thickness and width of lumber, calculated in principle on its size before drying and planing. Actual length is used.

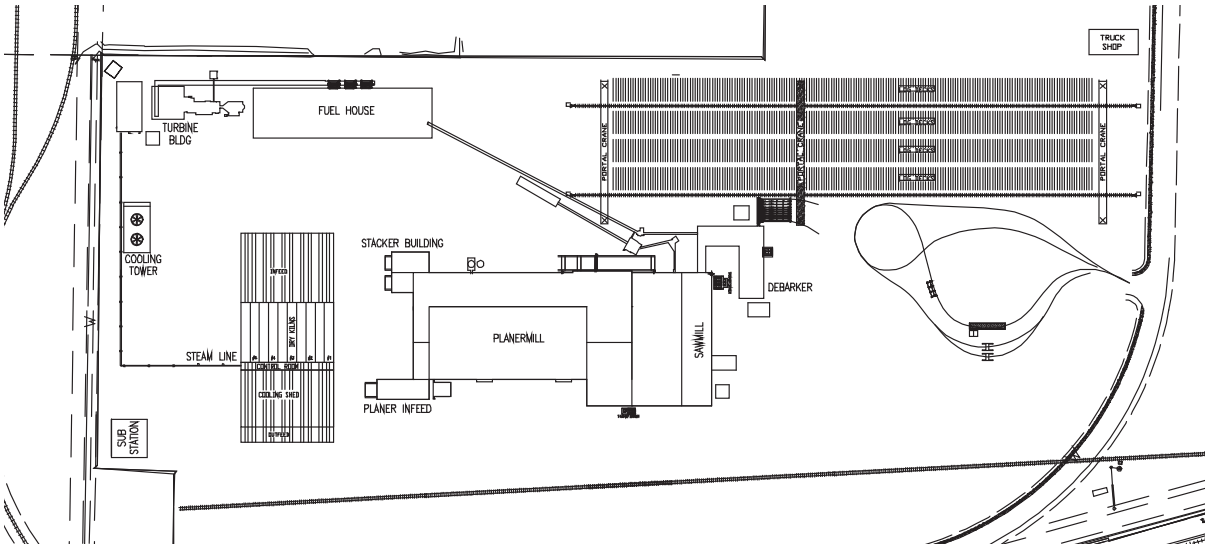

Figure 2-2 SPI Facility Layout

2.2 Operating Schedule

At the time of the permit renewal, SPI operates 2 10-hour shifts (Monday through Friday) in the saw mill. Maintenance on the milling equipment is done as needed between shifts and on weekends.

The cogeneration plant operates 24 hours per day with a scheduled minor maintenance shutdown every 6 months. The facility underwent the first major overhaul on the cogeneration plant in May 2009 after approximately 2.5 years of operation. These major overhauls are scheduled every 7-9 years of operation. The last major overhaul shutdown took place in October of 2014.

2.3 Process Description

Figure 2-3 presents the general process flow diagram of operations at the facility.

Logs are delivered to the site by truck arriving through the northern facility gate. The facility processes Western hemlock and Douglas fir. Other species of logs received at the facility are generally set aside to be sold or sent to a different facility. A majority of the log trucks are offloaded by an electric-powered portal crane that stacks the logs in organized log decks. The balance are offloaded by log loaders (Caterpillar 988 or similar), which put the logs within reach of the portal crane. The logs are stacked in the log deck by the portal crane as shown in Figure 2-4.

The portal crane selects logs for feed to the saw mill through the debarker machine.

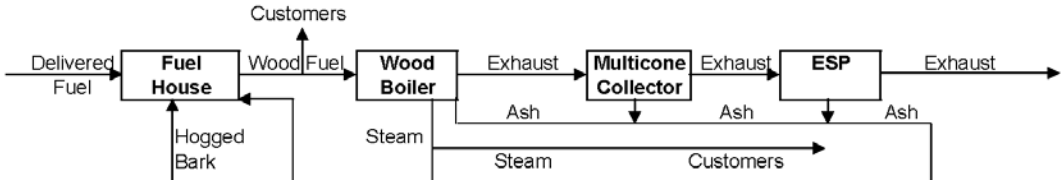

Figure 2-3 General Process Flow Diagram

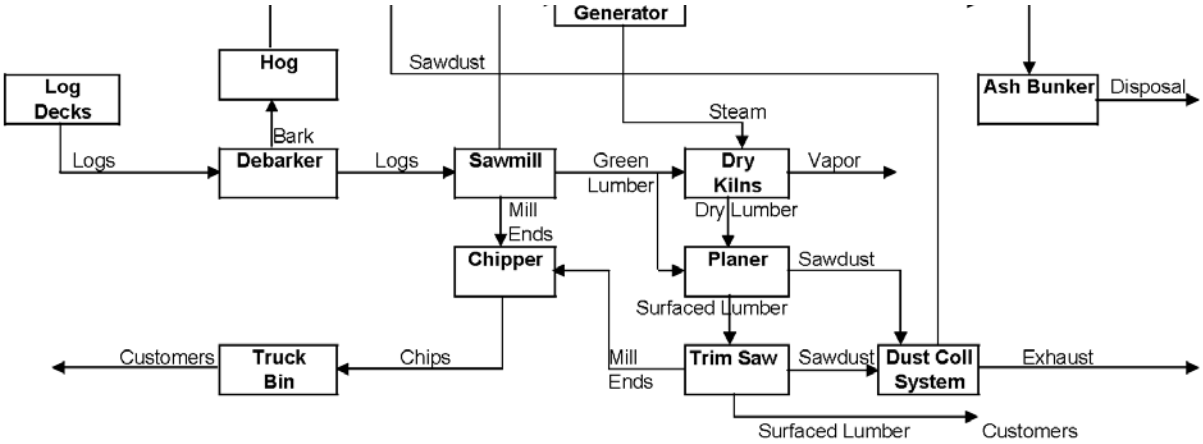

Figure 2-4 Log Storage and Crane

The debarker removes the bark from the log. The log is sent to the saw mill, while the bark is conveyed to a large wood chipper known as a "hog."

The hog reduces and homogenizes the size of the individual pieces of bark and normally sends it to the cogeneration facility fuel house. SPI segregates bark from logs that have been transported over salt water to be shipped off site for landscaping, keeping it out of the fuel for the boiler.

2.3.1 Saw Mill and Planer Operation

Debarked logs are cut to appropriate lengths and sawed into lumber in the saw mill.

Figure 2-5 Sawline equipment

Log pieces that are too small to be sawed into lumber are sent to a chipper and the resulting chips are carried by covered conveyor to a chip bin. Trucks periodically remove chips and carry them to off-site customers.

Saw dust from the mill is collected under the saw deck and transferred to the fuel house by covered conveyor.

Un-dried, or “green,” lumber from the saw mill may be graded, stacked, and moved by forklift to a train or truck to be removed from the facility as green product. Green lumber may also be stacked with spacers and sent to the kilns to be dried. Lumber sorting is shown in Figure 2-6.

Lumber dried in the kilns is allowed to cool in a covered area adjacent to the kilns called the cooling shed. The cool dry lumber is moved by forklift from the cooling shed to the planer mill, where the lumber is planed, graded, stacked, wrapped for shipment offsite. Product is shipped offsite primarily by rail car, but trucks may also be used.

Figure 2-6 Lumber Sorting Line

The planer, shown in Figure 2-7, processes kiln-dried lumber which generates fine, light dust. SPI uses a high efficiency cyclone to collect dust directly from the interior of the planer mill by vacuum which then places the dust onto the fuel house conveyors. Dust pick-up points are located at the planer and the trimmer saw. A baghouse is installed on the cyclone exhaust to control particulate matter emissions. The planer mill baghouse is identified as emission unit (EU)-3.

Most of the 48,440 acfm[2] operating capacity of this system is devoted to the planer, but approximately 10,000 acfm is dedicated to the trimmer saw. The baghouse exhaust has a permit limit of 0.005 grain per standard cubic foot (gr/scf)[3] of air exhausted. At the design capacity of the baghouse (50,440 acfm at 70 ºF, equivalent to 50,250 scfm at 68 ºF) and 0.005 gr/scf, the dust collection system has the potential to emit 9.4 TPY of PM_{10}. The potential annual emission rate for the dust collection system is based on continuous operation (24 hours per day, 8,760 hours per year). However, since startup, SPI has operated the mill in shifts on a non-continuous basis that results in fewer hours of operation and lower annual emissions

Note that the baghouse exhaust stack was initially constructed, and is currently configured to discharge vertically downward as shown in Figure 2-8.

[2] acfm = actual cubic feet per minute (ambient conditions)

[3] Standard conditions are 20 °C (68 °F) and 1.00 atmosphere (29.92 inches of mercury).

Figure 2-7 Enclosed Planer Operation

Figure 2-8 Sawdust baghouse and conveyors

2.3.2 Dry Kilns

SPI operates six double-track dry kilns to treat lumber produced by the saw mill (up to 400 MMbf/yr)[4]. The kilns are identified as EU-4. One of the kilns is shown in Figure 2-9 with a closer view in Figure 2-10. The kilns may run on a continuous basis throughout the year, if necessary, to meet production needs. The amount, dimension, and type of wood that is kiln-dried changes throughout the year based on market demand.

Wood is stacked with spacers to allow air and heat to penetrate the stack more uniformly. Steam is circulated in the kiln wall piping while fans and plenums in the roof structure circulate air in the chamber. The steam demand, fan, and plenum systems are controlled by a computer system with kiln temperature readings as feedback.

Figure 2-9 Dry Kiln at Cycle End

Figure 2-10 Dry Kilns Ready to be Loaded

Figure 2-11 shows two views of the kilns. On the left, stacked lumber inside the kiln is shown, with a view up to the steam tubes surrounding the kiln. On the right is a view the upper portion of a kiln, where fans are used to circulate air inside the kilns when it is in operation.

[4] MMbf = million board feet

Figure 2-11 Kiln Internal Equipment

Wood passing through the kilns is either western hemlock or Douglas fir. During the drying process, wood releases volatile organic compounds (VOC) which pass to the atmosphere through the kiln vents. Some of these compounds (semivolatile chemicals) can condense to form particulate matter, and others have been listed by the EPA as hazardous air pollutants (HAP). Western hemlock and Douglas fir release methanol and formaldehyde as the largest portion of drying emissions.

Emission factors for kiln operation were reviewed closely during initial NWCAA permitting and the following permit amendments. Emission factors accepted by NWCAA were generally considered the most conservative or most specific to the facility and were from the Oregon Department of Environmental Quality (ODEQ) and Oregon State University (OSU) studies.

Kiln emission factors are developed in laboratory bench-scale studies. To date, no *in situ* testing on kilns has been widely accepted. The reason is that the kilns vent through many small roof vents and have variable air flow, and variable air flow directions, over the drying cycle. Common testing techniques require a stack to measure the flow rate along with the pollutant concentrations exiting an emissions unit, which is not possible on the traditional kiln vents. In the laboratory, green wood samples of a measured board-foot amount from mills are placed into a drying oven that operates at specific temperature profiles mimicking the operation of a full-scale kiln but with air flow rates that are known. The concentrations of the air pollutants are measured in the air stream to develop a mass of pollutant per board-foot of lumber. That factor is then used to estimate emissions from full-scale kiln.

SPI provided additional emission factors produced by Dr. Mike Milota of OSU, in which emission testing results from drying of Douglas fir averaged 0.023 lb/Mbf (thousand board feet) for methanol, and 0.0010 lb/Mbf for formaldehyde. A 2004 hemlock drying study conducted by OSU for SPI consisted of three runs with drying temperatures up to 200°F. The average of the three runs provided methanol and formaldehyde emission factors of 0.091 and 0.0013 lb/Mbf, respectively. NWCAA accepted these emission factors as the basis for those TAP/HAP emissions. NWCAA accepted the use of ODEQ/OSU Method 7 emission factors for PM_{10} that include both condensable and filterable portions: 0.04 lb/Mbf hemlock and 0.02 lb/bf Douglas fir.

Emissions from the kilns are controlled by species throughput limitations and maintaining kiln temperatures below 200°F. No control equipment is installed on the kiln vents.

These emission factors have been amended in PSD 05-04, Amendment 2. See Section 6 of this document for more discussion.

2.3.3 Anti-mold Spray System

Lumber may be treated with anti-stain/anti-mold and brightener chemicals. The spray chamber is a continuous spray box that lumber (dried as well as green) is fed through. The lumber is treated with two water-borne coatings, one that protects against sapstain, mold, mildew, decay, and bacteria during storage and transit, and another that brightens the lumber to improve its appearance. The spray chamber is located near the planer mill.

The spray chamber exhausts to the atmosphere at a maximum flow rate of 1,000 acfm. The exhaust passes through a mist eliminator, and the condensed fluid from the mist eliminator is recycled back into the spray system. No additional control equipment is installed on the spray chamber exhaust. The spray chamber is identified as EU-5.

The potential VOC emissions from the spray chamber are estimated to be approximately 9 tons per year in the permit application assuming all VOC in the chemicals is emitted. The spray chamber emissions are addressed by a NWCAA minor new source review permit.

2.3.4 Cogeneration Plant

Steam for the kilns is generated by the boiler in the cogeneration facility. The cogeneration plant consists of a wood-fired, water-wall boiler, a steam turbine, and a generator. The boiler burns wood residuals (bark, sawdust, and chipped material) generated in the saw mill and planer to produce high-pressure steam for the steam turbine. In the event of saw mill shutdown, the facility also accepts wood residuals from offsite to fuel the boiler. The material is delivered by truck, dumped in the area in front of the fuel house, and mixed into the sawdust in the fuel house by front loader. A NWCAA permit requires inspection and rejection of fuel containing anything other than biomass.

Fuel is received in a three-sided fuel house, as shown in Figure 2-12, either from overhead conveyors from the saw mill or from trucks unloaded in front of the fuel house. Fuel is stacked for storage in the fuel house and pushed into the chain feeder area by front loader. Fuel is fed to boiler by a drag chain onto enclosed conveyors; as a result, fugitive dust emissions are calculated up to the drag chain. The boiler burns approximately 380,000 tons of wood residuals annually, all of which are received through the fuel house.

Figure 2-12 Fuel House

The McBurney vibrating grate spreader-stoker type boiler has a design heat input of 430 million British thermal units per hour (MMBtu/hr) and a design steam generation rate of 250,000 pounds per hour (lb/hr). The boiler is equipped with two natural gas burners, each rated at 62.5 MMBtu per hour, for start up and flame stabilization. The boiler incorporates a selective non-catalytic reduction (SNCR) system to reduce oxides of nitrogen (NO_X) emissions using urea injection. Boiler exhaust is treated through a multiclone followed by an electrostatic precipitator (ESP) to control particulate matter emissions. Ash collected from the multiclone and ESP is shipped offsite to be used as a soil amendment. The ash loading system is enclosed to prevent fugitive emissions. The process flow in the cogeneration plant is shown in Figure 2-13.

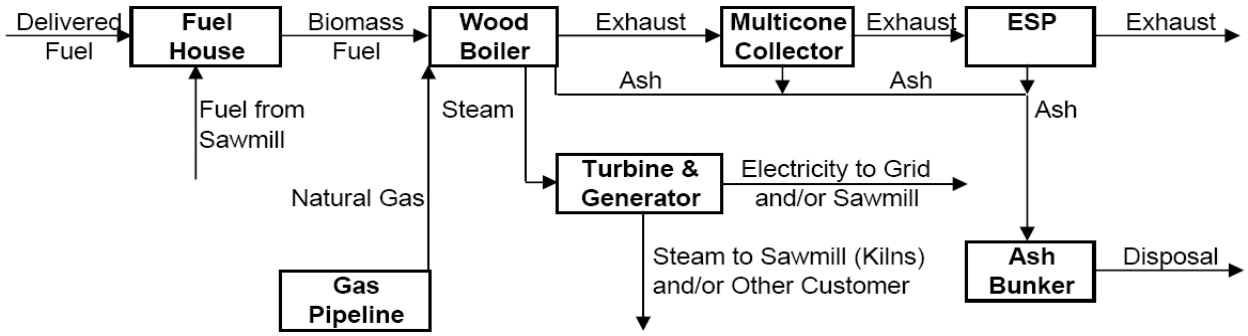

Figure 2-13 Cogeneration Plant Flow Diagram

The boiler emits oxides of nitrogen (NO_X), carbon monoxide (CO), particulate matter ($PM_{2.5}$, PM_{10} and PM), sulfur dioxide (SO_2), and volatile organic compounds (VOC), as well as several hazardous air pollutants (HAP). The boiler exhaust is identified as EU-1. Figure 2-14 shows the boiler house and ESP.

The steam turbine generator can generate up to 28 MW of electricity. A portion of the produced power is used on-site; the remaining power is sold to a public utility. Low-pressure steam is collected from the steam turbine through a controlled extraction and used to heat the dry kilns. A schematic flow diagram for the cogeneration facility is presented in Figure 2-13.

The steam turbine and generator do not emit air pollutants. The boiler criteria pollutant emissions are based on the permit limits established in the most recent PSD permit (PSD 05-04 Amendment 2) applicable to the facility. Potential HAP emissions were derived from factors for the biomass-fired boiler. Factors were derived from AP-42 Section 1.6, where the EPA combined all source test data to calculate the AP-42 emission factors regardless of boiler type or control technology. Where more specific information was available, emission factors that were based on a subset of the source tests (biomass-fired boilers controlled by ESPs). The hydrogen chloride (HCl) emission factor was based on SPI's proposed HCl emission limit of 0.02 lb/MMBtu. The ammonia emission rate was based on an anticipated maximum exhaust ammonia concentration of 50 parts per million (ppm), a consequence of operating an SNCR system to reduce boiler NO_X emissions.

Figure 2-14 Boiler House and ESP

2.3.5 Cooling Tower

The facility's cooling tower condenses steam from the turbine before it is returned to the boiler feedwater supply. The cooling tower is equipped with drift eliminators to reduce water loss associated with aerosol drift. The drift eliminators achieve a drift of 0.0005 percent or less, according to design specifications. Assuming this drift rate, a maximum water flow rate of 25,000 gallons per minute (gpm), and a conservative total dissolved solids (TDS) value of 725 milligrams per liter (mg/l), the PM_{10} emission rate from the cooling towers was calculated to be approximately one ton per year. The cooling tower is identified as EU-2. The cooling towers emissions are addressed in a NWCAA permit applicable to SPI.

2.3.6 Natural gas-fired package boiler

An Apache 2,200 bhp Scotch Marine boiler (95 MMBtu/hr) equipped with low-NOX burners and flue gas recirculation has been initially permitted on 6/21/2011. The main boiler/cogeneration plant is scheduled to undergo maintenance for about 14 days per year. The purpose of the Apache boiler is to maintain kiln operation, providing steam, during the main boiler down-time.

The Apache boiler is permitted by NWCAA OAC 1089a to burn only natural gas. The permit also includes a condition limiting annual capacity to 10 percent or less. Due to the existence of this limit, the Apache boiler qualifies as a limited-use boiler[5] under 40 CFR 63 Subpart DDDDD.

2.3.7 Facility Roadways and Storage Areas

Particulate matter is generated facility-wide from storage areas and roadways. The majority of the plant manufacturing area is paved. The facility sprays water on roadways by water

[5] Limited-use boiler any boiler that burns any amount of solid, liquid, or gaseous fuels and has a federally enforceable average annual capacity factor of no more than 10 percent. Annual capacity factor means the ratio between the actual heat input to a boiler from the fuels burned during a calendar year and the potential heat input to the boiler had it been operated for 8,760 hours during a year at the maximum steady state design heat input capacity.

truck and operates a sweep truck regularly to maintain the paved surfaces free of wood dust and dirt.

3 COMPLIANCE HISTORY

SPI has submitted quarterly emissions reports, including stack testing results, to NWCAA under the PSD and NWCAA permits since operation of the facility began in December 2006. The facility has also provided notifications of startup, shutdown, and upset events to the NWCAA.

At the time of the application for the AOP, SPI was operating the boiler in accordance with the applicable short-term NO_X limit in PSD 05-04 but in excess of the long-term NO_X limit. (More discussion of the permit condition changes is included in Section 6 of this document.) The SPI boiler was installed with selective non-catalytic reduction (SNCR) for NO_X, consisting of urea injection into the upper section of the firebox. As listed in the resolved enforcement actions section (Section 3.1 below), initial startup of the NO_X control system indicated that some design changes were necessary to optimize the effectiveness. The facility corrected the configuration of the system to meet the conditions of the permit.

However, at the same time that these corrections were being made, the feed to the boiler began including bark and chipped material from salt water-transported logs. Salts in the boiler fuel react with the excess ammonia from the SNCR control system, forming a significant secondary visible emissions plume. Based on information from other similar facilities, it was presumed that the plume was ammonium chloride and other salts that formed particulate matter. Because the plume was a secondary formation, forming after the materials left the stack, the opacity monitor could not read the level of visible emissions. The characteristics of the plume were that it was easily visible looking toward the sun and significantly less visible when looking at it with the sun at the observer's back. This characteristic resulted in the receipt of a number of phone calls from concerned residents and very limited enforcement potential because the reference method for visible emissions requires the observer to have the sun behind him/her for a valid reading.

In response to action requests by NWCAA, SPI began segregating bark from salt-transported logs, which helped address the plume formation, but did not eliminate it.

The NWCAA in conjunction with WA DOE, agreed with SPI that the best solution to mitigate the plume formation was to remove excess ammonia from the stack. All parties agreed that compliance with the 0.13 lb NO_X/MMBtu met the intention of best available control technology taking into account the reduction of secondary formation of visible particulates. SPI then reduced the injection of urea to a level only to meet this limit. In conjunction with segregation of salty bark out of the fuel, the reduction in ammonia resolved the formation of the secondary visible plume.

The new permit allowance was reflected in PSD 05-04 Amendment 1 effective August 6, 2010, resolving the non-compliance issue. Upon issuance of PSD 05-04 Amendment 1, NWCAA issued SPI a Notice of Violation for the excess NO_X emissions. No penalty was assessed.

SPI startup, shutdown and upset reports from the start of operation through the present day were reviewed. The resulting enforcement actions and summarized in Table 3-1 below. Reports from 2007 reflect the first year of operation of the source and several notices of violation were issued during that period. SPI operators call in to NWCAA periods when the boiler emissions exceed 0.35 lb CO/MMBtu as read from the CEMS output. However, during startups and shutdowns, which are defined in the permit specifically, alternate lb CO/hr limits apply. Operators at SPI act conservatively, reporting potential permit limit deviations even during times when the alternate limits apply. The quarterly reports received by the NWCAA then clarify which of the events called in to NWCAA during the reporting period were within the startup/shutdown provisions.

Upon review, 6 events in 2008 and 5 events in 2009 were found to be excess emissions periods or permit condition deviations (about half of the reported events). Each of these

events was investigated by NWCAA. The reviews showed that the all the events were short in duration, lasting from 45 min to 2 hours. The facility promptly reported each event to NWCAA and demonstrated a prompt correction to the problem. The events triggering the non-compliance periods did not appear to be results of careless operation nor were part of a pattern of operational failures. Event excess emissions ranged from 4.3 lb CO to 111 lb CO. Excess CO emissions 2008 and 2009 were less than 0.01% of the facility total, which was approximately 100 tpy CO. None of the events met any criteria for high priority violations, as defined by EPA.

During 2013, the wood-fired boiler at SPI failed two consecutive PM stack tests. According to the source test report received by the NWCAA on 08.19.2013 for a stack test performed on 6.27.2013, the PM10 average was 0.0271 lb/MMBtu. This was higher than the limit of 0.02 lb/MMBtu (PSD 05-04 Amendment 1, Condition 6.3). The facility planned for and repaired the ESP during the subsequent fall outage in October, while continuing to operate. On 11.9.2013, the boiler was shut down for inspection and repairs as needed to the electrostatic precipitator (ESP). This caused an opacity exceedance of 35% for hour 4. The excess opacity during this shutdown was related to the ongoing problems at the ESP. On 11.14.2013 the wood fired boiler again failed a PM10 stack test, with a concentration of 0.048 lb/MMBtu (AOP term 5.1.13 in AOP 019, issued on 06.10.2010). The facility shutdown the boiler and ESP unit on 12.12.2013 and found fouling of the ESP interior. After washing, the boiler and ESP were restarted on 12.14.2013. On 1.16.2014 the wood fired boiler passed a PM10 stack test, with a concentration of 0.007 lb/MMBtu.

3.1 Resolved Enforcement Actions

Notices of Violation that have been issued by the Northwest Clean Air Agency to SPI are summarized in Table 3-1. SPI responded to all NOV by making changes to its operations or equipment, in order to avoid recurrence of the incidents that caused the NOV. More information regarding each NOV is kept on file.

It should be noted that all NOV are closed, and there is no pending action against SPI at the time of writing this document.

Table 3-1 Sierra Pacific NOV

Date issued	Date occurred	NOV	
11/8/2007	4/28/2007	3630a	**Cited Regulations:** NWCAA Regulation Section 300.15: It shall be unlawful for an owner or operator of a source or emission unit to not abide by the operating and reporting conditions in an Order of Approval. **Description:** On April 28, May 17, 21, 22, 23, 25, 26, 30, 31, and on June 2, 4, and 5, 2007 the Sierra Pacific Industries Burlington facility (SPI) exceeded the daily NOx and/or the hourly CO emission limits in Prevention of Significant Deterioration permit # PSD-05-04 and thereby violated condition 1 of NWCAA Order of Approval to Construct #938. During this period, the NOx control system was ineffective due to being improperly located in the boiler. SPI was attempting to minimize NOx emissions by controlling the boiler in a way that increased CO emissions and for periods of time on each of the listed days was not able to comply with one or both of the limits. The root cause of these exceedances was improper design and/or construction, which is reasonably preventable. Reissued 11/08/07 as a warning. Warning Penalty: $0

Date issued	Date occurred	NOV	
5/2/2007	5/2/2007	3596	**Cited Regulations:** NWCAA Regulation Section 300.15: It shall be unlawful for an owner or operator of a source or emission unit to not abide by the operating and reporting conditions in an Order of Approval. **Description:** During a periodic facility inspection on May 2, 2007, NWCAA staff noted numerous and significant instances of fugitive emissions from the Sierra Pacific Mount Vernon facility. Significant accumulation of sawdust on the facility surfaces indicate a lack of sufficient cleaning as is required by OAC 938. Several access hatches on the hog fuel handling system were left open and are unnecessary sources of emissions. Contrary to what was stated in the permit application, all surfaces upon which vehicles operate are not paved and hog fuel is substantially outside of the covered chip bins. Large, uncovered ash piles exist onsite in violation of the OAC 938 requirement to store ash in closed containers. Penalty: $10,000
9/5/2007	5/28/2007	3628	**Cited Regulations:** NWCAA Regulation Section 300.15: It shall be unlawful for an owner or operator of a source or emission unit to not abide by the operating and reporting conditions in an Order of Approval. **Description:** On May 28, 2007, from 10:00am until 9:00pm, the Sierra Pacific Industries Burlington facility exceeded the 20% opacity limit in NWCAA Order of Approval to Construct #938. The hoppers of the electrostatic precipitator (ESP) overfilled, which required that the boiler be shut down. The excess opacity occurred as the ESP hoppers were manually emptied. The hoppers overfilled because the rotary system that removes ash from the hoppers was constructed using incorrect parts. As a result, the rate at which ash was removed from the hopper was inadequate. The root cause of the exceedance was improper design and/or construction, which is reasonably preventable. Penalty: $5,000
11/8/2007	6/2/2007	3629a	**Cited Regulations:** NWCAA Regulation Section 300.15: It shall be unlawful for an owner or operator of a source or emission unit to not abide by the operating and reporting conditions in an Order of Approval. **Description:** On June 2 and June 4, 2007, the Sierra Pacific Industries Burlington facility (SPI) exceeded an emission limit contained in Prevention of Significant Deterioration permit # PSD-05-04 and thereby violated condition 1 of NWCAA Order of Approval to Construct #938. On June 2 and June 4, 2007, emissions of NOx were greater than 115% of the 0.13 lb NOx/MMBtu 24-hr average limit. During this period, the NOx control system was ineffective due to being improperly located in the boiler. The root cause of the exceedance was improper design and/or construction, which is reasonably preventable. Reissued 11/08/07 as a warning. Warning Penalty: $0
2/25/2008	11/29/2007	3668	**Cited Regulations:** NWCAA Regulation Section 300.15: It shall be unlawful for an owner or operator of a source or emission unit to not abide by the operating and reporting conditions in an Order of Approval. **Description:** On November 29, 2007, Sierra Pacific Industries was found to have unapproved materials in the boiler fuel pile. The Northwest Clean Air Agency finds that Sierra Pacific violated Condition 7 of NWCAA OAC 938 by failing to adequately inspect fuel before acceptance and by combusting prohibited materials in the boiler. Penalty: $0

Date issued	Date occurred	NOV	
9/16/2009	7/23/2009	3806	**Cited Regulations:** SPI PSD 05-04 5.1.2.2: Wood-fired cogeneration unit exhaust stack NOx emissions shall not exceed, in any consecutive 12-month period: 0.10 lb NOx/MMBtu based on an average of the previous 12 months of daily values **Description:** The Sierra Pacific Industries (SPI) wood-fired boiler NOx emissions have exceeded the long-term limit in PSD 05-04 for all reported periods from May 2007 to July 2009 (a total of 27 months; 9 quarterly reporting periods). Boiler emissions were 0.11 lb NOx/million BTU heat input (12-month rolling average) for the entire period. Sierra Pacific implemented operation of the boiler at the higher NOx emission rate as part of a consensus decision with NWCAA and WA Department of Ecology. The permit limit was removed in PSD 05-04 Amendment 1, effective August 6, 2009, ending the period of noncompliance. Penalty: $0
6/9/2010	3/31/2010	3838a	**Cited Regulations:** NWCAA Regulation Section 300.15: It shall be unlawful for an owner or operator of a source or emission unit to not abide by the operating and reporting conditions in an Order of Approval. 40 CFR 60.43b(f): On and after the date on which the initial performance test is completed or is required to be completed under §60.8, whichever date comes first, no owner or operator of an affected facility that can combust coal, oil, wood, or mixtures of these fuels with any other fuels shall cause to be discharged into the atmosphere any gases that exhibit greater than 20 percent opacity (6-minute average), except for one 6-minute period per hour of not more than 27 percent opacity. SPI OAC 938b Condition 4: The exhaust stack from the wood-fired boiler shall not emit any air pollutants which exhibit greater than the following opacity limitations: a) 20% opacity for a period or periods aggregating more than 3 minutes in any 1 hour as measured by a continuous opacity monitoring system (COMS) **Description:** The following upset event at the boiler was reportedly caused by operational error. 03/31/10: 1300 operating hour: 26% opacity (1-hour average) measured by COMS; 3 6-minute averages > 20% measured by COMS; 24 minutes of opacity > 20% measured by COMS. Violation 3838 re-issued as 3838a 6/9/10 to reflect recalculation of the number of 6-minute opacity averages. Penalty: $2,000

Date issued	Date occurred	NOV	
6/9/2010	4/12/2010	3837a	**Cited Regulations:** NWCAA Regulation Section 300.15: It shall be unlawful for an owner or operator of a source or emission unit to not abide by the operating and reporting conditions in an Order of Approval. 40 CFR 60.43b(f): On and after the date on which the initial performance test is completed or is required to be completed under §60.8, whichever date comes first, no owner or operator of an affected facility that can combust coal, oil, wood, or mixtures of these fuels with any other fuels shall cause to be discharged into the atmosphere any gases that exhibit greater than 20 percent opacity (6-minute average), except for one 6-minute period per hour of not more than 27 percent opacity. SPI OAC 938b Condition 4: The exhaust stack from the wood-fired boiler shall not emit any air pollutants which exhibit greater than the following opacity limitations: a) 20% opacity for a period or periods aggregating more than 3 minutes in any 1 hour as measured by a continuous opacity monitoring system (COMS) **Description:** Sierra Pacific Industries reported four upset events at the boiler were caused by feed system plugging. Excess emissions resulting from each event are: 12/14/2009: 0700 operating hour: 23% opacity (1-hour average) measured by continuous opacity monitoring system (COMS); 22 6-minute averages > 20%* measured by COMS; 22 minutes of opacity > 20% measured by COMS. 01/01/10: 1800 operating hour: 7% opacity (1-hour average) measured by COMS; 9 6-minute averages > 20%* measured by COMS; 7 minutes of opacity > 20% measured by COMS. 2/27/2010: 1300 operating hour: 0.36 lb CO/MMBTU (1-hour average) measured by CEMS. 1400 operating hour: 25% opacity (1-hour average) measured by COMS; 31 6-minute averages > 20%* measured by COMS; 31 minutes of opacity > 20% measured by COMS. 1500 operating hour: 10% opacity (1-hour average) measured by COMS; 8 6-minute averages > 20%* measured by COMS; • 12 minutes of opacity > 20% measured by COMS. 03/31/10: 1200 operating hour: 0.42 lb CO/MMBTU (1-hour average) measured by CEMS. Violation 3837 re-issued as 3837a 6/9/10 to reflect recalculation of the number of 6-minute opacity averages. Penalty: $4,000

Date issued	Date occurred	NOV	
4/28/2014	6/27/2013	4059a	**Cited Regulations:** NWCAA Regulation Section 300.15: It shall be unlawful for an owner or operator of a source or emission unit to not abide by the operating and reporting conditions in an Order of Approval. AOP Term 5.1.13 (AOP 19 - 6/10/10): PSD 05-04- Amendment 1 (1/25/06) Condition 6.3.2.1: Boiler stack emissions shall not exceed: 0.02 lb PM10/MMBtu 24-hour average, based on the heat input value of the fuel. Compliance will be demonstrated from the arithmetic mean of not less than three 2-hour test samples. **Description:** The McBurney wood fired boiler failed two consecutive PM10 stack tests conducted on 06/27/13 and 11/14/13, with measured concentrations of 0.0271 lb/MMBtu and 0.048 lb/MMBtu, respectively (AOP 019 term 5.1.13, issued on 06/10/10). The McBurney wood fired boiler had an excess opacity event on 11/19/2013 on hour 04 during a shutdown to repair the electrostatic precipitator (ESP) with an hourly averaged opacity of 35% (OAC 938c Condition 3b, issued on 05/08/13). ESP damage and fouling were found to be the root cause of all of the excess emissions cited. The source demonstrated compliance with the standard by passing a PM10 stack test on 01/16/14. *04/28/14 - NOV 4059 modified to include additional stack test failure and common root cause opacity violation. Penalty: $110,000

4 FACILITY EMISSIONS

The SPI facility is subject to the Title V program because its potential annual NO_X, CO, VOC, and the single HAP (HCl) and total HAP emissions exceed the applicability thresholds.

Table 4-1 contains the potential to emit (PTE) from point sources at the SPI Mount Vernon facility as reported by SPI in its initial AOP application received by NWCAA on 12/31/2007, and amended to include the potential emissions of the package boiler that was first permitted on 6/21/2011. The boiler emissions are post-control.

Table 4-1 Potential to Emit - Criteria Pollutants

Pollutant	Boiler tpy	Cooling Tower tpy	Planer Mill tpy	Dry Kilns tpy	Anti-mold Spray tpy	Fugitive Emissions tpy	Package Boiler tpy	Plant-wide tpy
NO_X	245						166	411
CO	659						30.8	690
SO_2	47						3.0	50
PM/PM_{10}	37.7	0.9	9.4	5.9		2.2	3.1	59
$PM_{2.5}$	37.7	0.9	9.4	5.9			3.1	57
VOC	35.8			120	9.00		2.2	167
H_2SO_4	3.8							3.8

SPI is also major for HAP. It has the potential to emit about 16 tons of acetaldehyde, 3.3 tons of formaldehyde, 8.4 tons of methanol, and 37.7 tons of hydrochloric acid. These pollutants are all HAP, and they are the ones with the largest PTE at SPI.

4.1 Actual Emissions

SPI is required to submit emissions annually by April 15 for the preceding calendar year. Table 4-3 contains the emissions of criteria and other major pollutants reported by SPI until 2013, which is the latest year emissions have been reported as of the time of writing this document. Table 4-4 contains the emissions of toxic air pollutants. These emissions include those from normal operation as well as upsets.

Table 4-2 Actual Criteria Air Pollutant Emissions

Criteria Air Pollutant	2007 tpy	2008 tpy	2009 tpy	2010 tpy	2011 tpy	2012 tpy	2013 tpy
PM	29.5	42.1	42	56	49	73	80
PM_{10}	20	30	29	38	33	37	45
$PM_{2.5}$	16	1	1	2	2	3	4
SO_2	1	34	22	23	35	2	1
NO_X	91	109	138	174	170	172	159
VOC	39	43	51	62	70	71	66
CO	95	109	129	234	287	306	277
NH_3	4	6	3		10	3	4

Table 4-3 Actual Toxic Air Pollutant Emissions

Toxic Air Pollutant	2007 lb/yr	2008 lb/yr	2009 lb/yr	2010 lb/yr	2011 lb/yr	2012 lb/yr	2013 lb/yr
Acetaldehyde	11,800	14,884	16,492	19,508	17,158	18,114	18,619
Acrolein	200	198	216	258	223	233	245
Formaldehyde	200	195	223	257	237	256	249
Methanol	7,600	10,518	10,709	13,071	10,785	11,211	12,274
Phenol	400	515	628	690	700	762	685
Turpentine	35,400	39,378	48,445	52,901	54,287	59,221	52,680

5 FEDERAL REQUIREMENTS

The facility owns and operates equipment regulated under federal regulations.

5.1 New Source Performance Standards

EPA has established New Source Performance Standards (NSPS) for new, modified, or reconstructed facilities and source categories in 40 CFR Part 60.

5.1.1 Subpart A – General Provisions

If a New Source Performance Standard in 40 CFR Part 60 applies to a facility, Subpart A also applies. Some of the requirements from Subpart A have been included in the permit, and some have not. If a requirement is applicable when triggered by some action, it was not included in the permit. Similarly, if a part of Subpart A did not have concrete requirements for the facility (i.e., if it solely addressed applicability or definitions), it was not included. If the requirement was something in the past, or addressed something that a regulatory agency must do, it was not included. The fact that these parts were not included in the permit does not exempt the facility from the requirements if they are triggered by any future actions.

The Subpart A requirements appear in Section 3 of the AOP.

5.1.2 Subpart Db - Standards Of Performance for Industrial-Commercial-Institutional Steam Generating Units (Greater than 100 MMBtu/hr)

40 CFR 60 Subpart Db addresses emissions from boilers constructed after June 19, 1984 having a heat input of greater than 100 million British thermal units per hour (MMBtu/hr). Subpart Db applies to the cogeneration boiler because the rated heat input of that unit is 430 MMBtu/hr and the unit commenced constructed in 2005.

Subpart Db limits PM emissions to 0.085 lb/MMBtu. At the proposed maximum firing rate, this limit translates into an emission rate of 36.6 lb PM/hr. Subpart Db also requires exhaust opacity to be 20 percent or less (6-minute average), except for one 6-minute period per hour, which cannot exceed 27 percent opacity. SPI is required by Subpart Db to monitor opacity with a continuous opacity monitoring system (COMS). These limits do not apply during startup, shutdown, or during a malfunction. The Ecology PSD permit (PSD 05-04 Amendment 2) has a more stringent boiler exhaust PM emission limit, and NWCAA permit (OAC 938c) has a more stringent boiler exhaust opacity limit, than corresponding NSPS requirements.

The cogeneration unit burns natural gas during startup and to maintain flame stabilization. Subpart Db imposes SO_2 and NO_X limits on boilers that fire fossil fuels under certain conditions. The SO_2 limits do not apply to boilers that combust natural gas. The NO_X limits in Subpart Db do not apply to boilers that have a federally enforceable requirement that limits annual fossil fuel capacity factor to less than ten percent. SPI maintains on-site records of the quantities and times that natural gas is fired in the boiler to ensure that gas provides less than ten percent of the annual fuel input. The AOP imposes a 0.10 annual fuel factor for natural gas exempting the facility from the NO_X limits in the regulation.

5.1.3 Subpart Dc – Standards of Performance for Industrial-Commerical-Institutional Steam Generating Units (10-100 MMBtu/hr)

40 CFR 60 Subpart Dc addresses emissions from boilers constructed after June 9, 1989 having a heat input rate greater than 10 MMBtu/hr but less than 100 MMBtu/hr. Subpart Dc applies to the Apache package boiler because the unit has a heat input rate of 95 MMBtu/hr and was constructed in 2011.

The main boiler/cogeneration plant is scheduled to undergo maintenance for about 14 days per year. The purpose of the Apache boiler is to maintain kiln operation, providing steam during the main boiler down-time. The Apache boiler is permitted by NWCAA OAC 1089a to burn only natural gas. The permit includes a condition limiting annual capacity to 10 percent or less.

5.2 National Emissions Standards for Hazardous Air Pollutants (NESHAP)

EPA has established National Emission Standards for Hazardous Air Pollutants (NESHAP) under 40 CFR 63 to regulate HAP emissions from major sources of HAP. This regulatory program defines a "major source" as any facility that has the potential to emit more than 10 tons per year of a single HAP or more than 25 tons per year of all HAP combined. The highest single HAP potential to emit at the facility is HCl at 37.7 tons per year. Overall, the facility has a combined potential to emit of 58.6 tons per year for all HAP. As a result of the annual facility-wide HCl emissions exceeding 10 tons per year, and total HAP emission rate exceeding 25 tons per year, the facility is a major source with respect to the NESHAP program.

5.2.1 Subpart A – General Requirements

If a Standard in 40 CFR Part 63 applies to a facility, portions of Subpart A also apply. Some of the requirements from Subpart A have been included in the permit, and some have not. If a requirement is applicable when triggered by some action, it was not included in the permit. Similarly, if a part of Subpart A did not have concrete requirements for the facility (i.e., if it solely addressed applicability or definitions), it was not included. If the requirement was something in the past, or addressed something that a regulatory agency must do, it was not included. The fact that these parts were not included in the permit does not exempt the facility from the requirements if they are triggered by any future actions.

Subpart A requirements for notifications are included in Section 3 of the AOP. These sections are triggered by the applicability of other Subparts to the facility.

5.2.2 Subpart DDDD – Plywood and Composite Wood Products

As a major source of HAPs, the facility is subject to applicable promulgated MACT standards. 40 CFR Part 63 Subpart DDDD applies to the dry kilns. Construction of the dry kilns commenced in December 2005. Therefore, these units are considered new sources under 40 CFR 63 Subpart DDDD. The only applicable requirement (40 CFR §63.2252) to the kilns is the initial notification requirement in 40 CFR §63.9(b). Pursuant to 40 CFR §63.9(b)(iii), the initial combined NOC and PSD permit application served as the initial notification for the lumber dry kilns. Therefore, the facility has met this requirement and there are no additional compliance provisions applicable to the facility under this regulation included in the AOP.

5.2.3 Subpart DDDDD – Industrial, Commercial and Institutional Boilers and Process Heaters

40 CFR Part 63 Subpart DDDDD, often referred to as the "boiler MACT," is intended to regulate industrial, commercial, or institutional boilers or process heaters that are located at a major source of hazardous air pollutants. SPI owns and operates two boilers that are subject to the boiler MACT.

One, the Apache 95 MMBtu/hour boiler is limited by a federally enforceable permit (OAC 1089a) to an annual capacity factor of less than 10% (see footnote 6 in this document), and as such is only required by the boiler MACT to have a tune-up every 5 years, according to §63.7500(c).

The biomass-fired boiler qualifies as an "existing" "large solid fuel unit" without oxygen trim under the boiler MACT. According to §63.7499, the biomass-fired boiler at SPI qualifies under paragraph (i): Stokers/sloped grate/other units designed to burn wet biomass/bio-based solid. The rule, which includes a variety of emission standards, work practice standards, monitoring, testing, and recordkeeping requirements for such units, has been included in the AOP. The rule allows a facility to comply with some of the standards using either performance testing or by performing fuel analysis. SPI has requested that both methods be included in the AOP to allow for operational flexibility.

The biomass-fired boiler was required to install a COMS under NWCAA OAC 938c. Table 4 of the boiler MACT specifies operating limits for boilers. Line 4 of this table applies to the biomass-fired boiler at SPI. This line is further split into two options, 4a and 4b. A source must meet one of the two options. SPI will meet option 4a that stipulates a limit of 10% opacity, daily block average. Since SPI is equipped with a COMS, the COMS will be used for showing compliance with the 10% opacity daily block average limit.

5.3 PSD and Major New Source Review

EPA established the Prevention of Significant Deterioration program to ensure that new or expanded sources do not cause a significant deterioration in the air quality of areas that currently meet applicable air quality standards. SPI submitted a PSD permit application for the facility in 2005 because the facility's potential CO emissions exceeded the 250 ton per year PSD applicability threshold for non-designated sources. The facility's initial PSD permit was issued on December 12, 2005 (PSD 05-04). PSD 05-04 Amendment 1 was issued on August 6, 2009. PSD 05-04 Amendment 2 was issued on October 28, 2013. These amendments are discussed further in Section 6 of this document.

5.4 Title IV Acid Rain Provisions

Title IV of the federal Clean Air Act regulates SO_2 and NO_X emissions from fossil fuel-fired electrical generation facilities. 40 CFR §72.6 identifies criteria used to determine whether a facility is subject to the Acid Rain Program. §72.6(b)(4)(ii) states that a biomass-fired cogeneration unit is not subject to the program if it sells no more than one third of its potential annual electrical output capacity or if it sells less than 219,000 megawatt (electric)-hours (MWe-hrs) of electricity annually. A cogeneration unit meeting either of these criteria is not subject to the Acid Rain Program.

The biomass-fired boiler at the facility meets the definition of a "cogeneration unit" in 40 CFR §72.2 because at least a portion of the steam generated by the boiler is delivered first to the steam turbine and then to the adjacent lumber manufacturing facility as steam for heating. Thus, the steam is "used twice." Additionally, SPI is capable of selling up to 219,000 MWe-hrs of power annually, which will be more than one-third of the boiler's annual potential electrical output capacity (219,000 MWe-hrs calculated as described in Appendix D to Part 72). However, the boiler is an unaffected source because SPI does not sell more than 219,000 MWe-hrs of electricity annually. The facility maintains records of the amount of electricity generated and sold. The electricity sale records are used to confirm the facility sells less than 219,000 MWe-hrs of power annually. Due to the boiler's cogeneration status and electrical sales, this boiler is considered an unaffected source.

5.5 Compliance Assurance Monitoring

EPA established the Compliance Assurance Monitoring (CAM) program to regulate emission sources that employ a control device to maintain compliance with an enforceable emission limit or standard. 40 CFR §64.2 establishes the three applicability criteria for the CAM program:

- The unit is subject to an emission limit, other than an emission limit from a NSPS or NESHAP that was proposed after November 15, 1990
- The unit uses a control device to achieve compliance with that limit, and
- The unit has potential pre-control device emissions of the applicable regulated air pollutant that are equal to or greater than 100 percent of the amount, in tons per year, required for a source to be classified as a major source.

For units that all 3 applicability criteria above apply, one further criterion is evaluated to determine whether a CAM Plan is needed: if a unit is equipped with a continuous monitor (i.e., CEM or COM) and monitoring for compliance with a limit is done using the continuous monitor, then a CAM plan is not required for that unit for that specific limit or standard.

With the exception of the biomass-fired boiler and the planer mill dust collection system, none of the facility's emission sources employ pollution control equipment. The cooling tower is equipped with a mist eliminator; however, the primary purpose of the mist eliminator is not to control emissions. All cooling towers employ mist eliminators as process equipment to minimize water loss during operation.

CAM summary for Emission Units at SPI:

Emission Unit	Add-on Control Device Present?	Is unit subject to emission limit or standard for which the unit has a control device?	If control is present, what pollutant does it control?	Are pre-control emissions greater than 100% of major source?	Is unit equipped with a continuous monitor for the pollutant for which it exceeds 100% of major source?	Is a CAM Plan Required?
Cogeneration Facility (biomass-fired boiler)	Yes – ESP, mulitclone, & SCR	Yes: PM & Opacity Yes: NOx	ESP - PM & Opacity SCR - NOx	Yes for PM, Opacity, and NOx (see Section 5.5.1)	Yes, CEMS for NOx (see Section 5.5.1) Yes, COMS used	**NOX: NO** – CEM used to show compliance for all applicable limits (see

Emission Unit	Add-on Control Device Present?	Is unit subject to emission limit or standard for which the unit has a control device?	If control is present, what pollutant does it control?	Are pre-control emissions greater than 100% of major source?	Is unit equipped with a continuous monitor for the pollutant for which it exceeds 100% of major source?	Is a CAM Plan Required?
					for some, but not all, opacity limits (see Section 5.5.1)	Section 5.5.1) **PM& Opacity: YES** for some limits not monitored continuously (see Section 5.5.1)
Planer Mill	Yes – Baghouse	Yes: PM & Opacity	PM & Opacity	Yes for PM (see Section 5.5.2)	No	**PM & Opacity: YES** (See Section 5.5.2)
Cooling Towers	No controls	No controls	No controls	No controls	No	No
Dry Kilns	No controls	No controls	No controls	No controls	No	No
Anti-mold spray chamber	No controls	No controls	No controls	No controls	No	No
Natural Gas package boiler	No controls	No controls	No controls	No controls	No	No

5.5.1 Wood-fired (biomass) boiler

The boiler is equipped with a multiclone and ESP for particulate control and an SNCR system for NO_X control. For PM, opacity, and NOx, the biomass-fired boiler is subject to emission limits stemming from a PSD, 40 CFR 60 Subpart Db, 40 CFR 63 Subpart DDDDD, NWCAA OAC permits, the WAC, and the NWCAA Regulation. As discussed above, the boiler uses control devices to achieve compliance with its opacity, PM_{10} and NO_X limits.

The pre-control emissions of PM_{10} and NOx are evaluated as follows:

- The technical support document for PSD 05-04, which SPI received for the biomass boiler, states that post-control potential emissions of NOx are 188 tpy. Pre-control emissions of NOx can only be larger and were not evaluated since post control emissions were above 100 tpy.
- The technical support document for PSD 05-04 states that the post-control potential emissions of PM_{10} are 54 tpy. Assuming that the ESP and multiclones have a 90 percent control efficiency for PM_{10}, the pre-control potential PM_{10} emissions are greater than 540 tons per year.

5.5.1.1 NOx emissions limits monitored using CEMS

Although the boiler has pre-control emissions of NOx that are more than 100 tpy, a CAM plan is not required if continuous monitoring using a CEM is required to show compliance with those standards. The facility's PSD permit 05-04 requires that SPI install a NO_X CEMS on the boiler and requires the use of that CEMS to demonstrate compliance with the NOx limits stemming from the PSD. Therefore, as established in 40 CFR §64.3(d)(1), the NOx CEMS satisfies the requirements of Part 64 and therefore a CAM plan for NO_X is not required.

5.5.1.2 NOx emission limits not monitored using CEMS

The biomass boiler is not subject to any NOx emission limits other than those in SPI's PSD 05-04 permit.

5.5.1.3 Opacity emissions limits using COMS

Because the boiler's pre-control PM_{10} emissions are greater than 100 tpy, the boiler is also subject to CAM review for opacity. The boiler is equipped with a continuous opacity monitoring system (COMS), which was required by NWCAA OAC 938c. The COM is the compliance method for the following OAC 938c and federal NSPS requirements:

- OAC 938c Condition 3a: 20% opacity for a period or periods aggregating more than 3 minutes in one hour
- OAC 938c Condition 3b: 5% opacity, 1 hour average and 10% opacity, during soot blowing
- 40 CFR 60 Subpart Db: 20% opacity (6 minute average) except for one 6-minute average per hour of not more than 27% opacity

A CAM Plan is not required for these requirements because the COMS satisfies the requirements for continuous monitoring.

5.5.1.4 Other Opacity emissions limits

Because the boiler's pre-control PM10 emissions are greater than 100 tpy, the boiler is subject to CAM review for opacity. The following additional opacity limits apply. These limits are evaluated separately from the limits identified in Section 5.5.1.3 because, unlike the limits in Section 5.5.1.3, the COM is not sufficient to demonstrate compliance as compliance must be demonstrated outside of the boiler stack:

- NWCAA 451.1: less than 20% opacity for any period aggregating more than 3 minutes in any 60 minute period
- WAC 173-400-040(1): less than 20% opacity for any period aggregating more than 3 minutes in any 60 minute period
- OAC 938c Condition 3c: less than 10% opacity for any period aggregating more than 3 minutes in any 60 minute period

NWCAA determined that a CAM Plan was needed for the above requirements. SPI submitted a PM CAM plan for the biomass boiler with their first Title V renewal application as stated in 40 CFR §64.5(b). This CAM plan is applicable to both PM and opacity. SPI's proposed a CAM plan based on both COM readings and ESP voltage measurements. The provisions of the CAM plan have been included in AOP terms reference the above mentioned opacity limits. The plan is shown in Section 10 of this document.

Note that in addition to complying with the CAM plan, the monthly visible emission checks required by AOP term 4.12 serve to further demonstrate compliance with the visible emission limits and validate the CAM plan monitoring parameters.

5.5.1.5 PM emissions limits

The biomass boiler is not equipped with a particulate matter continuous monitor. The following particulate matter emission limits and standards apply:

- PSD 05-04: 0.02 lb PM_{10}/MMBtu 24-hour average, based on the heat input value of the fuel
- PSD 05-04: 37.7 tons PM_{10} in any consecutive 12-month period
- NWCAA Regulation and WAC: 0.10 grain/dscf (0.23 g/dry m^3) (corrected to 7% oxygen)
- NWCAA Regulation and WAC: 0.05 grain/dscf (0.11 g/dry m^3) (corrected to 7% oxygen) when burning gaseous fuel

SPI has submitted a PM CAM plan for the biomass boiler with their first Title V renewal application as stated in 40 CFR §64.5(b). SPI has proposed a CAM plan based on opacity and voltage measurements. The provisions of the CAM plan have been included in AOP terms which reference the above mentioned PM limits. The plan is shown in Section 10 of this document.

Note that in addition to complying with the CAM plan, the monthly visible emission checks required by AOP term 4.12 and the annual PM testing requirements in AOP term 5.1.14 serve to further demonstrate compliance with the PM emission limits and validate the CAM plan monitoring parameters.

5.5.1.6 Large pollutant specific emission units

According to 40 CFR §64.5(a), a large pollutant-specific emissions unit (PSEU) is one with the potential to emit (taking into account control devices) the applicable regulated air pollutant in an amount equal to or greater than 100 percent of the amount, in tons per year, required for a source to be classified as a major source.

Based on this definition, the biomass boiler is not a large PSEU for PM: the post-control emissions are under 100 tons per year, since the ESP is limited to 0.02 lb/MMBtu, with an annual potential emission of 39.4 tpy of PM.

As discussed above, because the biomass boiler has a post-control limit of more than 100 tpy of NOx, it would be a large PSEU for that pollutant under CAM. However, since all NOx limits for the biomass boiler are required to demonstrate compliance using a CEMS, no CAM plan is required.

5.5.2 Planer Mill

The planer mill dust collection system employs a baghouse for particulate control. The planer mill dust collection system is subject to a PM_{10} emission limit (0.005 gr/dscf, and not more than 9.4 tons of PM_{10} per year, from PSD 05-04 Amendment 2) and a baghouse control device achieves compliance with its PM_{10} limit. The baghouse is also subject to opacity limits (generally applicable opacity limits in Section 4 of the AOP). According to Chapter 1 of EPA's CAM Technical Guidance Document[6], pre-control device emissions can be estimated using post-control potential to emit and the estimated control device efficiency. The baghouse controlling the planer mill is subject to an annual PM_{10} limit of 9.4 tons per year. Assuming conservatively that the baghouse has greater than 99 percent control efficiency for PM_{10}, the pre-control potential PM_{10} emissions are greater than 930 tons per year. As a result, the baghouse controlling emissions from the planer mill is subject to CAM.

Visible emissions from baghouse are directly related to sawdust particulate matter emissions; when a baghouse is functioning properly, no visible emissions will be observed. Since the baghouse controls PM emissions to below the major source threshold, 40 CFR §64.3(b)(4)(iii) requires data collection at least once per 24-hour period. The SPI AOP was modified during this renewal to include the CAM Plan, which consists of daily observation of emissions from the baghouses and daily readings of the pressure drop across the baghouses. This monitoring, annual testing already required, plus monitoring records were found to be appropriate based on guidance provided by EPA in a Frequently Asked Questions Concerning the CAM Rule (October 2004) guidance document[7]. In this document, EPA stated that daily observation for any visible emissions from a baghouse stack satisfies the monitoring requirement of CAM for PM emissions.

As mentioned above, the maximum PM emission rate of the planer mill baghouse is 9.4 tpy. The potential controlled PM_{10} emissions from the planer mill baghouse are less than 100 tpy, and therefore the unit is not classified as a large PSEU.

SPI has proposed a CAM plan based on pressure drop monitoring across the bags of the baghouse. The CAM provisions are included in AOP Terms 4.13 and 5.3.1. The CAM plan is shown in Section 11 of this document.

5.6 Other Federal New Source Review Programs

The entire jurisdiction of NWCAA is designated as in attainment for all criteria pollutants. For this reason no other federal new source review programs for new or modified sources of air pollution in a nonattainment area are applicable.

[6] http://www.epa.gov/ttnchie1/mkb/documents/TSD_1.pdf, accessed on 4/3/2015

[7] www.epa.gov/ttn/emc/cam/camfaq1r1004.pdf, accessed on 4/3/2015

6 PSD AND OAC PERMITS

SPI has been issued a series of permits by WA Department of Ecology and NWCAA.

6.1 Obsolete Orders

This section describes Orders of Approval to Construct (OACs) and permits that are expired or superseded in order to provide the facility history of changes impacting emissions.

6.1.1 OAC 938 and PSD 05-04

SPI submitted a combined Notice of Construction (NOC) application and a Prevention of Significant Deterioration (PSD) permit application for the facility to the Northwest Clean Air Agency (NWCAA) and the Washington Department of Ecology (Ecology) on August 22, 2005. Order of Approval to Construct (OAC) 938 and the permit PSD 05-04 were issued in parallel on December 12, 2005. Construction of the SPI facility began December 2005 and the facility commenced operations on December 30, 2006 under these permit actions.

OAC 938 limited throughput of the kilns to 150 million board feet of lumber over any consecutive 12-month period. The purpose of the requirement was to limit formaldehyde emissions to less than 195 lb/year, which is the point at which modeling indicated that the "acceptable source impact level (ASIL)" for the pollutant formaldehyde was reached. The 195 lb/year amount and the resulting 150 MMbf/year limit were based on the worst case of the two allowed wood species – Hemlock. Under this scenario, SPI could dry up to 100% hemlock and remain under the formaldehyde ASIL.

OAC 938 was superseded by OAC 938a.

PSD permit 05-04 limited VOC and PM_{10} emissions from the kilns as requested by SPI, in order to facilitate issuance of the PSD permit. These emission caps kept the facility below the thresholds requiring significant modeling work.

Permit PSD 05-04 was superseded by Amendment 1 issued and effective August 6, 2009.

6.1.2 PSD 05-04 Amendment 1

Throughout 2007 and 2008, SPI found that more of the total production required drying because the market for green (not dried) lumber was declining (as stated in the OAC 938a modification application). Therefore, the facility needed to dry most, if not all, of the mill production in order to remain competitive. Additionally, according to SPI, production improvements implemented by the facility resulted in an actual mill capacity of 400 MMbf/yr. The actual capacity of the kilns is also now known to be up to 400 MMbf/yr as-built.

In the PSD modification application and the associated minor permit modification (OAC 938b) application, SPI requested that the kiln throughput limit be lifted to 400 MMbf/yr with resulting criteria, toxic air pollutant (TAP), and hazardous air pollutant (HAP) emission increases. SPI proposed that kiln throughput be limited by emissions not by production rate directly in order to provide flexibility for the species dried in the kilns.

The PSD permit addresses the criteria pollutant emission limits and OAC 938b addresses the toxic air pollutant limits that changed during this permit revision.

Because the proposed project was a PSD circumvention case avoiding full modeling requirements, PSD guidance document, Tyler memo 7/5/85 page 10 requires that the project be treated as a new source for purposes of modeling. SPI utilized Environ consultants to fulfill the modeling requirements and provide a full ambient impact analysis. WA DOE and EPA conducted the reviews for all the modeling results.

The ambient impact results showed that full throughput at the kiln had to be limited in conjunction with extending the facility fence line to the west of the kilns in order to manage $PM_{2.5}$ increment consumption. The PSD 05-04 Amendment 1 terms includes terms to address the new property boundary and limiting the kiln throughput to meet the modeling results. The PSD 05-04 Amendment 1 permit also includes ambient $PM_{2.5}$ monitoring in the area of proposed impact within the facility boundary.

The application requested that the PSD NO_X limit be lifted from 188 tpy to 245 tpy to offset the formation of secondary visible emissions resulting from the reaction of fuel salts with injected urea. This increase is seen as dropping the long term 0.10 lb NO_X /MMBtu leaving only the short-term 0.13 lb NO_X /MMBtu limit in place.

PSD 05-04 Amendment 1 was issued August 6, 2009 superseding and replacing PSD 05-04.

6.1.3 OAC 938a

On December 18, 2007, SPI applied to change the kiln throughput limitations of OAC 938. Throughout 2007 SPI found that the facility was drying less hemlock than anticipated, and needed to dry more Douglas fir lumber to respond to market demands. SPI requested changes in their permit to raise allowable kiln throughput to 180 MMbf on a calendar year basis and the addition of a formaldehyde limit of 195 pounds over any consecutive 12-month period. The modified permit allowed more flexibility, requiring SPI to track throughput of each allowable wood species and to calculate formaldehyde emissions on a monthly basis.

During the time interval between issuance of OAC 938 and 938a, new emission factors had been developed for formaldehyde from dry kilns. It was found that emissions of formaldehyde increased if the kiln operated at temperatures in excess of 200°F. The permit findings identified kiln temperatures controlled below 200°F to be BACT for VOC and TBACT.

OAC 938a was issued on January 17, 2008, superseding and replacing OAC 938. OAC 938a was superseded by OAC 938b.

6.1.4 OAC 938b

In conjunction with the PSD 05-04 Amendment, SPI requested associated and additional changes to the NWCAA OAC. SPI requested that the COMS-measured opacity limit on the cogeneration unit be increased from 5% to 10% to accommodate soot blowing. In interviews with the facility operators, soot blowing at the boiler was being deferred from the recommended rates to meet the opacity limits in place. OAC 938b provides a term that allows for scheduled soot blowing twice per day, easing the opacity limit during that hour to the requested 10% limit. This change does not impact the BACT determination for visible emissions for the boiler – most other wood-fired boilers have provisions for soot blowing included in the permits.

Emissions of acetaldehyde, acrolein, and formaldehyde at full capacity in the kilns resulted in ambient levels exceeding the ASILs, therefore, Tier 2 review was required for those compounds. The tier 2 review was conducted by WA DOE and the technical support document is included in the background documentation for OAC 938b.

T-BACT was employed to mitigate the impact of the emissions in this case. “T-BACT” is best available control technology for toxic air pollutants. The kilns in question were using T-BACT at the time of the original application, which is no add-on controls, plus the additional limitation of not exceeding an average operating temperature of 200 °F.

OAC 938b imposes facility-wide limits of acetaldehyde, acrolein, and formaldehyde reflective of the Tier 2 modeling analysis. The WAC 173-460 tier 2 approval by WA DOE is included as part of the OAC upon issuance of the permit.

SPI submitted an ammonia emissions monitoring plan to the NWCAA in 2007. The plan noted that testing demonstrated that at the highest input of urea, the facility does not exceed the 50 ppmdv limit imposed by the permit. Therefore, the facility proposed to demonstrate compliance with the ammonia slip limit annually through source testing. The AOP reflects that there is no additional monitoring for ammonia slip beyond the annual testing and that any modification triggers an update of the plan. OAC 938b includes language that places operation and maintenance (O&M) requirements on the urea injection system.

OAC 938b was issued on February 23, 2009, superseding and replacing OAC 938a.

6.1.5 OAC 1089

On 4/12/2011 SPI applied for a permit to install and operate a 95 MMBtu/hr natural gas-fired package boiler in order to maintain kiln operation during the wood-fired boiler down-time.

The wood-fired boiler scheduled maintenance time is 14 days per year (336 hours) and is under contract with Puget Sound Energy for power production for all remaining days of the year. SPI has requested an operating limit of 876 hours per year to accommodate both scheduled maintenance and unforeseen boiler downtime.

OAC 1089 was issued on 6/21/2011, and was superseded by OAC 1089a on 11/14/2014.

6.2 Effective Orders and Permits

The following Orders of Approval to Construct (OAC) and Regulatory Orders for specific equipment are currently valid at the facility and included in the AOP.

6.2.1 PSD 05-04 Amendment 2

SPI submitted an application to Ecology on April 5, 2013, requesting to revise the dry kiln emission factor for western hemlock in PSD permit 05-04, Amendment 1.

In support of this PSD revision, SPI submitted to Ecology two sets of source test results for a pilot dry kiln at the CHEMCO facility in Ferndale, Washington, which simulated the process of the dry kilns at SPI's Mt. Vernon facility[8].

In Amendment 2, the dry kiln emission factor for western hemlock (Section 23.3.2), was lowered from 0.04 lb PM/PM10/PM2.5/Mbf to 0.02 lb PM/PM10/PM2.5/Mbf.

PSD 05-04 Amendment 1 was superseded by Amendment 2 issued and effective October 23, 2013.

6.2.2 OAC 938c

On February 14, 2013, SPI submitted an application proposing to utilize "urban wood waste" fuel ("alternative fuel") for up to 50% of the wood-fired boiler's fuel demand. Specifically, SPI proposed to remove the words "from wood products industries" from condition 8 of OAC 938b to allow no more than 50% of fuel combusted in the existing biomass-fired cogeneration boiler to be purchased from fuel suppliers other than those in the wood products industry.

OAC 938b was superseded by OAC 938c issued and effective May 8, 2013.

[8] See the findings in Amendment 2 of PSD 05-04 for more information.

6.2.3 OAC 1089a

On October 27, 2014, SPI applied to NWCAA to amend the language in Condition 1 of OAC 1089 that keeps the natural gas-fired package boiler as “limited use” boiler as defined in 40 CFR 63 Subpart DDDDD.

OAC 1089 limited the boiler to 876 hours of operation per calendar year. The language was changed to reflect what 40 CFR 63 Subpart DDDDD allows: that limited use boilers are those that do not exceed 10% of the annual capacity factor.

The annual capacity factor is defined as the ratio between the actual heat input to a boiler or process heater from the fuels burned during a calendar year and the potential heat input to the boiler or process heater had it been operated for 8,760 hours during a year at the maximum steady state design heat input capacity.

The conditions pertaining to NOx and CO limits, as well as the testing provisions, also were deleted. The original permit called only for an initial test, which had been done on 05.10.2012. Results were 1.08 lb NOx/hour (limit of 1.7 lb/hr) and 0.08 ppmv CO (limit of 50 ppmv).

OAC 1089 was superseded by OAC 1089a issued and effective November 14, 2014.

7 COMPLETED REQUIREMENTS

These requirements are applicable, but they are "one-time" in nature, in that they only have to be complied with once, usually in the startup phase of a project. Once this type of requirement has been fulfilled, it is placed in this Completed Requirements Section.

7.1 40 CFR 60 Subpart Db, §60.40b (6/13/07, unless otherwise noted)

The cogeneration facility is subject to Subparts A and Db of the NSPS. Subpart A contains a number of notification requirements that are considered to be one-time. Once these notification requirements have been fulfilled they can be moved to this section. SPI submitted the notification of commencement of construction in their application for OAC 938 on August 22, 2005. They submitted notification via email that the cogeneration facility had commenced operation, stating that operations had commenced on December 30, 2006. They submitted the notification and test protocol for the initial source testing and relative accuracy test audit (RATA) of the continuous emission monitoring system (CEMS) on December 21, 2007.

7.2 40 CFR 63 Subpart DDDD, §63.2252 (2/16/06)

For process units not subject to the compliance options or work practice requirements specified in §63.2240 (including, but not limited to, lumber kilns), the source is not required to comply with the compliance options, work practice requirements, performance testing, monitoring, SSM plans, and recordkeeping or reporting requirements of Subpart DDDD, or any other requirements in subpart A of 40 CFR 63, except for the initial notification requirements in §63.9(b). SPI submitted the initial notification in their application for OAC 938 on August 22, 2005. They submitted notification via email that the dry kilns had commenced operation, stating that operations had commenced on December 30, 2006.

7.3 40 CFR 63 Subpart DDDDD §63.7545(b)

According to §63.7545(b), SPI must have submitted to an initial notification not later than 120 days after 1/31/2013. SPI has submitted the initial notification to EPA Region X with a letter dated 5/30/2013.

7.4 PSD 05-04 Amendment 1

Condition 1: Requirements specified in the following approval conditions for SPI to notify or report to or acquire approval or agreement from "Ecology and the Northwest Clean Air Agency" may be satisfied by providing such notification, reporting, or approval request to the Northwest Clean Air Agency if the approval conditions of this PSD permit have been incorporated in SPI's Title V permit (40 CFR Part 70). Therefore, there are no ongoing compliance provisions in this term to incorporate into the AOP.

Condition 2: requires that SPI shall obtain and maintain exclusive control over property described as "That portion of New Lot 2 of that certain Boundary Line Adjustment as shown on Record of Survey recorded under Auditor's file number 200905290102, records of Skagit County, Washington, more particularly described as follows:

Commencing at the Northeast corner of Lot 1, SP No. 94-035 and Southeast corner of Lot 3, SP No. 7-89 of said Boundary Line Adjustment;

Thence South 0°05'32" West along the East line thereof, a distance of 346.07 feet to the Northeast corner of said Lot 2 and the TRUE POINT OF BEGINNING;

Thence South 64°44'57" West a distance of 106.24 feet;

Thence South 32°07'06" West a distance of 76.28 feet;

Thence South 02°55'39" East a distance of 64.91 feet;

Thence South 36°39'48" East a distance of 80.70 feet;

Thence South 78°46'53" East a distance of 86.39 feet to a point on the East line of said Lot 2, which bears South 00°05'32" West from the TRUE POINT OF BEGINNING;

Thence North 00°05'32" East a distance of 256.37 feet to the TRUE POINT OF BEGINNING.

Situated in Skagit County, Washington

AND ALSO INCLUDING

That portion of vacated Swinomish Avenue contiguous to the South line of Block 9, Plan of Fredonia according to the plat there of recorded in Volume 2 of Plats, page 25, records of Skagit County, said portion lying Northerly of the following described line:

Beginning at the Northwest corner of Block 10 of said Plan of Fredonia as shown on that certain Record of Survey map recorded under Skagit County Auditor's File No. 200006020092;

thence South 0°05'33" West 521.96 feet along the West line of said Plan of Fredonia to the Southwest corner of said Block 9;

thence continue South 0°05'33" West 1.8 feet, more or less , along said West line, to an existing wire fence and the TRUE POINT OF BEGINNING of said line;

thence South 86°23'42" West 29.4 feet from the Northeast corner of the Quit Claim Deed for Boundary Line Adjustment as recorded under Auditor's File number 200009250093, records of Skagit County, Washington;

thence South 45°29'47" East 40.29 feet to the East line of said Quit Claim Deed for Boundary Line Adjustment as recorded under Auditor's File Number 200009250093, records of Skagit County, Washington, at a point that is South 1°18'59" West 26.4 feet from said Northeast corner of the Quit Claim Deed for boundary Line Adjustment, said point being the terminus of said line.

Situated in Skagit County, Washington."

The requirement to obtain control over the property is implicit and is not included in the term as it appears in the AOP. And for simplicity, the requirement to maintain this area describes the boundary in general terms as including the area east of the rail spur and the northwest corner of the Fredonia Grange lot. In the event of a dispute in this description, the underlying requirement holds precedence and the survey information will be compared.

Control of the property was confirmed by SPI in correspondence, approved by NWCAA and Department of Ecology on 11/18/09.

Condition 8.1.2: Control of the property in Condition 2 and satisfaction of the recordkeeping requirements in Condition 10, this condition no longer applies.

Condition 10: Control of the property, including construction of a fence, was confirmed by SPI in correspondence, approved by NWCAA and Department of Ecology on 11/18/09.

Condition 12: Startup of boiler occurred 12/30/06 - initial compliance demonstration was due by 6/30/07 (180 days). Initial compliance with the boiler NO_X permit limit (below) was demonstrated on 6/13/07 using a certified NO_X CEMS (4/3/07 RATA). Results were in compliance with the permit terms at the time, including the current term *5.1.10:*

Boiler stack NO_X limits

NO_X emissions shall not exceed, on a daily average:

0.13 lb NO_X/MMBtu

56 lb NO_X/hr

Therefore, condition 12 is completed and not included in the AOP.

Condition 13: Startup of boiler occurred 12/30/06 - initial compliance demonstration was due by 6/30/07 (180 days). Initial compliance with the boiler CO permit limit (below) was demonstrated on 6/13/07 using Method 10 concurrently running a certified CO CEMS (4/3/07 RATA). Results were in compliance with the permit terms at the time, including the current term *5.1.12:*

Boiler stack CO limits

CO emissions shall not exceed;

- *0.35 lb CO/MMBtu, 1-hour average*

659 tons CO in any consecutive 12-month period (including startups and shutdowns).

Therefore, condition 13 is completed and not included in the AOP.

Condition 14: Startup of boiler occurred 12/30/06 - initial compliance demonstration was due by 6/30/07 (180 days). Initial compliance with the planer and boiler PM_{10} permit limits (below) were demonstrated on 4/5/07 and 6/13/07, respectively, both using Methods 5 and 202. Results were in compliance with the permit terms at the time, including the current terms *5.1.12 and 5.3.1:*

Boiler stack PM/PM_{10}/$PM_{2.5}$ limits (filterable + condensable) expressed as PM_{10} emissions shall not exceed:

0.02 lb PM_{10}/MMBtu 24-hour average, based on the heat input value of the fuel

37.7 tons PM_{10} in any consecutive 12-month period

Planer baghouse stack PM/PM_{10}/$PM_{2.5}$ limits (filterable + condensable) expressed as PM_{10} emissions shall not exceed:

0.005 gr PM_{10}/dscf 1-hour average

9.4 tons PM_{10} in any consecutive 12-month period

Therefore, condition 14 is completed and not included in the AOP.

Condition 15: Startup of boiler occurred 12/30/06 - initial compliance demonstration was due by 6/30/07 (180 days). Initial compliance with the boiler SO_2 permit limits (below) were demonstrated on 6/13/07 using Method 6c. Results were in compliance with the permit terms at the time, including the current terms *5.1.11:*

Boiler stack SO_2 limits

SO_2 emissions shall not exceed:

0.025 lb SO_2/MMBtu on a 3-hour average, based on the heat input value of the fuel

47.1 tons SO_2 over any consecutive 12-month period.

Therefore, condition 15 is completed and not included in the AOP.

Condition 16: Startup of boiler occurred 12/30/06 - initial compliance demonstration was due by 6/30/07 (180 days). Initial compliance with the boiler VOC permit limits (below) were demonstrated on 6/13/07 using Method 25a. Results were in compliance with the permit terms at the time, including the current term 5.1.15

Boiler stack VOC limits

Emissions calculated as propane (MW 44) shall not exceed:

- *0.019 lb VOC/MMBtu 1-hour average, based on the heat input value of the fuel*

35.8 tons VOC in any consecutive 12-month period

Other ongoing VOC requirements are included in terms 5.4.4, and 5.5.4 that are reflective of the initial requirements: Initial compliance with the kiln VOC condition (implementation of the computerized stem management system with an operating manual) was verified during the 2008 inspection. Initial compliance with the VOC limit in the spray chamber (implementing a mist eliminator and recycle system with an operating manual) was verified during the 2008 inspection.

Therefore, condition 16 is completed and not included in the AOP.

Condition 18 required SPI to install and begin operation of a $PM_{2.5}$ monitor at a location within the SPI plant boundary, approved by NWCAA and Ecology. The monitoring was to continue until there are not less than 10 days sampled in each of the months of October through March with a cumulative average dry kiln PM_{10} emission level greater than 27.5 lb/day. SPI requested, with a letter dated 5/23/2014, to discontinue the monitoring, since they had fulfilled the requirements of Condition 18. After reviewing supplemental data submitted by SPI via email on 6/6/2014, Ecology and NWCAA agreed to allow the termination of the ambient $PM_{2.5}$ monitoring and sent letters to that effect to SPI dated on 6/19/2014 and 7/2/2014, respectively.

Therefore, Condition 18 is not included in the AOP.

Condition 27 includes several initial notifications to be submitted to Ecology and the NWCAA. All the time frames have passed for these provisions and they are considered met by NWCAA at the time of permitting and therefore, are not included in the AOP.

Condition 27: SPI-Burlington will notify and report to Ecology and the NWCAA, and maintain related records as follows:

27.1 Notifications and reports will be in written format unless otherwise approved by Ecology. General conditions in Section 2 require hardcopy reports submitted to the agency.

27.2 The following notifications shall be submitted to Ecology and the NWCAA:

27.2.1 Commencement of construction of the mill and of the wood-fired cogeneration unit: No later than 30 calendar days after such date. Commencement of construction was notified to the NWCAA/Ecology in January 2006.

27.2.2 Initial startup of the mill and of the wood-fired cogeneration unit: No later than 15 calendar days after such date. Initial startup of the cogen and mill was notified to the NWCAA/Ecology in December 2006.

27.2.3 Completion of the entry into the operation and maintenance manual of the items specified in Condition 29, within 15 days after such entries were completed. The operation and maintenance manual was inspected and confirmed complete by NWCAA in 2008.

27.2.4 At the time of submittal of the notification required in Condition 27.2.3, certification by the responsible party for the facility that the relevant equipment was installed consistent with the parameters developed pursuant to Condition 29. All reports submitted to NWCAA/Ecology have been certified by the responsible official.

27.2.5 The date on which the NO_X CEMS first demonstrated satisfactory performance pursuant to Condition 26.1, no later than 30 calendar days after such date. The NO_X CEMs completed performance specifications demonstration in April 2007.

27.2.6 The date on which the CO CEMS first demonstrated satisfactory performance pursuant to Condition 26.2, no later than 30 calendar days after such date. The CO CEMS completed performance specifications demonstration in April 2007.

The remaining Sections 27.3 and 27.4 are included in the AOP.

Condition 28 requires that access and sampling ports compliant with Method 1 be constructed. The stack and ports are constructed.

Therefore, this term is completed and not included in the AOP.

Condition 29 requires O&M manuals and procedures be implemented for the facility. The O&M manuals were reviewed during the 2008 NWCAA inspection. The initial requirements have not been included in the AOP.

Conditions 30 and 31 have no ongoing compliance provisions and are similar to regulatory language in Section 2 of the AOP. They have not been included in the AOP.

Condition 32 indicates actions that would cause the approval to become invalid and are similar to regulatory language in Section 2 of the AOP. They have not been included in the AOP.

Condition 33 coordinates issuance with the permit with EPA Endangered Species Act the Magnuson-Stevens Fishery and Conservation Act.

These requirements have been met as noted in a Region 10 email from 7/16/09. They have not been included in the AOP.

Condition 34 addresses public comment and is similar to regulatory language in Section 2 of the AOP. The condition has not been included in the AOP.

7.5 OAC 1089

Conditions 5, 6, and 7 required SPI to do an initial stack test for NOx and CO. The test was conducted on 5/10/2012. Results for NOx were 1.08 lb/hr (limit of 1.7 lb/hr) and CO were 0.08 ppmvd at 3% oxygen (limit of 50 ppmvd at 3% oxygen). These conditions have been removed from OAC 1089a.

Condition 9 required SPI to submit a notification of the startup of the package boiler. This notification was received on 7/27/2012. According to the NWCAA database, the notification was due on 5/20/2012. This condition has been removed from OAC 1089a.

7.6 OAC 938c

Condition 11 required SPI to submit a notification of the date they received first alternative fuel, and the date they first burned that fuel in their boiler. According to an email from Curt Adcock of SPI to Erica Shuhler of NWCAA received on 6/18/2013, alternative fuel was first received by SPI on 6/12/2013 and it was burned in the boiler on 6/19/2013.

8 GENERAL PERMIT ADMINISTRATION AND ASSUMPTIONS

8.1 Permit Content

Applicable requirements that were satisfied by a single past action on the part of the source are not included in the AOP. An example of this would be performance testing to demonstrate compliance with applicable emission limitations as a requirement of initial startup (see Section 7). Also, regulations that require action by a regulatory agency, but not of the regulated source are not included as applicable permit conditions.

8.2 Federal Enforceability

Federally enforceable requirements are terms and conditions required under the Federal Clean Air Act (FCAA) or under any of its applicable requirements. Local and state regulations may become federally enforceable by formal approval and incorporation into the State Implementation Plan or through other delegation mechanisms. Federally enforceable requirements are enforceable by the EPA and citizens. All applicable requirements in the permit including standard terms and conditions, generally applicable requirements, and specifically applicable requirements are federally enforceable unless they are identified in the permit as enforceable only by the state. Two different versions (identified by the date) of the same regulatory citation may apply to the source if federal approval/delegation lags behind changes made to the Washington Administrative Code (WAC) or to the NWCAA Regulation. The citation for each applicable requirement in the permit includes a date, which is the effective date in the case of a WAC, or the approval date for NWCAA Regulation sections, or the Federal Register publication date for federal regulations.

Chapter 173-401 WAC is not federally enforceable although the requirements of this regulation are based on federal requirements for the air operating permit program. Upon issuance of the permit, the terms based on Chapter 173-401 WAC will become federally enforceable for SPI.

8.3 Future Requirements

Applicable requirements promulgated with future effective compliance dates may be included as applicable requirements in the permit. Some requirements that are not applicable until triggered by an action, such as the requirement to file an application prior to constructing a new source, are addressed within the standard terms and conditions section of the permit.

There are presently no pending applications to construct or modify SPI in such a way as to trigger New Source Review. SPI has certified in the permit renewal application that the facility will meet any future applicable requirements on a timely basis.

8.4 Compliance Options

SPI did not request emissions trading provisions or specify more than one operating scenario in the air operating permit application; therefore, the permit does not address these options as allowed under WAC 173-401-650. This permit does not condense overlapping applicable requirements (streamlining) nor does it provide any alternative emission limitations.

8.5 Gap Filling

Title V of the Federal Clean Air Act is the basis for the EPA's 40 CFR 70, which is the basis for the State of Washington air operating permit regulation, Chapter 173-401 WAC. Title V requires that all air pollution regulations applicable to the source be called out in the AOP for that source. Title V also requires that each applicable regulation be accompanied by a federally enforceable means of "reasonably assuring continuous compliance." Some of the older general regulations and federal NSPS do not have monitoring, recordkeeping and reporting requirements that are sufficient to reasonably assure continuous compliance with emission limitations. Title V, 40 CFR 70, and WAC 173-401-615 all contain a "gap-filling" provision for that situation[9]. The permitting agency is required to create monitoring, recordkeeping and reporting requirements that fill the gap and to put those requirements in the air operating permit. In any term where gap-filling has taken place, the regulatory citation for that term will contain will contain the words "directly enforceable." The introductory paragraphs for the table include the reference to the citation of the gap-filling requirement in Chapter 173-401 WAC: "WAC 173-401-615(b) & (c), 10/17/02."

On August 19, 2008, the U.S. Court of Appeals vacated EPA's 2006 interpretive rule that prohibited states from enhancing monitoring in Title V permits. As a result, permitting authorities again must ensure that monitoring in each permit is sufficient to assure compliance with the terms and conditions of the permit.

8.6 Inapplicable Requirements

WAC 173-401-640 requires the permitting authority to issue a determination regarding the applicability of requirements with which the source must comply. Table 6-1 of the AOP lists requirements that are deemed inapplicable to the facility. These inapplicable requirements must be listed in the AOP in order for the permit shield to apply. The basis for each determination of inapplicability is included in the table.

---

[9] WAC 173-401-615(1) Monitoring. Each permit shall contain the following requirements with respect to monitoring:

(a) All emissions monitoring and analysis procedures or test methods required under the applicable requirements, including any procedures and methods promulgated pursuant to sections 504(b) or 114 (a)(3) of the FCAA;

(b) Where the applicable requirement does not require periodic testing or instrumental or noninstrumental monitoring (which may consist of recordkeeping designed to serve as monitoring), periodic monitoring sufficient to yield reliable data from the relevant time period that are representative of the source's compliance with the permit, as reported pursuant to subsection (3) of this section. Such monitoring requirements shall assure use of terms, test methods, units, averaging periods, and other statistical conventions consistent with the applicable requirement. Recordkeeping provisions may be sufficient to meet the requirements of this paragraph; and

(c) As necessary, requirements concerning the use, maintenance, and, where appropriate, installation of monitoring equipment or methods.

9 PERMIT ELEMENTS AND BASIS FOR TERMS AND CONDITIONS

9.1 Permit Organization

The permit is organized in the following sequence:

- Permit Information
- Attest
- Table of Contents
- Emission Unit Identification
- Standard Terms and Conditions
- Generally Applicable Requirements
- Specific Requirements for Emissions Units
- Inapplicable Requirements

9.2 Section 1 – Permit Information, Attest, and Emissions Unit Description Sections

The General Information section identifies the source, the responsible corporate official, and the NWCAA personnel responsible for permit preparation, review, and issuance. The Attest section provides authorization by NWCAA for the source to operate under the terms and conditions contained in the AOP. The Emissions Unit Identification section lists the significant emissions units, associated control equipment, fuel type, and installation dates. This section is a general overview of the facility. Detailed information about the plant can be found in the permit application and supporting files.

9.3 Section 2 – Standard Terms and Conditions

The Standard Terms and Conditions section of the permit specifies administrative requirements or prohibitions with no ongoing compliance monitoring requirements. The legal authority for the Standard Terms and Conditions are provided in the citations in Section 2 of the permit. The description of the regulation in each of these conditions (with the exception of those labeled “Directly enforceable”) is sometimes a paraphrase of the actual regulatory requirement. Where there is a difference between the actual requirement and the paraphrased description, the cited regulatory requirement takes precedence. In an effort to make the section more readable, the terms and conditions have been grouped by function. In some cases, similar requirements at the state and local authority level have been grouped together.

Several permit conditions in Section 2 are labeled “Directly enforceable”. These conditions are a clarification of the regulatory requirements, as the NWCAA interprets those requirements. They are legal requirements with which the permittee must comply and are directly enforceable through the permit.

A number of requirements that would not be applicable until triggered have also been included in this section. An example of one such requirement is the requirement for a source to submit an application for new source review.

9.4 Section 3 – Standard Terms and Conditions for NSPS and NESHAP

9.4.1 NSPS

The applicable requirements of Subpart A of 40 CFR 60 are in this Section. Subpart A contains requirements that apply whenever a specific New Source Performance Standard applies. NSPS Subpart Db applies to the cogeneration unit, so Subpart A applies to that unit as well.

9.4.2 NESHAP

The applicable requirements of Subpart A of 40 CFR 63 are in this Section. Subpart A contains requirements that apply whenever a specific NESHAP Standard applies. 40 CFR 63 Subpart DDDDD applies to the cogeneration unit and the package boiler, so Subpart A applies to those units as well.

9.5 Section 4 – Generally Applicable Requirements

The Section 4 - Generally Applicable Requirements section of the AOP identifies requirements that apply broadly to the facility. These requirements are generally not called out in NOC approvals. Instead, they are found as general air pollution rules such as the NWCAA Regulation or the WAC.

For example, regulations addressing general air pollution sources in Washington are contained in WAC 173-400. NWCAA has also established regulations that apply locally. Several general provisions already included in the existing PSD permit continue to apply to the Facility and are included in this Section:

WAC 173-400-040 General Standards for Maximum Emissions (adopted by the NWCAA under Section 401.1).

NWCAA Regulation Section 451 Emission of Air Contaminant – Visual Standard

WAC 173-400-050 and NWCAA Regulation Section 455 identify emission standards for combustion and incineration units, and limit particulate matter emissions.

NWCAA Regulation Section 535 Odor Control Measures

NWCAA Regulation Section 550 Preventing Particulate Matter from Becoming Airborne

The first column of the Generally Applicable Requirements table in Section 4 includes the permit term, numbered 4.1, 4.2, etc. The second column is the legal citation and contains the enforceable requirement. If the requirement is not federally enforceable, it is specifically noted as "*State only"* along with the version date of the requirement. The third column is a paraphrase of the requirement, for descriptive purposes only, and is not intended to be a legal requirement. The last column contains the monitoring, recordkeeping and reporting (MR&R) requirements the source must perform to determine if it is maintaining on-going compliance with the corresponding requirement. Again, it is a paraphrase of the MR&R from the cited underlying requirement unless stated as "directly enforceable".

Many of the permit requirements do not need to be explained in this Statement of Basis because the legal and factual basis for the requirement is self-evident. Some of the terms, however, contain requirements that are not well defined or have MR&R for which the rationale is not readily apparent. For these, additional discussion is provided below.

9.5.1 Nuisance (odor) and Fugitive Emissions (Permit Terms 4.3 - 4.11):

NWCAA Regulation 530 is a state only requirement that prohibits the discharge of air contaminants that are likely to be injurious to health, property or which unreasonably

interfere with enjoyment of life and property. WAC 173-400-040(5) prohibits emissions detrimental to health and property. WAC 173-400-040(4) is a similar state requirement that requires "recognized good practice" to reduce odors to a reasonable minimum.

NWCAA Regulation 550 is a federally enforceable requirement that requires reasonably available control technology (RACT) for all fugitive dust emissions. WAC 173-400-040(3) addresses fugitive dust emissions for some activities and WAC 173-400-040(8) requires reasonable precautions or reasonably available control technology (RACT) to control fugitive emissions. Both of the Ecology regulations are federally enforceable. Recording of fugitive dust emissions is not necessarily a violation of the requirement, since the requirement does not prohibit fugitive dust emissions, but prohibits fugitive dust unless RACT is employed. RACT is employed for all sources of dust at this plant. Equipment controlled or vented directly through a stack is incapable of violating this standard while complying with the other requirements in the permit. WAC 173-400-040(2) is a state only regulation that prohibits emissions of particulate matter which becomes deposited upon the property of others in sufficient quantities and of such characteristics and duration as is, or is likely to be, injurious to human health, plant or animal life, or property, or which unreasonably interferes with enjoyment of life and property.

The monitoring method specifies monthly facility inspections to monitor for nuisance and fugitive emissions with SPI taking corrective action within 24 hours, if any nuisance or fugitive dust emissions are noted. In addition to the periodic inspections described above, SPI is also required to actively respond to citizen complaints. Records must be kept of periodic inspections, any complaints, problems found, and corrective actions taken.

Term 4.19 comes from Condition 1 of OAC 938c, and requires fugitive emissions to be controlled such that no visible emissions are detected at any point beyond the plant property line as measured by Reference Method 22.

9.5.2 Particulate Matter (Permit Terms 4.13 - 4.14):

The cogeneration facility and the sawmill baghouse exhaust stacks and the kilns are the only likely point sources of particulate matter emissions in the SPI facility. The MR&R requires SPI to periodically inspect the entire facility for visible emissions that would indicate PM emissions. If visible emissions are found, SPI is to take corrective action and to document the incident.

9.5.3 Sulfur Dioxide and Fuel bound Sulfur (Permit Terms 4.15 - 4.17)

Below is a discussion on each of the generally applicable terms related to SO_2.

9.5.3.1 Fuel Sulfur Content (Permit Term 4.16):

Natural gas is used on a limited basis in the cogeneration unit. NWCAA 520 limits sulfur content of gaseous fuels to a maximum of 412 ppm sulfur, which is about 24 grains of sulfur per 100 standard cubic feet. Natural gas is supplied via pipeline by Cascade Natural Gas and typically contains less than 2 grains of sulfur per 100 standard cubic feet:

$$\frac{2\,gr.\ Sulfur}{100\,ft^3} \times \frac{1\,lb}{7000\,gr} \times \frac{1lb-mole}{32lb} \times \frac{385\,ft^3}{1lb-mole} \times 10^6 = 34\,ppm$$

Note:

A "lb-mole" of a pure gas weighs the molecular weight of that gas in pounds and occupies 385 ft^3 at 32° F and 1 atmosphere pressure. A "lb-mole" of sulfur (S) weighs 32 lb and reacts with a lb-mole of oxygen (O_2) which also weighs 32 lb to form a lb-mole of sulfur dioxide, which weighs

> 64 lb. Therefore, 2 lb of SO_2 are emitted for every lb of sulfur in the fuel. Because one lb-mole of sulfur reacts to form one lb-mole of sulfur dioxide, each cubic foot of sulfur in the fuel results in one cubic foot of sulfur dioxide out the stack.

SPI demonstrates compliance with this requirement by burning natural gas, which is inherently low in sulfur, as required in Term 4.5. No oil is burned in any of the equipment at SPI.

9.5.3.2 Sulfur Dioxide, Stack Emissions (Permit Terms 4.17 - 4.18):

Northwest Clean Air Agency Regulations 462 and 410 and WAC 173-400-040(6) have been grouped together under Permit Terms 4.16 through 4.18 since they are equivalent requirements (SO_2 emissions not to exceed 1,000 parts per million on a dry, volumetric basis[10] (ppm)) and have the same monitoring requirements.

The second paragraph of WAC 173-400-040(6), which is not in the Northwest Clean Air Agency regulations and is not adopted into the SIP, allows for exceptions to this requirement if the source can demonstrate that there is no feasible method of reducing the SO_2 concentrations to 1,000 ppm. This requirement is not federally enforceable and is not an applicable requirement for sources regulated by the Northwest Clean Air Agency.

The cogeneration unit burns only wood, which contains virtually no sulfur, burning natural gas only on startup and occasionally as required to maintain stable combustion. The following calculation shows that it is mathematically impossible for a unit to emit 1,000 ppm sulfur dioxide while burning natural gas.

According to *Perry's Chemical Engineer's Handbook*, each cubic foot of natural gas requires approximately 10 cubic feet of air for combustion, yielding approximately 11 cubic feet of combustion exhaust gases, consisting mostly of nitrogen, water vapor, and carbon dioxide. The sulfur in the natural gas will almost all be converted to sulfur dioxide, with each cubic foot of sulfur producing the same volume of sulfur dioxide. Since each cubic foot of natural gas contains 1.306×10^{-5} cubic foot of sulfur, each cubic foot of stack exhaust will contain approximately:

$$1.306\times10^{-5}\frac{ft^3\,S}{ft^3\,nat.gas}\times\frac{1\,ft^3\,SO_2}{1\,ft^3\,S}\times\frac{1\,ft^3\,nat.gas}{11\,ft^3\,stack\,exhaust}=1.188\times10^{-6}\frac{ft^3\,SO_2}{ft^3\,stack\,exhaust}$$

This is equivalent to 1.19 ppmvd SO_2. Note that this estimated value is about one-tenth of one percent of the 1,000 ppm SO_2 standard. Therefore, it is reasonable to assume that combustion units that are fired on natural gas cannot exceed the 1,000 ppm SO_2 limits in Northwest Clean Air Agency Regulations 462 and 410 and WAC 173-400-040(6).

9.6 Section 5 – Specific Requirements for Emissions Units

This section lists requirements that apply to the specific emission units, such as the cogeneration unit, the planer mill, dry kilns, etc. All of the general requirements from

---

[10] "ppm" means "parts per million. Sometimes this is written as "ppmvd" meaning ppm on a volumetric, dry, basis, to distinguish ppm on a weight basis. Stack gas is usually sampled through a probe placed somewhere in the middle of the stack cross-section. The moisture is removed from the gas stream as part of the sampling process. The stack gas sample is analyzed for the pollutant in question, with the lab results being calculated as cubic feet (or meters) of pollutant per million cubic feet (or meters) of dry stack gas. If you had a stack with 50% moisture that was running right at the 1,000 ppm SO_2 standard, you would have 1,000 cubic feet of SO_2 for every million cubic feet of dry stack gas. You would also have 1,000 cubic feet of SO_2 for every *two* million cubic feet of "wet" (as is) stack gas, which is 500 ppm. This is why it is important to know how stack sampling is done and why stack sampling and continuous emission monitoring methods are so specific.

Sections 2 and 4 apply as well. Section 3 applies in the case of any emission unit that has an applicable New Source Performance Standard or National Emissions Standard for Hazardous Air Pollutants. The format and organization of this section is the same as the table for the generally applicable requirements in Section 4.

10 CAM PLANS - ESP

COMPLIANCE ASSURANCE MONITORING PLAN
SIERRA PACIFIC INDUSTRIES, BURLINGTON DIVISION
ELECTROSTATIC PRECIPITATOR

I. Background

A. Emissions Unit

Description:	McBurney Biomass Fired, Water wall boiler with natural gas as secondary fuel.
Identification:	McBurney Boiler
NWCAA ID:	EU-1 Cogeneration Facility
Facility:	Sierra Pacific Industries – Burlington Division Mount Vernon, Washington

B. Applicable Regulation, Emissions Limit, and Monitoring Requirements

Regulation:	NWCAA	AOP 019 OAC 938C
	PSD 05-04 Amendment 2 40 CFR Part 60 Subpart Db 40 CFR Part 63 – NESHAP, Major Sources	
Emissions Limits:		
PM_{10}	0.02 lb/mmbtu (24-hour average) [PSD]	
PM_{10}	37.7 tpy (any consecutive 12-month period) [PSD]	
PM*	0.085 lb/mmbtu [40 CFR 60]	
PM*	0.037 lb/mmbtu [40 CFR 63]	
Current monitoring requirements:	Maintain and operate continuous opacity monitoring system (COMS) and perform annual performance stack testing.	

C. Control Technology: Mechanical collector followed by a 4-Zone Electrostatic Precipitator

II. Monitoring Approach

The key elements of the monitoring approach, include the indicators to be monitored, indicator ranges, and performance criteria are presented in Table 1 and Table 2.

TABLE 1. OPACITY MONITORING APPROACH

I. Indicator	Opacity is used as an indicator of ESP performance.
Measurement Approach	A continuous opacity monitor (COM) provides continuous information to boiler operators to confirm proper operation of the ESP.
II. Indicator Range	Any of the following shall be considered an excursion of the ESP: • Exceeding 20% opacity for a period or periods aggregating more than 3 minutes in any 1 hour as measured by a COMS; • Exceeding 5% opacity (1-hour average) as measured by a continuous opacity monitoring system (COMS), except for periods of soot-blowing; • Exceeding 10% opacity (aggregated 3 minutes in any 1 hour) as measured by WA DOE Method 9A. • Exceeding 20% opacity for a period or periods aggregating more than 6 minutes in any 1 hour as monitored by Method 9. Note: Soot-blowing shall occur as a regularly scheduled event and shall not exceed 1 hour per 8-hour shift. Soot-blowing shall not cause the boiler stack to exceed 10% opacity (1-hour average) as measured by COMS. Deviations from the regular soot-blowing schedule that result in excess emissions shall trigger agency notification.
III. Performance Criteria A. Data Representativeness	More than 20 years of operating experience with a COM have demonstrated that opacity is an excellent indicator of ESP performance.
B. Verification of Operational Status	Hourly recording of T/R voltages and displays in boiler control room confirm operational status.
C. QA/QC Practices and Criteria	Confirm the meters read zero when the unit is not operating. The COM is checked quarterly and calibrated as appropriate.
D. Monitoring Frequency	Continuous monitoring by COM. Frequent visual observations of stack opacity by non-certified plant personnel.
Data Collection Procedures	COM observations are continuously recorded.
Averaging period	Varies based on permit requirements indicated above (3 min and 6 min).

TABLE 2. ESP MONITORING APPROACH

I. Indicator	Secondary voltage (to transformer/rectifier [T/R]) is measured for each field to ensure that proper conditions exist in each field for particulate matter collection.
Measurement Approach	The secondary voltage to each T/R is monitored hourly and recorded to confirm proper operation of the ESP. High and low voltage alarms for the operators are present in the control room.
II. Indicator Range	An excursion is defined as when the Kilovolts to two or more of the transformer rectifier (T/R) sets are **above 55kv <u>or</u> less than 10kv.** Excursions trigger an inspection, corrective action, and a reporting requirement.
III. Performance Criteria A. Data Representativeness	The voltages are measured using the instrumentation the manufacturer provided with the ESP. The maximum and minimum allowable T/R voltages are based on manufacturer recommended values. Shut-off alarm to the unit is set at 5kv to avoid unnecessary shut-down of the unit between 5 and the lower range of excursion.
B. Verification of Operational Status	Continuous recording of T/R voltages and displays in boiler control room confirm operational status.
C. QA/QC Practices and Criteria	Confirm the meters read zero when the unit is not operating. Follow O&M manual for ESP.
D. Monitoring Frequency	Continuous monitoring by alarm and hourly recording of T/R voltages.
Data Collection Procedures	Continuous monitoring by alarm and hourly recording of T/R voltages.

MONITORING APPROACH JUSTIFICATION

I. Background

The pollutant-specific emission unit is a 4-field ESP controlling a biomass-fired, water wall boiler. The boiler is rated at 250,000 pounds of steam per hour. The boiler subject to New Source Performance Standard (NSPS) Subpart Db. The boiler normally is operated at full capacity, and most emission tests have been performed at or near full load. The boiler is not a "large" CAM source (the post-control PM emissions are less than 100 tons per year) so continuous monitoring is not required. However, a Continuous Opacity Monitor (COM) was required as a condition of its operating permit and for compliance purposes with the NSPS Subpart Db.

A two-stage control system ensures compliance with permit limits for particulate matter (PM) mass emissions limits. Large particles are removed in a mechanical collector (a "multiclone" cyclone separator). This initial stage of particle control removes about 70 percent of the particulate matter mass emissions. These larger particles and char are typically re-injected into the boiler to improve fuel efficiency and to reduce ash generation. An induced draft fan pulls flue gas through the multiclone and into four-field ESP designed by PPC Industries. The maximum power consumption of the ESP is 204 kW. The combined PM control (multiclone and ESP) is estimated at 97.5% efficiency.

After passing through the ESP, boiler exhaust gases are emitted from an 82 foot tall, 8'-3" diameter stack. Stack sampling test ports and an opacity monitor are located about three quarters of the way up the stack.

The facility's Air Operating Permit identifies a variety of monitoring and record-keeping requirements. It also requires the development and use of an Operations and Maintenance Plan for both the multi-clone and the ESP.

II. Rationale for Selection of Performance Indicators

Although the performance of an ESP can be assured by providing sufficient power to each field, SPI has never conducted tests that reveal the minimum power requirements needed to ensure compliance with the mass emission limit. As noted below, recent source tests have demonstrated that the facility meets its PM emission limit and its opacity limit, but neither test evaluated mass emissions as a function of power input to the ESP. Indicators in the control room identify problems with the ESP electrical systems and with opacity excursions, but there is no absolute means of quantifying PM mass emissions in real time.

In an ESP, electric fields are established by applying a direct-current voltage across a pair of electrodes, a discharge electrode and a collection electrode. Particulate matter suspended in the gas stream is electrically charged by passing through the electric field around each discharge electrode (the negatively charged electrode). The negatively charged particles then migrate toward the positively charged collection electrodes. The particulate matter is separated from the gas stream by retention on the collection electrode. Particulate is removed from the collection plates by shaking or rapping the plates.

As a general rule, ESP performance improves as total power input increases. This relationship is true when particulate matter and gas stream properties (such as PM concentration, size distribution, resistivity, and gas flow rate) remain stable and all equipment components (such as rappers, plates,

wires, hoppers, and transformer-rectifiers) operate satisfactorily. The secondary voltage decreases when a malfunction, such as grounded electrodes, occurs in the ESP. When the secondary voltage drops, less particulate is charged and collected. Monitoring the secondary voltage helps ensure that proper conditions exist in each field for particulate collection.

SPI believes that opacity is a better indicator of ESP performance and mass emissions than measuring ESP parameters. Problems that would be detected by anomalies in power input will also be manifested in the opacity observations. Monitoring the voltages to the T/R sets will help track ESP performance, while the control room alarms will help identify potential operational problems with the ESP fields.

III. Rationale for Selection of Indicator Ranges

An ESP excursion is defined as two or more of the ESP T/R sets have voltages that are outside the acceptable voltage range (above minimum acceptable voltage and below maximum acceptable voltage) as shown in Table 2. When an excursion occurs, corrective action will be initiated, beginning with an evaluation of the occurrence to determine the action required to correct the situation. All excursions will be documented and reported.

If the COM is not functioning, plant personnel will evaluate opacity visually once per shift. If there is a visible plume not attributable to water, plant personnel will consider that an excursion. When an excursion occurs, corrective action will be initiated, beginning with an evaluation of the occurrence to determine the action required to correct the situation. All opacity excursions will be documented and reported.

The opacity criterion was selected based upon the current permit limit for opacity.

11 CAM PLANS – BAGHOUSE

COMPLIANCE ASSURANCE MONITORING PLAN:
BAGHOUSE FOR PM CONTROL

I. Background

A. Emissions Unit

Description:	Planer Baghouse
Identification:	EU-3, Superior Systems Baghouse
Facility:	Sierra Pacific Industries – Burlington Division Mount Vernon, WA

B. Applicable Regulation, Emission Limit, and Pre-CAM Monitoring Requirements

Regulation:	NWCAA	OAP 019
		OAC 938c
	PSD 05-04 Amendment 2	
	40 CFR 60, App A	

Emission limits:	PM_{10}	0.005 gr/dscf (1-hr average)
	PM_{10}	9.4 tons (any consecutive 12-month period)
	Opacity	Cannot exceed 10% (EPA Method 9)

C. Control Technology, Capture System

Controls:	Pressurized fabric filter baghouse.
Capture System:	Closed-duct system
Bypass:	Fan shuts off if abort gate is tripped and baghouse is bypassed. Operation of the fan indicates that the baghouse is not being bypassed.

II. Monitoring Approach

The key elements of the monitoring approach are presented in the attached table. Normal process operations will not produce conditions that adversely affect the baghouse without affecting pressure drop; therefore, no process operational parameters will be monitored.

III. Response to Excursion

Excursion of pressure drop ranges will trigger an inspection of the baghouse and operations to slow down production as feasible. Appropriate personnel will inspect the baghouse within 4 hours of receiving notification and make needed repairs as soon as practicable. Operation will return to normal upon completed corrective action.

MONITORING APPROACH

	Indicator No. 1	Indicator No. 2	Indicator No. 3
I. Indicator	Pressure drop	Inspection/maintenance	Reference Method Testing
Measurement Approach	Pressure drop through the baghouse is measured continuously using a differential pressure gauge.	Inspection according to I/M checklist; maintenance performed as needed.	Emissions testing using Methods 1-4 and 5.
II. Indicator Range	Typical operation is 1.0 to 3.5 inches H_2O. Less than 1 or more than 5 inches H_2O triggers investigation.	NA	Particulate matter ≤0.005 gr/dscf
III. Performance Criteria A. Data Representativeness	Pressure drop across the baghouse is measured at the baghouse inlet and exhaust. The minimum accuracy of the device is ±0.5 in. H_2O.	Inspections are performed at the baghouse.	Test sampling done at the exhaust of the baghouse.
B. Verification of Operational Status	NA	NA	NA
C. QA/QC Practices and Criteria	Pressure taps checked daily for plugging.	Qualified personnel perform inspection.	Use reference method protocols.
D. Monitoring Frequency	Pressure drop is measured continuously.	Daily inspection.	Once every 5 years.
Data Collection Procedures	Pressure drop is recorded daily.	Records are maintained to document daily inspections and any required maintenance.	As required by Methods 1-4 and 5.
Averaging period	None	NA	Average of three 2-hour testing periods

JUSTIFICATION

I. Background

SPI operates a lumber facility at Mount Vernon, Washington. As part of that facility, trimming and planning of dried and green lumber results in generation of particulate matter that is collected by a high efficiency cyclone and baghouse.

The baghouse, produced by Superior Systems is fitted with polyester bags cleaned by reverse air. Air flow is induced by a fan with a 300 hp electric motor.

The facility is subject to a federal Title V permit due to potential to emit (uncontrolled) emissions more than 100 tons/year for PM-10.

II. Rationale for Selection of Performance Indicators

The pressure drop through the baghouse is monitored as shown on the attached O&M procedures for the unit. An increase in pressure drop can indicate that the cleaning cycle is not frequent enough, cleaning equipment is damaged, or the bags are becoming blinded. Decreases in pressure drop may indicate significant holes and tears or missing bags.

Implementation of a baghouse inspection and maintenance (I/M) program provides assurance that the baghouse is in good repair and operating properly. A summary of the facility current Baghouse Operation & Maintenance Procedures is attached.

III. Rationale for Selection of Indicator Ranges

The selected excursion level for the baghouse is pressure drop less than 1 or greater than 7 inches of water based on manufacturer recommendations.

Operations & Maintenance Procedures

Superior Systems Baghouse – SPI Burlington Division

The Superior Systems Baghouse will be operated and maintained according to the Owner's manual supplied by the manufacturer.

FREQUENCY	DESCRIPTION
Daily (when in operation)	- Check and record magnehelic gauge reading. Magnehelic should be between 1 and 7. - Check for discharge out of the bottom of the baghouse. - Visually check for exhaust emission. Information will be recorded on a spreadsheet (Bag House Daily Check) and printed and filed onsite. Any issues needing attention will be brought to the Maintenance Superintendents attention to be corrected. Correction will be noted on the spreadsheet.
Weekly	- Check bearings for excessive vibration or heat. - Record magnehelic and purge pressure. Compare readings with previous weeks. Purge pressure should be between 7 and 11 psi. - Check lubricator and filter on airline to purge control panel. - Visually check purge arm for alignment during purge cycle. Information will be recorded on the "Bag House Weekly Inspection" form. Items needing attention will be documented on the for, along with completion dates. Completed forms will be given to the Safety/Environmental Coordinator to be filed.
Monthly	- Visually inspect pneumatic actuator and ratchet assembly for wear. - Grease bearings. - Change purge pump oil (Every 1500 hours of operation).
Bi-Annually (June and December)	- Grease ratchet assembly - Visually inspect bags

12 INSIGNIFICANT EMISSIONS UNITS

Some categorically exempt insignificant emission units as defined in the WAC 173-401-532 are present at SPI and are listed in this Statement of Basis (Table 6.1 below) rather than in the AOP. Emission units at SPI that have been determined to be insignificant on the basis of size or production rate as defined in WAC 173-401-530 and WAC 173-401-533 are listed in Table 12-1 below:

Table 12-1 Insignificant Activities and Emissions Units (Categorically Exempt)

Insignificant Emission Unit	Basis
Lubricating Oil Tank	WAC 173-401-532(3)
Hydraulic Oil Tank	WAC 173-401-532(4)
Pressurized Storage of Gases	WAC 173-401-532(5)
Vehicle Exhaust from Maintenance Shops	WAC 173-401-532(7)
CEMS	WAC 173-401-532(8)
Vents	WAC 173-401-532(9)
Vehicle Internal Combustion Engines	WAC 173-401-532(10)
Welding Operations	WAC 173-401-532(12)
Plant Upkeep Activities	WAC 173-401-532(33)
Street/Pavement Cleaning and Sweeping	WAC 173-401-532(35)
Food Preparation	WAC 173-401-532(41)
Portable Drums and Totes	WAC 173-401-532(42)
Lawn and Landscaping Activities	WAC 173-401-532(43)
General Vehicle Maintenance	WAC 173-401-532(45)
Comfort Air Conditioning	WAC 173-401-532(46)
Office Activities	WAC 173-401-532(49)
Sampling Connections	WAC 173-401-532(51)
Parking Lot Exhaust	WAC 173-401-532(54)
Indoor Activities	WAC 173-401-532(55)
Repair and Maintenance	WAC 173-401-532(74)
Totally Enclosed Conveyors	WAC 173-401-532(86)
Air Compressors	WAC 173-401-532(88)
Steam Leaks	WAC 173-401-532(89)
Vacuum System Exhausts	WAC 173-401-532(108)
Water Cooling Towers	WAC 173-401-532(121)

13 DEFINITIONS AND ACRONYMS

Definitions are assumed to be those found in the underlying regulation. A short list of definitions has been included to cover those not previously defined.

An "applicable requirement" is a provision, standard, condition or requirement in any of the listed regulations or statutes as it applies to an emission unit or facility at a stationary source.

"Ecology" means the Washington State Department of Ecology.

An "emission unit" is any part or activity of a stationary source that emits or has the potential to emit any regulated air pollutant.

"SPI" means Sierra Pacific Industries

"Oil" means low sulfur No. 2 diesel fuel, containing no more than 0.05 percent sulfur by weight.

A "permit" means for the purposes of the air operating permit program an air operating permit issued pursuant to Title 5 of the 1990 Federal Clean Air Act Amendments.

"State" means for the purposes of the air operating permit program NWCAA or the Washington State Department of Ecology.

The following is a list of Acronyms used in the Air Operating Permit and/or Statement of Basis:

acfm actual cubic feet per minute

AOP air operating permit

ASIL acceptable source impact level

bf board-feet of lumber

CEM continuous emissions monitor

CEMS continuous emissions monitoring system

CFR Code of Federal Regulations

CO carbon monoxide

EPA The United States Environmental Protection Agency

ESP electrostatic precipitator

EU emission unit

FCAA Federal Clean Air Act

gpm gallons per minute

gr grain (measurement of mass)

HAP hazardous air pollutant

HCl hydrochloric acid

lb/hr pound per hour

lb/MMBtu pound per million British thermal unit

Mbf thousand board feet of lumber

mg/L milligram per liter

MMbf million board feet of lumber

MMBtu million British thermal units

MR&R Monitoring, Recordkeeping and Reporting

MW megawatt

NESHAP National Emission Standards for Hazardous Air Pollutants

NOC Notice of Construction

NO_X oxides of nitrogen

NSPS New Source Performance Standard

NSR New Source Review

NWCAA Northwest Clean Air Agency

O_2 Oxygen

OAC Order of Approval to Construct

ODEQ Oregon Department of Environmental Quality

OSU Oregon State University

PM particulate matter

PM_{10} particulate matter less than 10 microns in diameter

$PM_{2.5}$ particulate matter less than 2.5 microns in diameter

ppm parts per million

ppmvd (same as ppmdv) parts of pollutant per million parts of dry stack gas on a volumetric basis

PSD Prevention of Significant Deterioration (federally required program for pre-construction review of sources)

QA/QC quality assurance/quality control

RCW Revised Code of Washington

scf standard cubic foot (cubic foot of gas at Standard Conditions)

SIP State Implementation Plan

SNCR selective non-catalytic reduction

SO_2 sulfur dioxide

TDS total dissolved solids

TPY tons per year

VOC volatile organic compounds

WAC Washington Administration Code

14 PUBLIC DOCKET

Copies of SPI's air operating permit and permit application and any technical support documents are available at the following at www.nwcleanair.org and the following location:

Northwest Clean Air Agency
1600 South Second Street
Mount Vernon, WA 98273-5202