Statement of Basis for the Air Operating Permit - FINAL

Tesoro Refining and Marketing

Anacortes, Washington

January 26, 2010

northwest Clean Air agency

Serving Island, Skagit & Whatcom Counties

AIR OPERATING PERMIT
PERMIT INFORMATION PAGE

Tesoro Refining and Marketing Company

10200 West March Point Road, Anacortes, WA 98221

SIC: 2911 NAICS: 324110 **NWCAA ID NUMBER: 006-V-S**
EPA AFS NUMBER: 53-057-00005

Responsible Corporate Official

Don J. Sorensen
Refinery Manager
(360) 293-9122

Corporate Inspection Contact

Rebecca Spurling
Environmental Superintendent
(360) 293-1664

Northwest Clean Air Agency

1600 South Second Street
Mount Vernon, Washington 98273-5202
(360) 428-1617

Prepared By

Theresa (Toby) Allen, PE
Air Quality Engineer
(360) 428-1617 x 209

Air Operating Permit Number:	**Issuance Date:**
013 R1	January 26, 2010
Permit Modifications:	**Modification Date:**
Supersedes Permit Number:	**Expiration Date:**
013	January 26, 2015
Application Date:	**Renewal Application Due:**
May 18, 2007	January 26, 2014

TABLE OF CONTENTS

1. Introduction 6

2. Facility Description 7
- 2.1 Primary Crude Oil Processing 9
- 2.2 Hydroprocessing 11
- 2.3 Benzene Saturation (BenSat) Unit 14
- 2.4 Catalytic Cracking, Product Fractionation, And Treating 15
- 2.5 Alkylation 18
- 2.6 Butane Isomerization 19
- 2.7 Storage, Blending, And Transfer Operations 20
- 2.8 Boiler/Utilities Plant 21
- 2.9 Flares 22
- 2.10 Effluent Treatment Plant 23

3. Compliance History 25

4. Orders of Approval to Construct and Regulatory Orders 30
- 4.1 Obsolete Orders 30
- 4.2 Effective Orders 34

5. Emissions 40
- 5.1 Criteria Pollutants in tons per year 40
- 5.2 Toxic Pollutants in pounds per year 40
- 5.3 Greenhouse gas estimates in tons per year 42

6. Federal Requirements 43
- 6.1 New Source Performance Standards (NSPS) 43
- 6.2 National Emission Standards for Hazardous Air Pollutants (NESHAPS) 48

7. Facility-wide program descriptions 59
- 7.1 Leak Detection and Repair (LDAR) 59
- 7.2 Wastewater Collection and Treatment 61
- 7.3 Storage Tanks 62

8. General Permit Assumptions 63
- 8.1 Federal Enforceability 63
- 8.2 Future Requirements 63
- 8.3 Compliance Options 63
- 8.4 GAP Filling 63
- 8.5 Compliance Assurance Monitoring (CAM) Plans 64

9. Permit Elements and Basis for Terms and Conditions 65
- 9.1 Information Page, Attest, and Emissions Unit Descriptions 65
- 9.2 Emission Unit Descriptions 65
- 9.3 Standard Terms and Conditions 65

9.4 Standard Terms and Conditions for New Source Performance Standards and National Emission Standards for Hazardous Air Pollutant Requirements 66
9.5 Generally Applicable Requirements 66
9.6 Specifically Applicable Requirements 68
9.7 Common Requirements 68
9.8 Alternative Monitoring Plan for monitoring SO_X from propane combustion unit F-753 68
9.9 Inapplicable Requirements 69
9.10 Insignificant Emission Units and Activities 69
9.11 Alternative Operating Scenarios 72

10. Public Docket 73

11. Summary of changes in the renewal 1 74
11.1 Changes throughout the AOP 74
11.2 Front page 74
11.3 Information page 74
11.4 Attest page 74
11.5 Table of Contents 74
11.6 SECTION 1: Emission Unit Descriptions 74
11.7 SECTION 2: Standard Terms and Conditions 75
11.8 SECTION 3 Standard Terms and Conditions for NSPS and NESHAP 76
11.9 SECTION 4 Generally Applicable Requirements 76
11.10 SECTION 5 Specifically Applicable Requirements 76
11.11 SECTION 6 Common Requirements 78
11.12 SECTION 7 Alternative Monitoring Plans 79
11.13 Compliance Schedule WAC 173-401-630(3) and WAC 173-401-520(2)(h)(iii) 79
11.14 SECTION 8 Inapplicable Requirements 79

12. Definitions and Acronyms 80

ILLUSTRATIONS

Figures

Figure 1-1 Arial View of Tesoro Refinery 6
Figure 2-1 General Refinery Process Flow Diagram 8
Figure 2-2 Crude Distillation Unit 9
Figure 2-3 Vacuum Flasher and ROSE Unit 10
Figure 2-4 Fuel oil, asphalt, and fuel gas blending systems 11
Figure 2-5 Catalytic Reformer 12
Figure 2-6 Naphtha Hydrotreater & Cat Gas Splitter 13
Figure 2-7 Clean Fuels Hydrotreater, Diesel Hydrotreater, & Jet Fuel Treater 14
Figure 2-8 Benzene Saturation Unit 15
Figure 2-9 Catalytic Cracking Unit and Sour Water Stripper 16
Figure 2-10 Gas Recovery Unit 17

Figure 2-11 Treating **18**
Figure 2-12 Alkylation Unit **19**
Figure 2-13 Butane Isomerization **20**
Figure 2-14 Storage, Blending and Transfer **21**
Figure 2-15 Boiler Feed Water **22**
Figure 2-16 Refinery fuel oil **22**
Figure 2-17 Flare System **23**
Figure 2-18 Effluent Treatment Plant **24**

Tables

Table 3-1 Notices of Violation and Written Warnings after January 1, 1998 ..... **25**
Table 6-1 NSPS Subpart Kb applicable tanks **44**
Table 6-2 Process Unit Applicability of Part 60 Subpart QQQ & Part 63 Subpart CC **47**
Table 6-3 Facility Tank List and Part 63 Subpart CC Applicability **51**
Table 6-4 Part 63 Process Vent Descriptions **54**
Table 6-5 Part 63 Group 1 Wastewater Streams **55**
Table 7-1 Leak Detection and Repair Program Summary **60**
Table 9-1 Insignificant Activities **69**
Table 11-1 Active Orders of Approval to Construct (OAC) **77**
Table 11-2 Permits Excluded from the AOP **78**

1. INTRODUCTION

The Tesoro Refining and Marketing Company (referred to herein as "Tesoro") owns and operates a petroleum refinery near Anacortes, Washington located at the northern end of March's Point. The Anacortes refinery manufactures petroleum fuels and asphalt. The refinery receives crude oil, catalytic cracking unit feed, and other petroleum derivatives and materials, and ships finished petroleum products, feed stocks, byproducts, intermediates, and wastes via various forms of transportation.

The facility was constructed in the mid-to late 1950's as Shell Oil Company Anacortes Refinery. The first unit was placed on stream in 1955. The Tesoro Petroleum Corporation purchased the Anacortes refinery in August 1998 from Shell.

The refinery is a designated major source for the air operating permit program because the facility has the potential to emit more than 100 tons of carbon monoxide (CO), nitrogen oxides (NO_X), sulfur oxides (SO_X), particulate matter less than ten microns in size (PM_{10}), volatile organic compounds (VOCs), and more than 25 tons per year of combined Hazardous Air Pollutants (HAP) and more than 10 tons per year of a single HAP. These air pollutants are defined as regulated air pollutants in Chapter 173-401 of the Washington Administrative Code (WAC).

The purpose of this Statement of Basis is to set forth the legal and factual basis for the Tesoro Refining and Marketing Company Air Operating Permit (AOP) conditions and to provide background information to facilitate review of the permit by interested parties.

This Statement of Basis is not a legally enforceable document.

Figure 1-1 Arial View of Tesoro Refinery

The renewed air operating permit has been changed from the original air operating permit. New Orders of Approval to Construct have been incorporated into the AOP. Federal requirements that became applicable after the first three years of the original permit term have been incorporated. Regulatory citations have been updated. These changes are discussed in detail in Section 11 of this document.

2. FACILITY DESCRIPTION

The Tesoro refinery purchases crude oil on the open market for processing into a variety of petroleum products. Current refinery crude oil throughput ranges from 115,000 to 123,000 barrels per day of gross crude feed, which includes a crude oil recycle stream. The crude oil is fed to the crude distillation unit (CU), which separates the material into fractions according to boiling point range. The fractions are sent to other refinery process units including the fluidized catalytic cracking unit (CCU) for additional processing, to blending units to produce refinery fuels and to storage prior to shipment and/or sales. The facility does not have a coker unit. A general refinery process flow diagram is attached as Figure 2-1. Please note that at the time of permitting, the benzene saturation (BenSat) unit had undergone permitting, but had not been constructed. Therefore the BenSat unit does not appear on Figure 2-1.

For the purposes of this Statement of Basis, refinery processes have been grouped into logical areas either by process unit interrelationships or geographical areas. To help the reader understand the facility's processes, this section includes a brief process description and process flow diagrams for each group or process unit within a group. The process groups are as follows:

Primary Crude Oil Processing

Hydroprocessing

Benzene Saturation (proposed)

Catalytic Cracking, Product Fractionation, and Treating

Alkylation

Butane Isomerization

Storage, Blending, and Transfer Operations

Boiler/Utilities Plant

Flares

Effluent Treatment Plant

Some emission sources located at the facility are categorized as insignificant due to their meeting the criteria listed in Washington Administrative Code (WAC) 173-401-530, -532, or -533. These emission sources are described in this Statement of Basis.

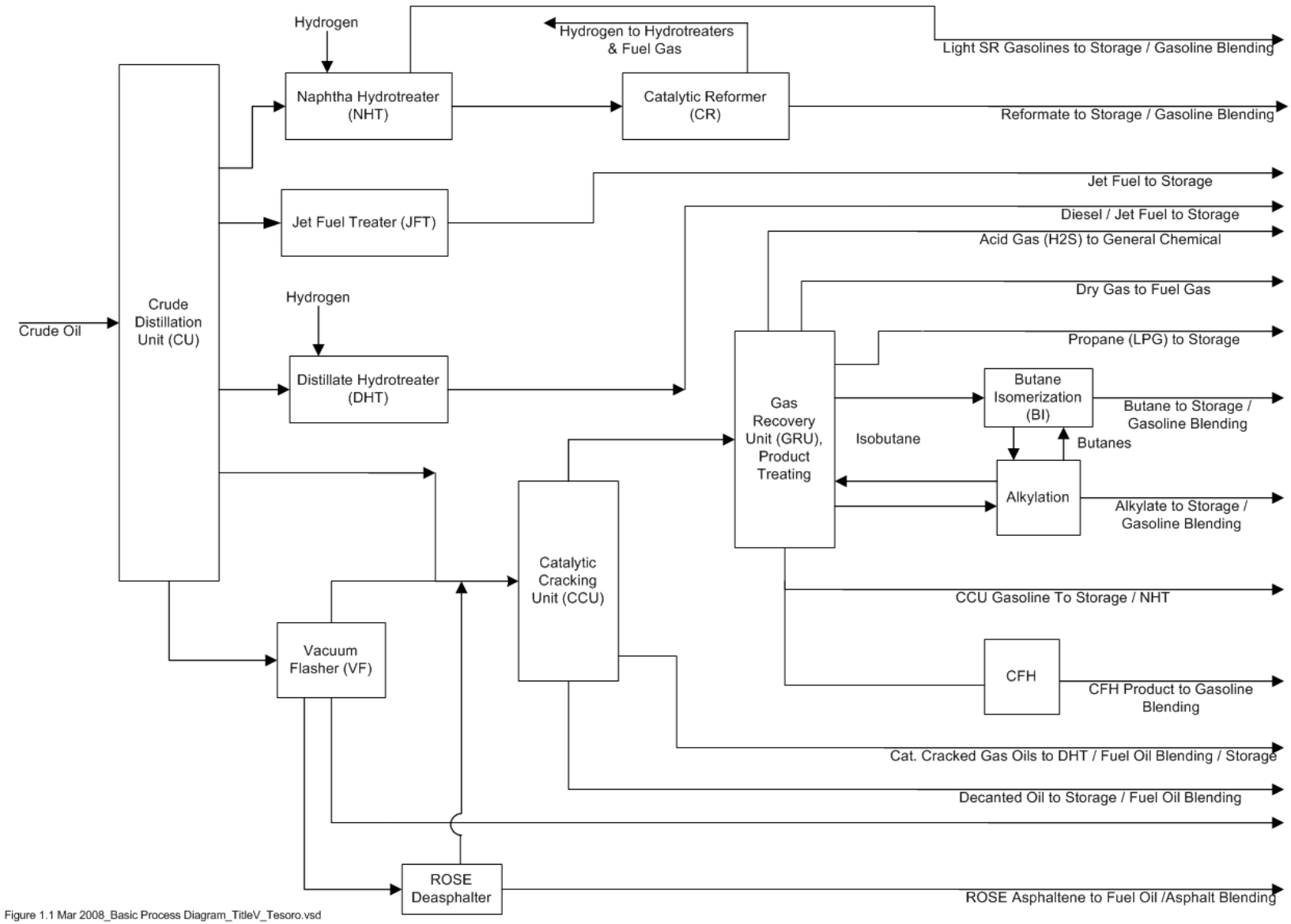

Figure 2-1 General Refinery Process Flow Diagram

2.1 Primary Crude Oil Processing

2.1.1 Crude Distillation Unit (CU)

The Crude Distillation Unit separates crude oil (including some recycle stocks) by distillation into fractions according to boiling point range. The fractions produced are sent to storage and/or other refinery process units. An illustrative process flow diagram of the CU is included as Figure 2-2.

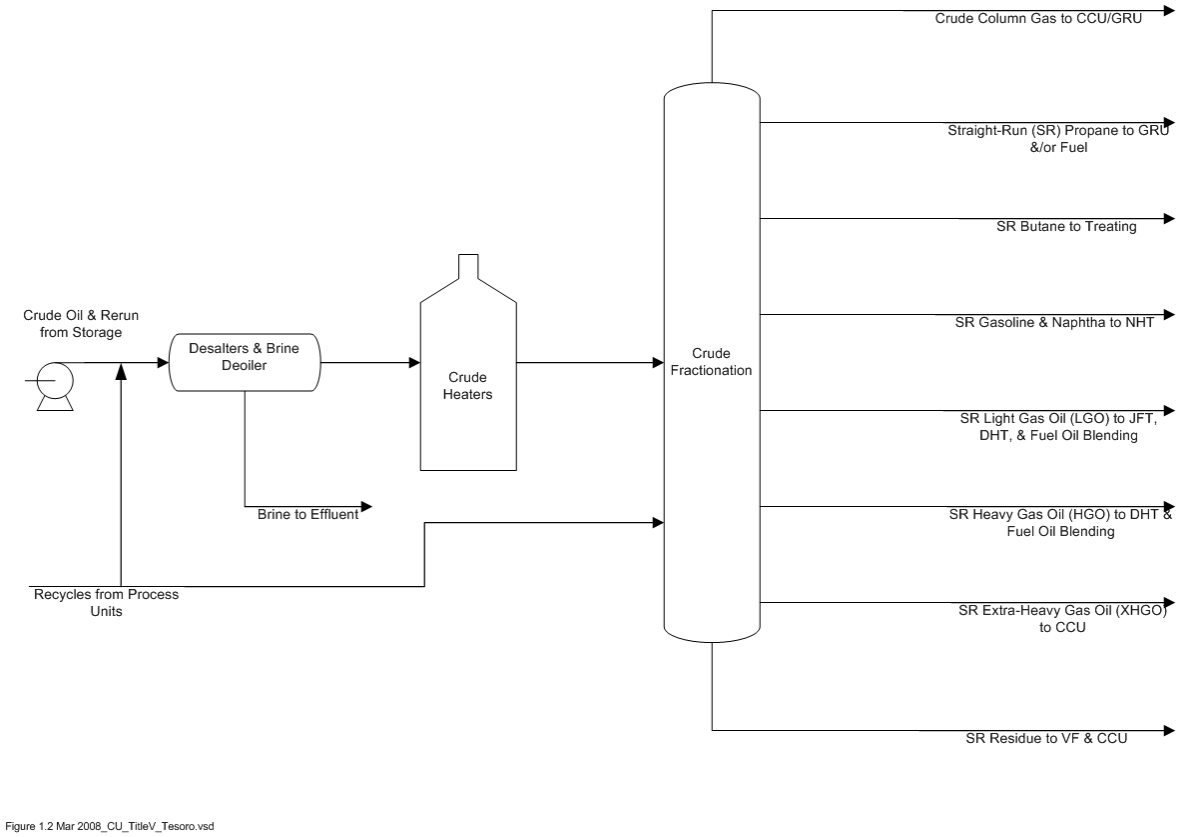

Figure 2-2 Crude Distillation Unit

Crude oil from on-site storage tanks is first desalted to remove contaminants that could cause downstream fouling or corrosion. The desalted crude is then charged to the Crude Column, where it is distilled into fractions; the fractions are routed to other process units and/or to storage tanks. The overhead liquid, which contains LPG-range and gasoline-range material, is subjected to further distillation before being sent to other refinery process units. Products in the gasoline and gas-oil boiling ranges are routed to storage and/or the hydrotreaters, the Catalytic Cracking Unit (CCU), the Jet Fuel Treater or the Fuel Oil Blenders. The highest-boiling-point (heaviest) fraction, Straight-Run (SR) Residue, is fed to the Vacuum Flasher and/or the CCU.

2.1.2 Crude Residue Vacuum Distillation Unit (Vacuum Flasher, VF)

The Vacuum Flasher separates SR Residue into fractions under vacuum. The separation takes place under vacuum conditions because the higher temperatures required to fractionate the residue at higher pressures would result in thermal cracking of the residue and coke formation in the process equipment. The recovered distillates are fed to the CCU;

the remaining fraction, pitch, is sent to the ROSE Unit or the CCU for further processing or is blended into fuel oil or asphalt binder.

2.1.3 Residuum Oil Supercritical Extraction (ROSE) Deasphalter

The ROSE Deasphalter uses propane/butane solvent to extract oils suitable for CCU Feed from VF pitch. The extract, DA Oil or ROSE Oil, is fed to the CCU; the raffinate, ROSE asphaltene, is blended into fuel oil or asphalt binder. An illustrative process flow diagram of the Vacuum Flasher, Deasphalter and ROSE Unit is included as Figure 2-3.

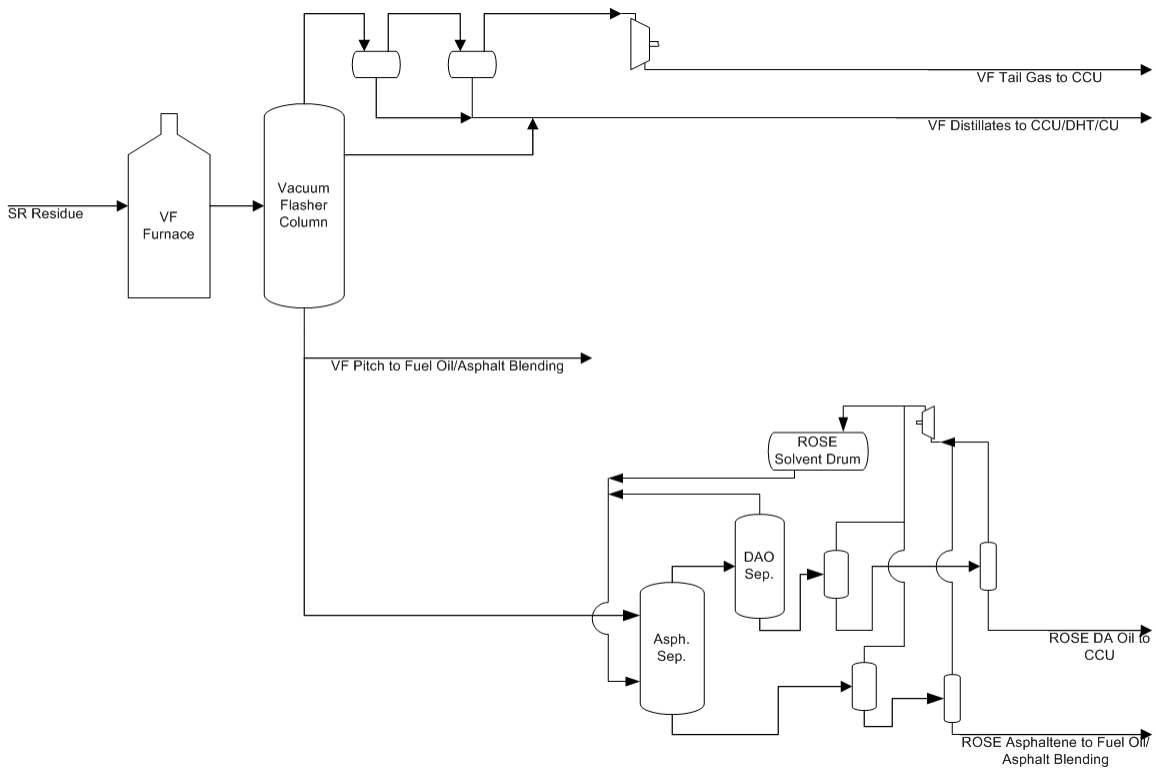

Figure 2-3 Vacuum Flasher and ROSE Unit

2.1.4 Jet Fuel Treater (JFT)

Jet fuel is treated for removal of hydrogen sulfide, mercaptans and naphthenic acids by caustic wash and carbon bed oxidation.

2.1.5 Fuel Oil and Asphalt Blenders

The fuel oil and asphalt blender areas meter lighter oils with asphalt and pitch produced at the refinery to make commercial asphalt and fuel oils suitable for sale as finished products (e.g., marine fuel oil, industrial fuel oil); they can also make oil suitable for use in refinery furnaces with oil-burning capability.

2.1.6 Fuel Gas Blender

The Fuel Gas Blender mixes process gases from refinery process units with propane, butane, or purchased natural gas as needed to supply sufficient fuel for the refinery's furnaces. A continuous emissions monitoring system (CEMS) analyzes the blended fuel gas H_2S concentration to demonstrate compliance with H_2S and SO_2 emission standards. An

illustrative process flow diagram of the fuel oil, asphalt, and fuel gas blending systems are included as Figure 2-4.

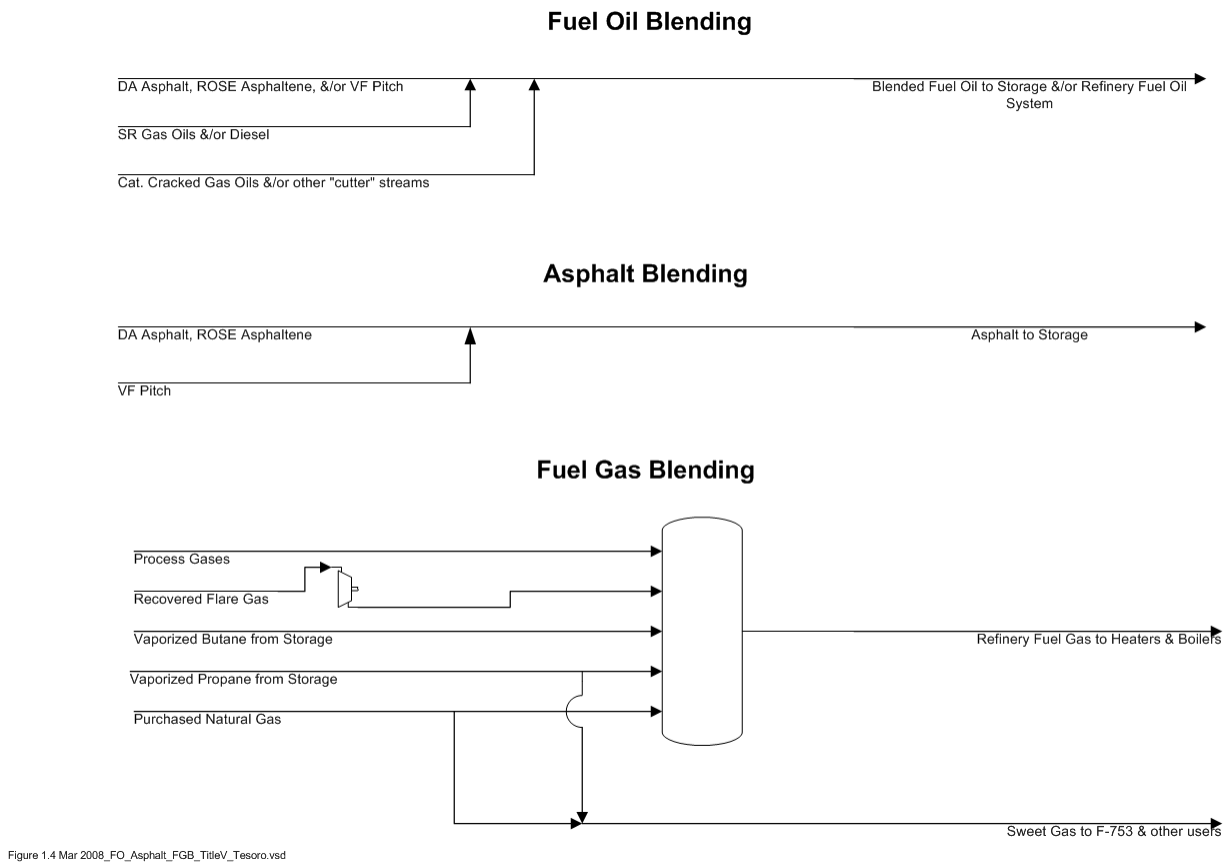

Figure 2-4 Fuel oil, asphalt, and fuel gas blending systems

2.2 Hydroprocessing

Hydroprocessing generally refers to the catalytic reforming process, which generates byproduct hydrogen gas – and the catalytic treatment of refinery intermediate and product streams to remove unwanted or detrimental nitrogen, sulfur, and oxygen compounds and/or to upgrade the stream to meet specifications.

2.2.1 Catalytic Reformer (CR)

The CR uses a system of fixed-bed catalytic reactors to increase the octane rating of its gasoline-range feed. The reformate product is sent to gasoline component storage for use in fuel blending. The reforming reaction generates hydrogen, which is used in the hydrotreaters. CR catalyst requires periodic regeneration to maintain activity. The regeneration process involves removing coke from the catalyst by combustion and adding chlorine to the catalyst via a chloriding agent. An illustrative process flow diagram is included as Figure 2-5. The facility proposed a feed isomerization unit with the 1993 Clean Fuels project that was only partially constructed. The project equipment that was installed has been managed as part of the CR since that time.

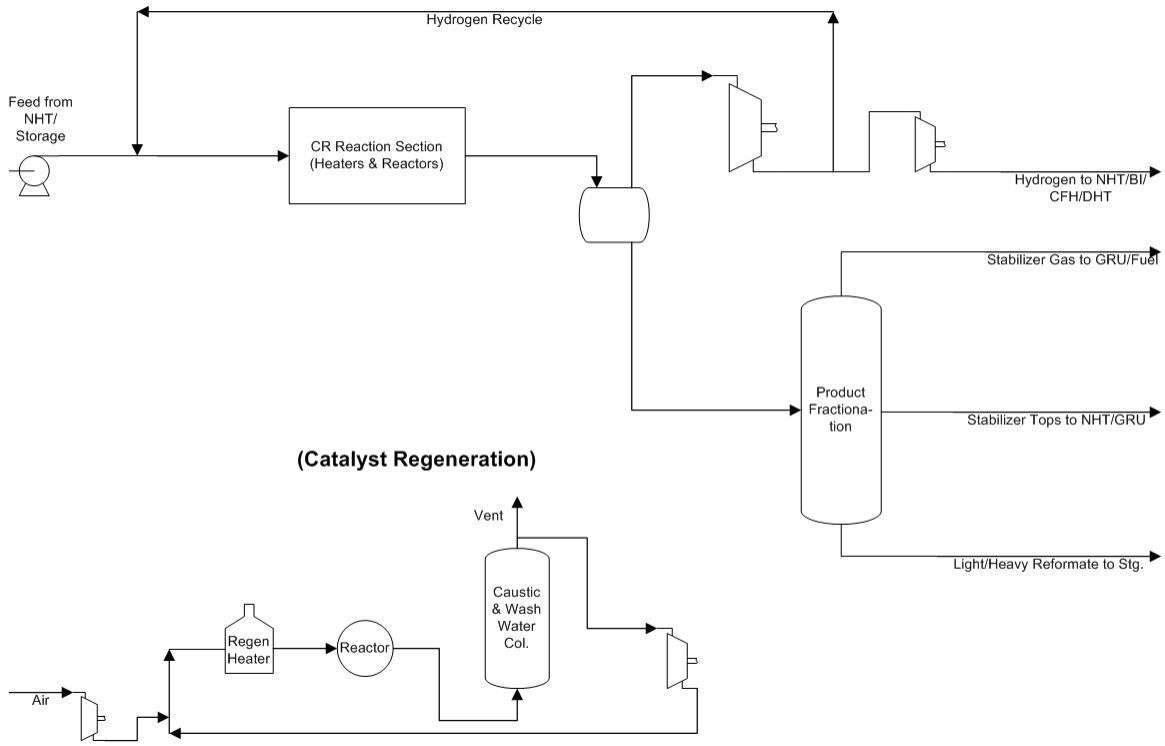

Figure 2-5 Catalytic Reformer

2.2.2 Naphtha Hydrotreater (NHT)

The NHT uses hydrogen and a fixed-bed catalyst to remove contaminants, such as sulfur, from its gasoline-range feed. The hydrotreated gasoline-range product is fed to the CR or used as a gasoline blending component. The NHT is included in a unit boundary with the CR.

2.2.3 Catalytically Cracked Gasoline Splitter (CGS)

The CGS separates Light Catalytically Cracked Gasoline from the Gas Recovery Unit into light, middle and heavy fractions. The light fraction is caustic treated and directed to storage/gasoline blending; the middle fraction is fed to the NHT; and the heavy fraction is fed to the Clean Fuels Hydrotreater (CFH). An illustrative process flow diagram of the NHT and CGS is included as Figure 2-6.

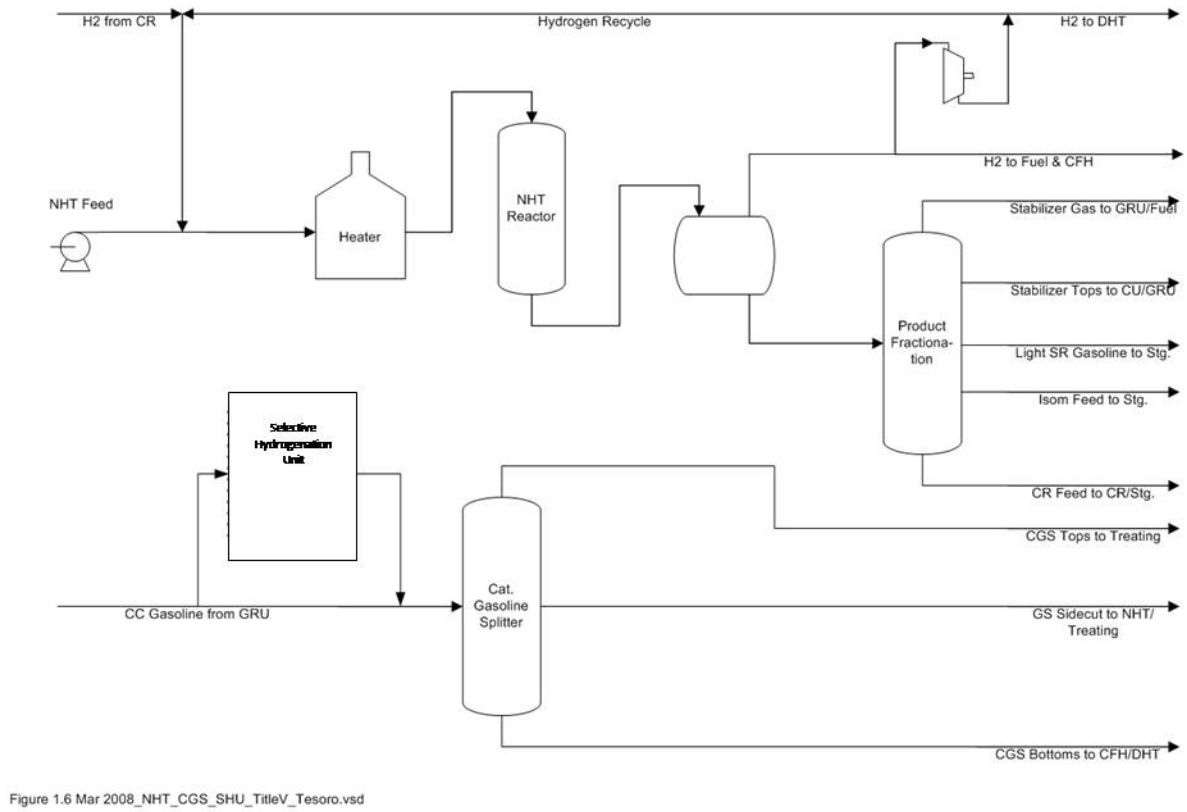

Figure 2-6 Naphtha Hydrotreater & Cat Gas Splitter

2.2.4 Distillate Hydrotreater (DHT)

The DHT uses hydrogen and a fixed-bed catalyst to remove contaminants, as sulfur, from its feeds. The hydrotreated product is primarily sold as jet fuel or diesel fuel, depending on the boiling range of the feed.

2.2.5 Clean Fuels Hydrotreater (CFH)

The CFH uses hydrogen and a fixed-bed catalyst to remove sulfur contaminants from fuel products prior to blending. An illustrative process flow diagram of the CFH and DHT is included as Figure 2-7.

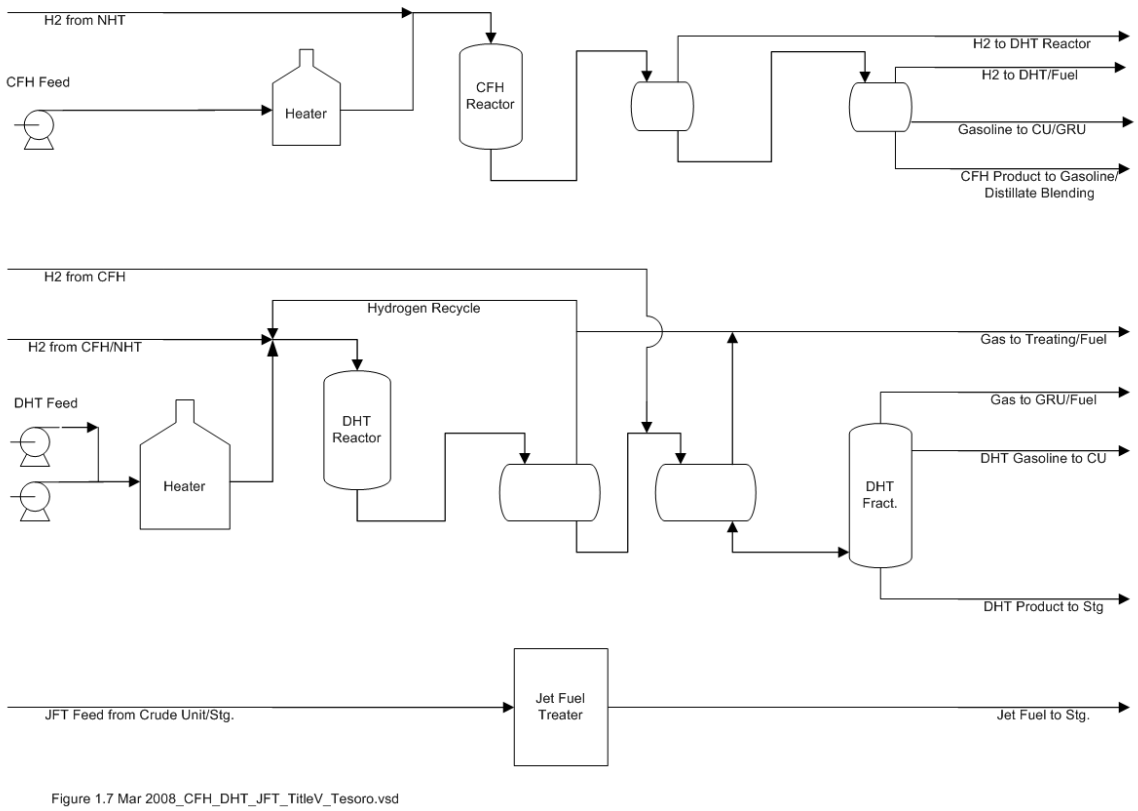

Figure 2-7 Clean Fuels Hydrotreater, Diesel Hydrotreater, & Jet Fuel Treater

2.3 Benzene Saturation (BenSat) Unit

The benzene saturation unit is designed to allow the facility products to meet U.S. Environmental Protection Agency (EPA) Mobile Source Air Toxics Phase 2 (MSAT2) gasoline regulations.

Feed to the BenSat unit is a combination of light, benzene-rich reformate, naphtha hydrotreater (NHT) dehexanizer tops, and hydrogen-rich makeup gas, all currently produced by the existing catalytic reformer (CR) / NHT units. Reformate from the CR unit will be split using the existing fractionator, C-6601. The BenSat reactor is designed to catalytically hydrogenate the benzene into cyclohexane in the stream, bringing the gasoline range product within the EPA fuel specifications. Product from the unit will be sent to tank storage for blending. Overheads from the unit will be vented to the refinery fuel gas system. Figure 2-8 shows the general flow for the BenSat unit.

The BenSat unit includes three steam-supplied heat exchangers. The purpose of the exchangers is to provide heat for starting up the unit. Since the hydrogenation reaction is exothermic, once the unit is in operation, steam is no longer required.

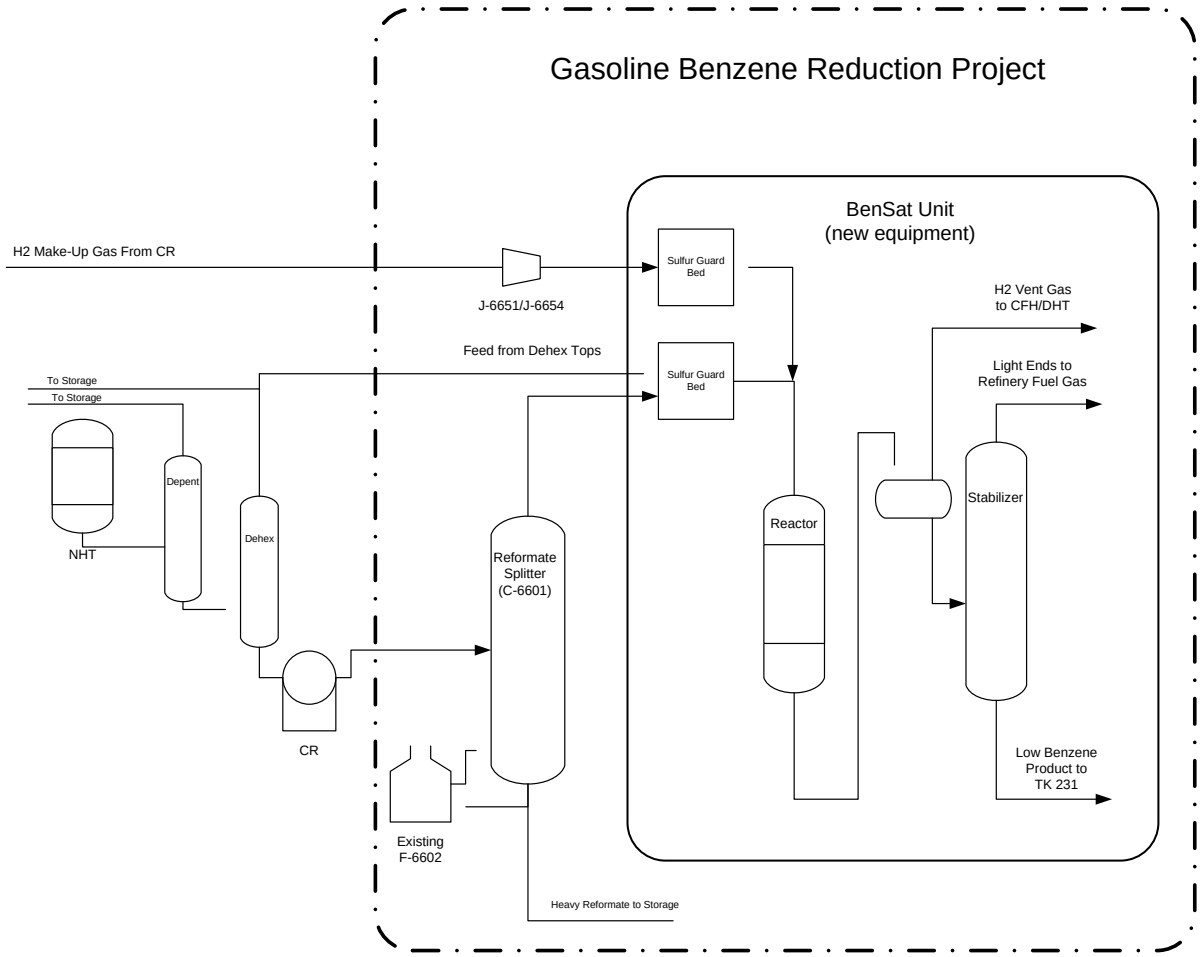

Figure 2-8 Benzene Saturation Unit

2.4 Catalytic Cracking, Product Fractionation, And Treating

2.4.1 Catalytic Cracking Unit (CCU)

The CCU uses a circulating fluidized solid catalyst at elevated temperatures and pressures to convert heavy gas-oil feeds into lighter materials such as gasoline. The majority of the reactor product is fractionated; the fractions heavier than gasoline (gas oils and decanted oil) are sold as fuel oil blending stocks or are processed elsewhere in the refinery. A portion of the gasoline range product is sent to gasoline component storage following treating; the remaining, lighter products are sent to the gas recovery unit for further processing. Coke formed as a reaction product remains on the catalyst and is removed from the catalyst by combustion in the CCU regenerator. Regenerator flue gas is combusted in two carbon monoxide (CO) boilers, destroying residual organic hazardous air pollutants and generating steam. In the event of a CO boiler outage, the regenerator is switched to total-burn mode for combustion of the CO. As discussed in the section below, exhaust gases from the CO Boilers are treated in a flue gas scrubber (FGS; ExxonMobil design). A CCU diversion stack is available to bypass regenerator flue gas to atmosphere during CCU and CO boiler shutdowns, start-ups, malfunctions or other emergency situations.

The COBs can be operated without the CCU by using refinery fuel gas as the sole combustion source. An illustrative process flow diagram of the CCU and the sour water strippers is included as Figure 2-9. The CO boiler flue gas is routed to the flue gas scrubber for particulate matter and sulfur dioxide removal. The scrubbing liquor is sent to the purge treatment unit (PTU) for oxidation and particulate removal.

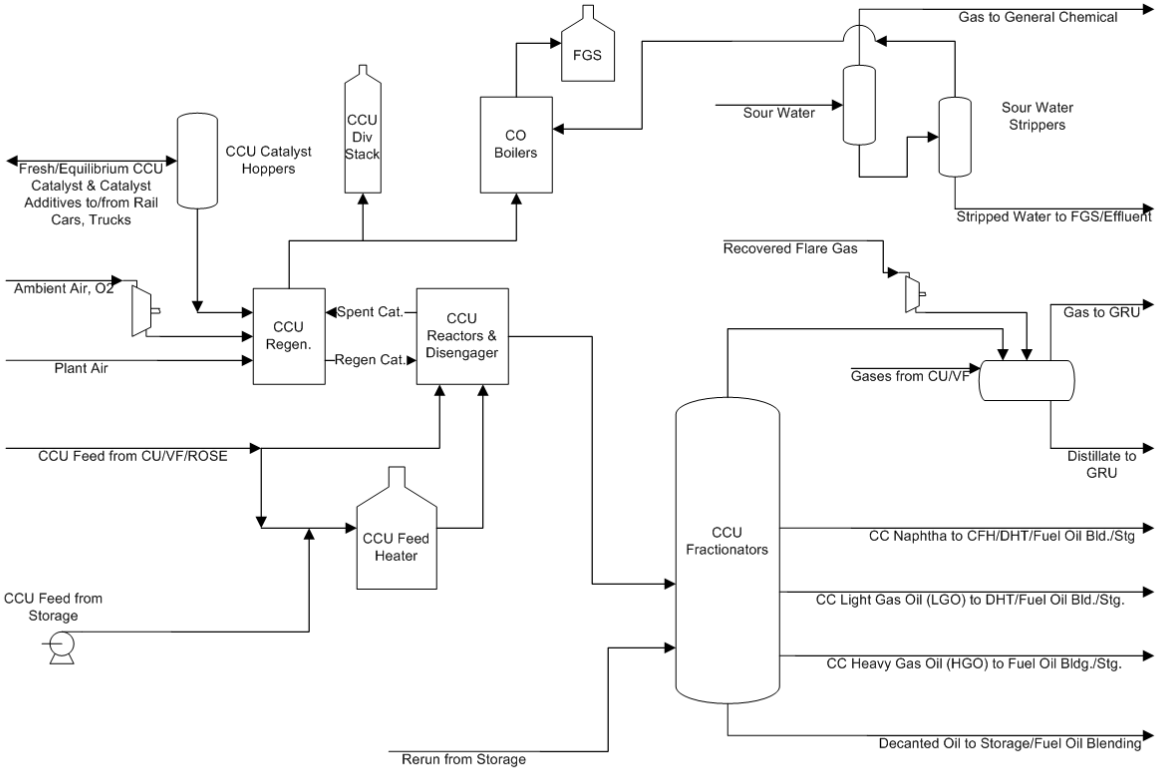

Figure 2-9 Catalytic Cracking Unit and Sour Water Stripper

2.4.2 Sour Water Stripping (SWS)

Process water that could contain H_2S ("sour" water) is processed in the sour water strippers. The sour water is normally subjected to two stages of steam stripping. The first-stage stripper vapor, which contains the majority of the H_2S, is normally routed to General Chemical via pipeline; the second-stage stripper vapor, which contains mostly ammonia and steam, is burned in the CO boilers. When both CO boilers are down for maintenance, the second-stage stripper vapor is burned in F-751 and/or F-752. The stripped sour water is routed to the flue gas scrubber or the effluent treatment plant.

2.4.3 Gas Compression and Recovery Unit (GRU)

The GRU separates gasoline and lighter material into three fractions that are processed elsewhere in the refinery. The primary source of feed is the CCU, but other refinery processes also send similar boiling-range streams to the GRU. The three streams produced are: Dry gas, which is sent to the fuel gas blender following treating; C_3/C_4, which is fed to the alkylation plant following treating; and light catalytically cracked gasoline (LCC gasoline), which is sent to gasoline component storage following treating or is fed to the CGS.

The GRU also contains a depropanizer that processes an alkylation plant stream. Its tops stream is sent to LPG storage following treating; its bottoms stream is recycled to Alkylation. An illustrative process flow diagram of the GRU is included as Figure 2-10.

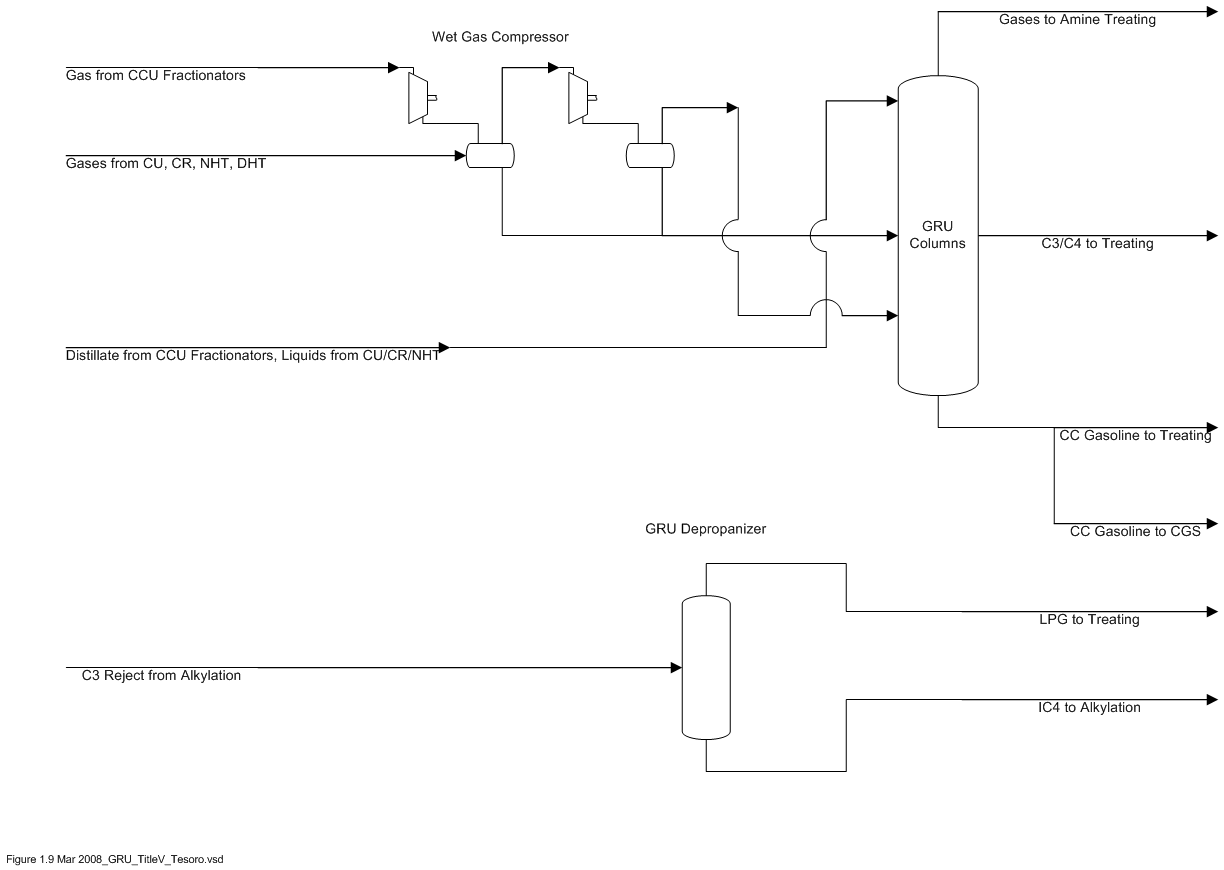

Figure 2-10 Gas Recovery Unit

2.4.4 Treating

Treating process operations remove contaminants from various process streams so that the streams can be used in other refinery processes or blended into finished products.

Solid calcium chloride is used to dry LPG. Circulating amine solution, e.g. methyl diethanolamine (MDEA), is used to remove acid gases, primarily H_2S, from fuel-gas range streams in the refinery and GRU C_3/C_4. In the amine regenerator, recovered acid gases are steam-stripped from the rich amine solution and routed to General Chemical, and the stripped (lean) amine solution is recirculated. Caustic soda is used to remove H_2S and mercaptans from GRU C_3/C_4 and SR Butane from the Crude Distillation Unit; it is also used to remove H_2S, mercaptans, and organic acids from CCU gasoline streams. Merox (mercaptan oxidation) treating is also used to convert CCU gasoline mercaptans to disulfides. The majority of spent caustic streams from these treaters are recovered and shipped off-site or treated in the refinery wastewater treatment plant. An illustrative process flow diagram of the Treating operations is included as Figure 2-11.

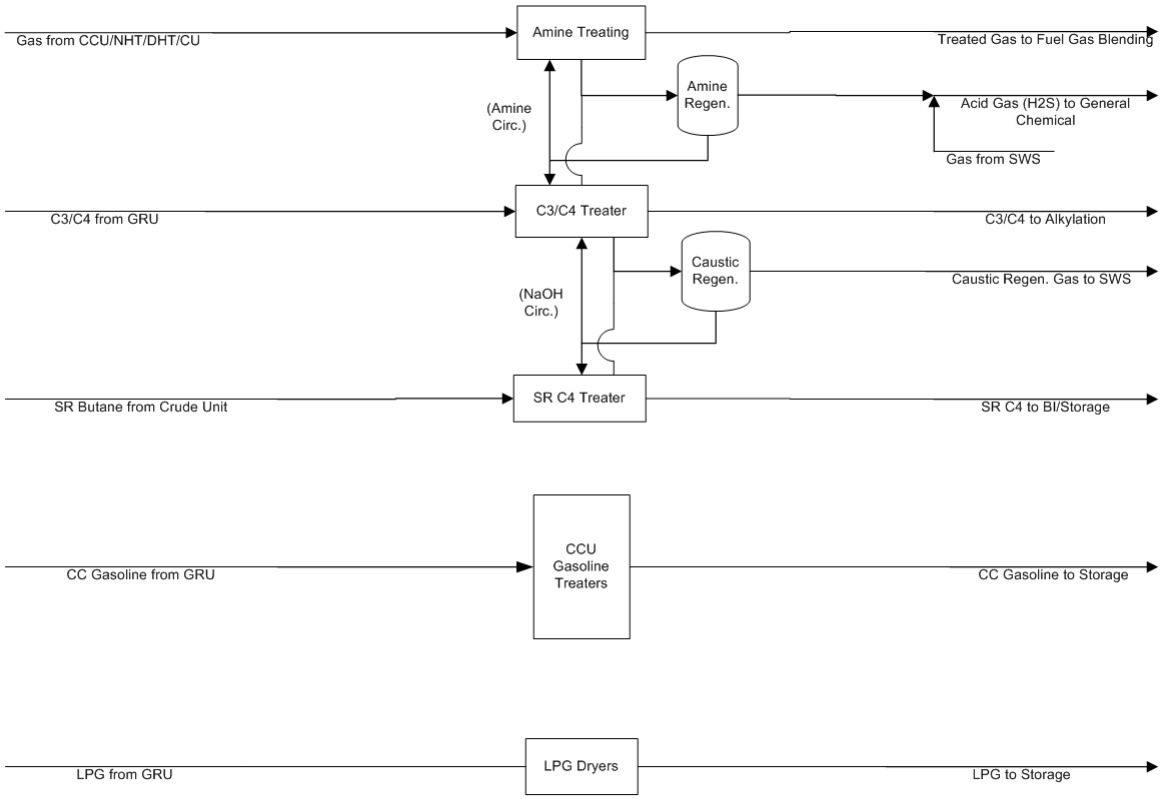

Figure 2-11 Treating

2.5 Alkylation

The Alkylation (Alky) plant uses sulfuric acid as a catalyst to make alkylate, a gasoline blending component, from unsaturated light hydrocarbons (contained in the C_3/C_4 stream from the Gas Recovery Unit) and isobutane. Alkylate is sent to gasoline component storage following fractionation and in-plant treating.

A pipeline is used to receive fresh sulfuric acid from General Chemical and to send spent sulfuric acid back to General Chemical. In the event of a pipeline malfunction or shutdown of General Chemical, alternative transportation and/or processing is initiated. An illustrative process flow diagram of the Alky unit is included as Figure 2-12.

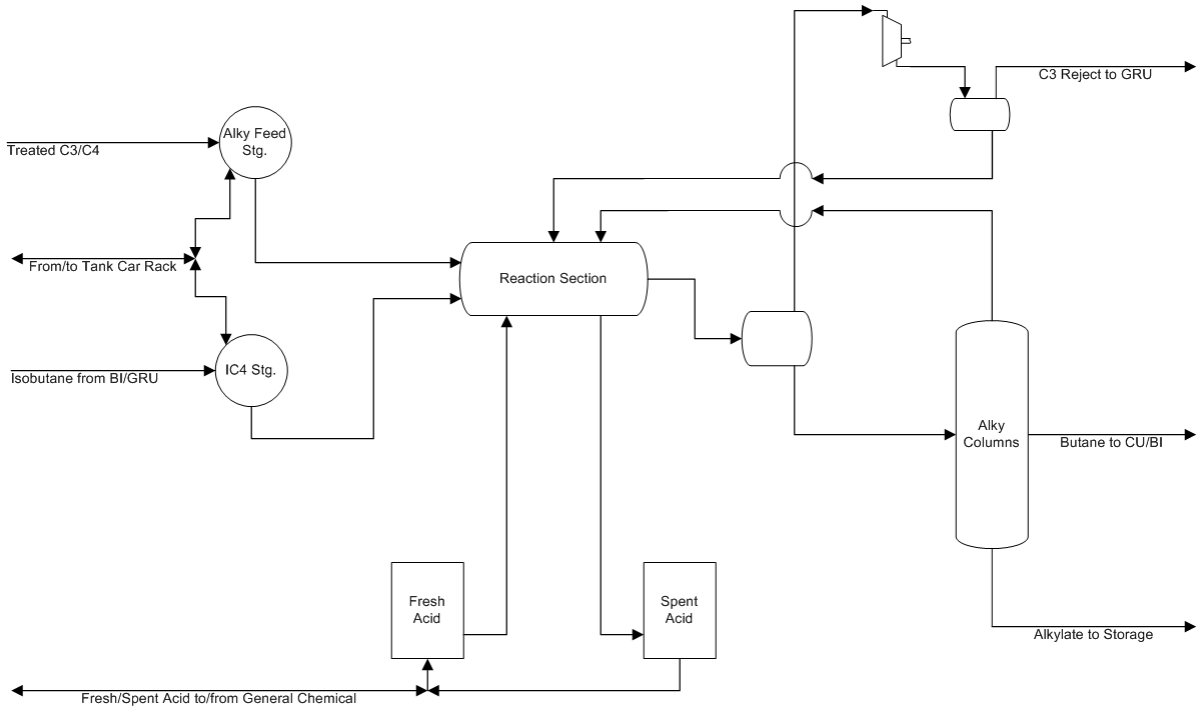

Figure 1.11 Mar 2008_Alky_TitleV_Tesoro.vsd

Figure 2-12 Alkylation Unit

2.6 Butane Isomerization

The Butane Isomerization (BI) plant uses a fixed bed catalyst system to convert n-butane in its feed to isobutane. The product isobutane is fed to Alkylation following treating; the remaining n-butane is sent to butane storage. An illustrative process flow diagram of the BI plant is included as Figure 2-13.

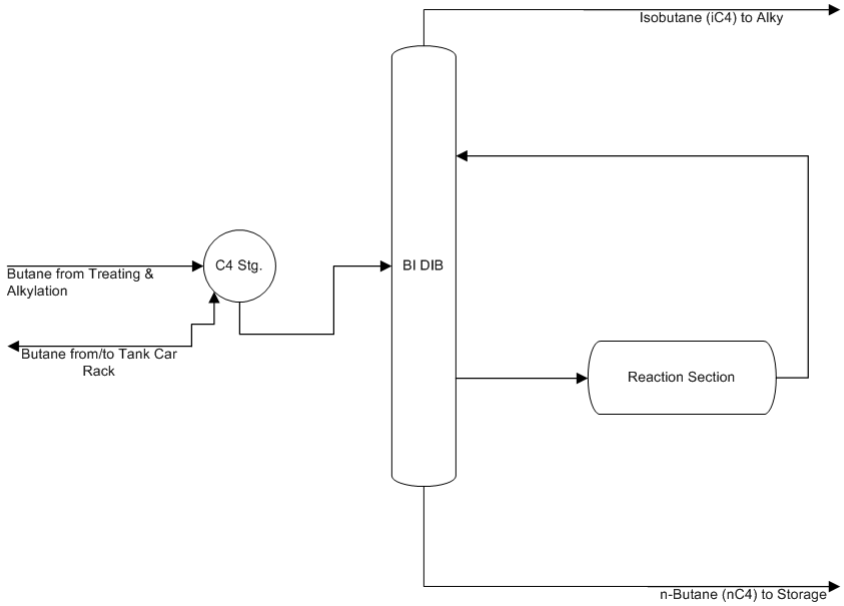

Figure 2-13 Butane Isomerization

2.7 Storage, Blending, And Transfer Operations

Raw materials, process intermediates, blending components, process chemicals and additives, and finished products are stored in a variety of storage tanks and vessels at the refinery. Gasoline blending, all petroleum product shipments and receipts, and some of the process chemical/additive shipments and receipts occur outside of the process unit boundary limits. An illustrative process flow diagram of storage, blending, and transfer operations is included as Figure 2-14.

Examples of the modes of transportation employed in movement of petroleum and process chemicals, and the materials moved, include:

Marine shipments and receipts: includes crude oil, process intermediates (e.g., CCU feed), blending components, finished liquid products

Pipeline shipments and receipts: includes crude oil, finished liquid products, process intermediates, H_2S and spent and fresh sulfuric acid transfers to and from General Chemical

Rail shipments and receipts: includes LPG's, fresh and spent caustic, asphalt binder and catalytic cracking catalysts.

Truck shipments and receipts: includes diesel, LPG, asphalt binder, process chemicals, catalysts and additives, fresh and spent caustic/acid

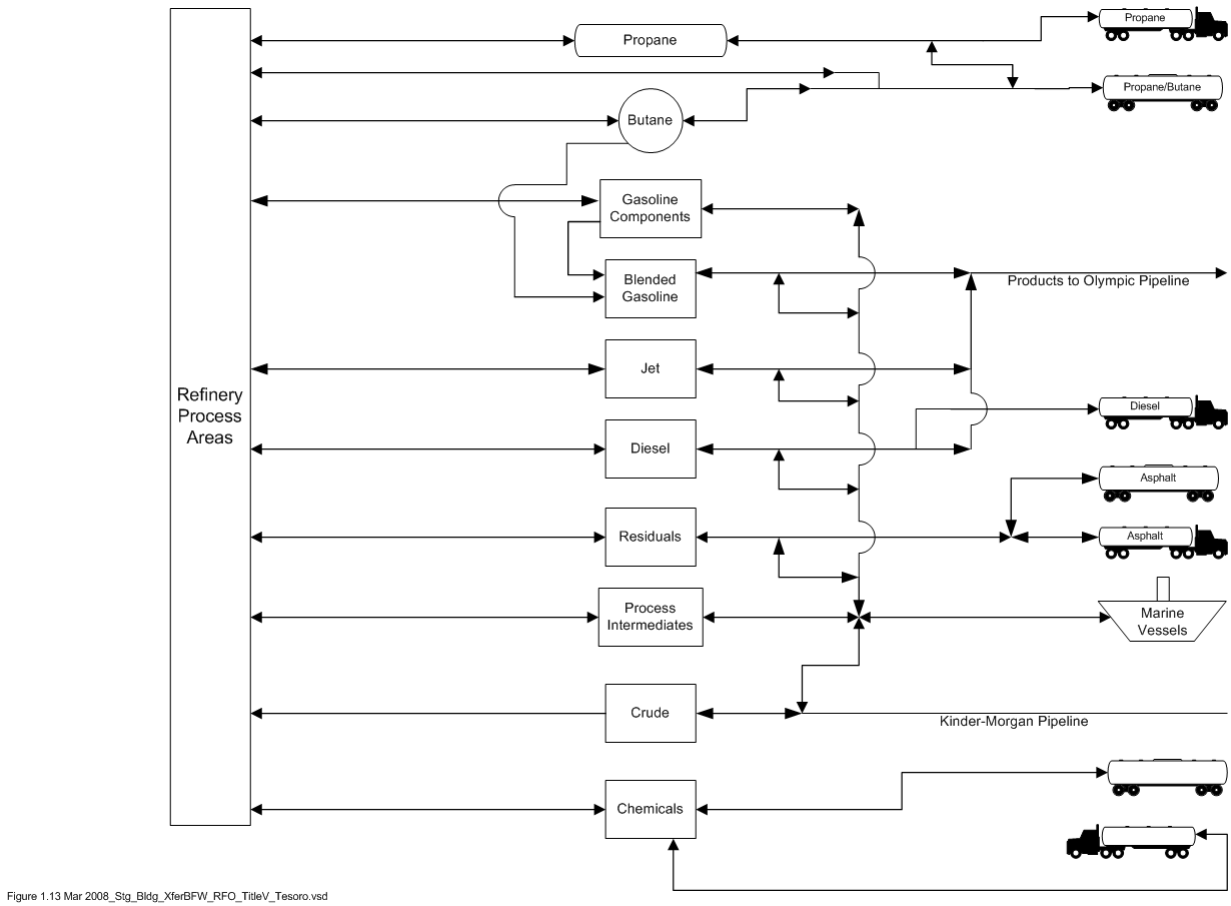

Figure 2-14 Storage, Blending and Transfer

2.8 Boiler/Utilities Plant

2.8.1 Boiler Feed Water (BFW) Treatment

BFW Treatment prepares makeup water and recycled steam condensate for use in the refinery steam generators. Ionic species present in makeup water from the City of Anacortes are removed by regenerable strong acid ion exchange resin, decarbonation, and regenerable strong base ion exchange resin. The treated makeup water is mixed with recovered steam condensate, deaerated to remove dissolved gases, treated with chemicals to prevent fouling and corrosion in the boilers and downstream equipment, and pumped to the boilers. An illustrative process flow diagram of the boiler feed water and steam systems are included as Figure 2-15.

2.8.2 Utility Boilers & Steam Distribution

Steam used at the refinery is generated in nine on-site boilers; five of these, including the two CO Boilers (in the CCU) are fired boilers. Three fired boilers are Utility boilers. Two of these boilers utilize refinery fuel gas or oil; the third is permitted to utilize natural gas and/or LPG. Other boilers (including the ROSE asphalt drum, CCU catalyst cooler, and CR unit) generate steam from waste heat. The steam generated by all boilers is delivered to the users at four pressure levels from ca. 650 psig to ca. 15 psig. Recovered condensate is recycled to BFW Treatment.

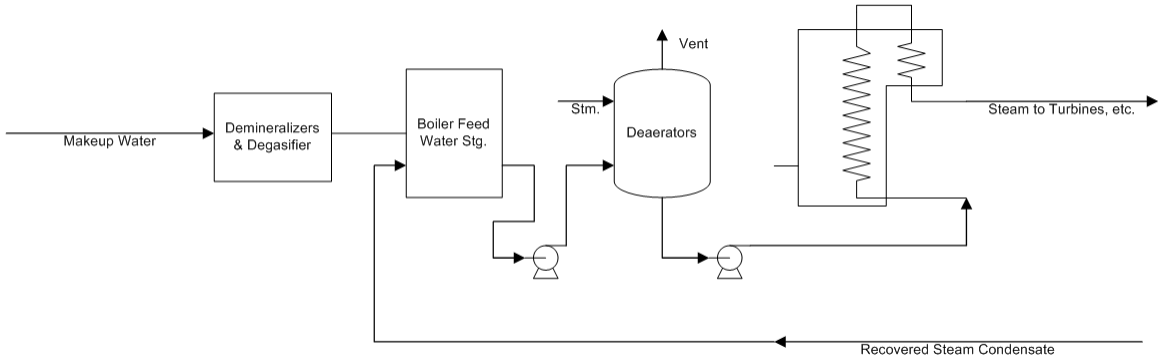

Figure 2-15 Boiler Feed Water

2.8.3 Refinery Fuel Oil Storage System

Fuel oil produced at the Fuel oil blenders which meets sulfur specifications for use in the refinery is stored at Utilities and is fed to furnaces and boilers from storage tanks, as shown in Figure 2-16. The usage and sulfur content of the fuel oil is monitored by Utilities to ensure compliance with SO_2 emission standards.

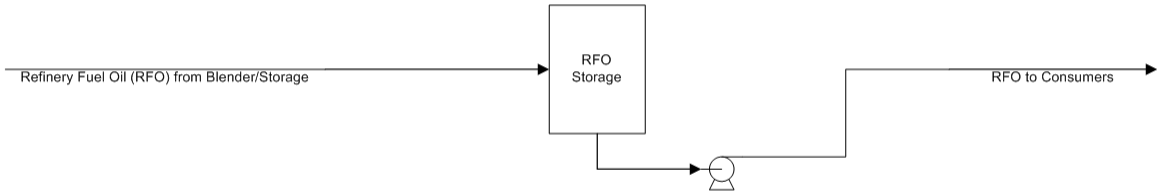

Figure 2-16 Refinery fuel oil

2.8.4 Air Compressors

Compressed air used in the refinery is provided by engine-driven, steam turbine-driven, and electric motor-driven compressors.

2.9 Flares

The purpose of the flare system is to dispose of hydrocarbons that need to be vented from process equipment. The flare system contains three interconnected staged combustors with remotely operated steam injection for enhanced air/hydrocarbon mixing and combustion. A

flare gas recovery compressor routes flare gas to the GRU where it is combined with other gas streams for treatment or is routed to the refinery fuel gas system. An illustrative process flow diagram of the Flare System is included as Figure 2-17.

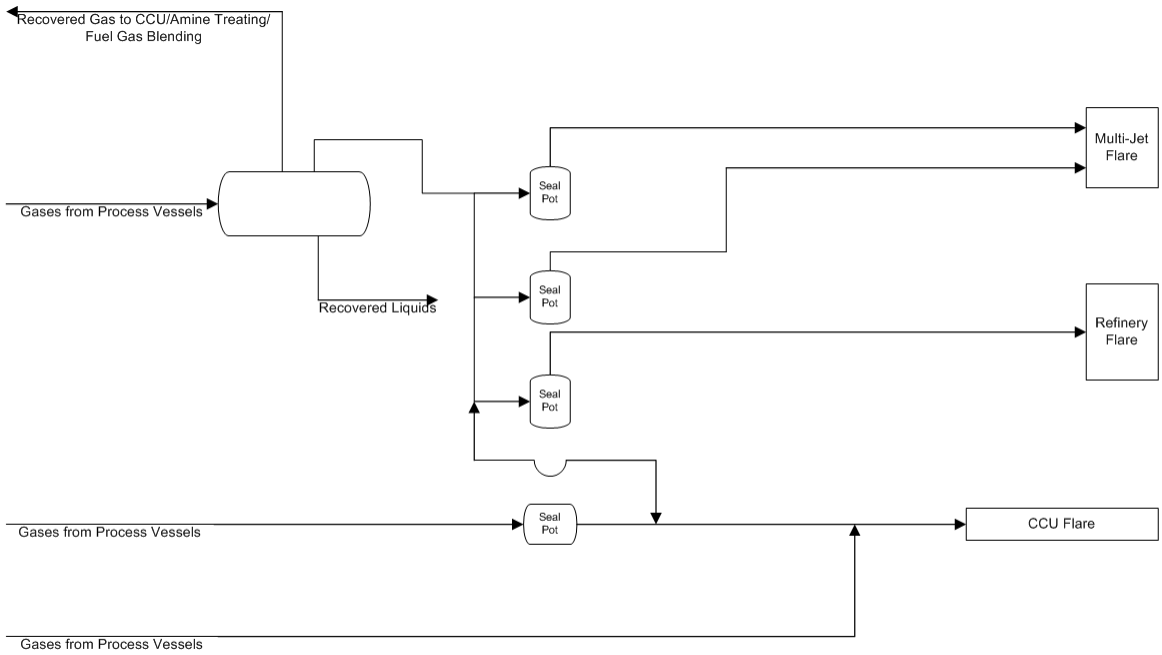

Figure 2-17 Flare System

2.10 Effluent Treatment Plant

The Effluent Treatment Plant protects the environment from potentially harmful discharges of waterborne material by treating wastewater generated at the Anacortes Refinery. Process wastewater streams, domestic wastewater, and surface runoff from non-process areas are routed through the Effluent Treatment Plant. This facility also receives oil/water mixtures from Tesoro marketing and distribution facilities, and may also receive ballast water from marine vessels.

Process area wastewater is collected in individual drain systems and routed to an oil/water (API) separator system via closed sewers. The water leaving the API separator is joined by treated domestic wastewater and routed to clarifiers for further oil/solids removal. The clarified water is then biologically treated in aeration basins to remove the remaining organics. The treated effluent water is then combined with non-process surface runoff (storm water) and is discharged to Fidalgo Bay via an NPDES-permitted outfall. Oil recovered at the Effluent Treatment Plant is recycled to refinery process units; recovered solids are removed, concentrated, and shipped off-site. An illustrative process flow diagram of the Effluent Treatment Plant is included as Figure 2-18.

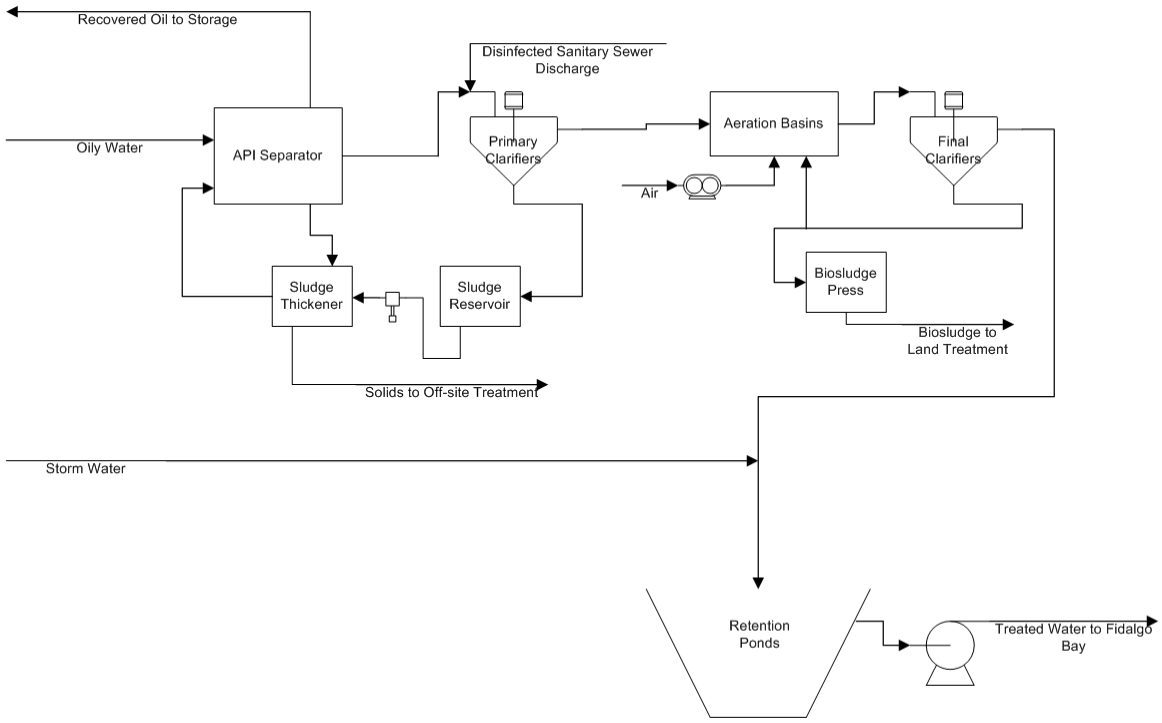

Figure 1.17 Mar 2008_Effluent_TitleV_Tesoro.vsd

Figure 2-18 Effluent Treatment Plant

3. COMPLIANCE HISTORY

The Shell Oil Products Co., Anacortes Refinery, as the predecessor to the Tesoro Refining and Marketing Company, was initially registered by the NWCAA on June 30, 1970. Notices of Violations (NOVs) issued by the NWCAA to the Shell Oil Products Company and Tesoro prior to 1998 are listed in the original Statement of Basis for the 2002 AOP. Warnings and NOVs issued by NWCAA since 1998 are presented in Table 3-1.

Table 3-1 Notices of Violation and Written Warnings after January 1, 1998

Case No.	NOV issue date	Violation date	Violation citation	Warning or NOV	Description of violation	Closure
3000	10/29/99	08/11/99	NWCAA 301.7 & 580.83, 40 CFR 63.648(a)	NOV	Cylinder gases currently used for Organic Vapor Analyzer calibrations were past their shelf lives (Oct. 1997) and had not been reanalyzed.	$11,000 penalty levied on 1/7/00, with $5,500 suspended. $5,500 penalty paid on 2/17/00.
3001	10/28/99	08/10/99	Other	NOV	Records of differential pressure readings during equilibrium catalyst hopper transfer and a log of transfer dates and times were not available to NWCAA inspectors.	$1,400 penalty paid on 2/17/00.
3026	03/13/00	03/05/00	40 CFR 63.646(a)	Warning	Tank 3, a Group 1 Refinery MACT tank, was emptied to the level that the external floating roof was not floating on the liquid surface (i.e., was on its legs) for 19 hours after the facility could have refloated the roof. The violation was of 63.646(a), which references 63.119(c)(3).	
3220	02/13/02	08/21/01	NWCAA 520.13	NOV	Burning of Refinery Fuel Oil (RFO) containing a weight of sulfur in excess of 2.0% at Utility Boilers F751 and F752 on 8-21-2001 for a minimum of 4 hours. Failure to report burning of RFO in exceedance of 2% weight of sulfur to the NWCAA within a twelve hour limit. Failure to keep pump 223 in good operating order. A valve was found open at pump 223 allowing the high sulfur fuel oil to enter Tank 87 on 8-21-2001.	$3,000 penalty paid on 4/11/02.
3272 and 3273	09/27/02	Not listed	40 CFR 60.482-3 40 CFR 63.648(a)	NOVs (2)	2 compressors (J-205 and J-206) being operated without required controls	NOVs rescinded (01/13/02) following demonstration that compressors are equipped with barrier fluid systems

Case No.	NOV issue date	Violation date	Violation citation	Warning or NOV	Description of violation	Closure
3274	09/27/02	Not listed	40 CFR 63.164 40 CFR 63.648(a) NWCAA Section 301.7	NOV	1 compressor (J-887-M) being operated without required controls	NOV rescinded (01/13/02) following demonstration that compressor is equipped with barrier fluid system
3275 and 3276	09/27/02	Not listed	40 CFR 60.482-3 40 CFR 60.590-592 NWCAA Section 580.83	NOVs (2)	2 compressors (J-901 and J-902) being operated without required controls	NOVs rescinded (01/13/02) following demonstration that compressors are equipped with barrier fluid systems
3292	12/30/02	11/22/02	NWCAA 560.1 40 CFR 63.119(a)(2) 40 CFR 63.646(a)	NOV	True Vapor Pressure for tank 136 was 12.8 which exceeded the upper limit of 11.1 for ten (10) hours on November 22, 2002	$1,000 penalty paid on 3/7/03
3309	03/17/03	02/28/03	WAC 173-400-205 AOP Term 2.5.2	NOV	The rate of emissions of sulfur oxides was varied according to atmospheric conditions and/or ambient concentrations during a period of normal operation. This practice is prohibited by Washington Administrative Code.	$100.00 penalty paid on 10/31/03. A letter of dismissal was sent to Tesoro on 10/03/03. Payment was requested in a 10/16/03 letter from Jamie Randles.
3310	03/17/03	02/28/02	40 CFR §61.345(a)(1)(i) AOP Term 5.9.9	NOV	Compliance with no detectable emissions requirements under the Benzene Waste NESHAP was not demonstrated initially or annually for a container (vacuum truck) operated by the refinery.	$500 penalty paid on 6/4/03.

Case No.	NOV issue date	Violation date	Violation citation	Warning or NOV	Description of violation	Closure
3321	06/17/03			NOV	Emissions from the Tesoro Refinery caused exceedances of the 0.100 ppm 24-hour ambient standard for sulfur dioxide. Concentrations averaged 0.135 ppm for November 18, 2002 and 0.105 ppm for April 7, 2003, as measured at the Tesoro ambient sulfur dioxide station. Wind speeds were in excess of 15 mph, from approximately 145 degrees on both days.	$13,000 penalty paid on 8/26/03
3326a	07/08/03	03/10/03	AOP Term 4.1 AOP Term 4.14	NOV	Failure to operate and maintain equipment adequately resulted in upset condition and approximately 50,000 pounds of hydrocarbon emissions. Water carryover from the desalter vessels in the crude unit passed through the crude furnaces, flashed into steam and over-pressurized the crude column causing four pressure relief valves to open.	$4,000 penalty paid on 9/16/03
3354	09/15/03	06/05/03	AOP Term 4.1 AOP Term 4.5	NOV	Failure to properly install and maintain equipment at the Depropanizer column caused a release of 8400 pounds of hydrocarbons from a tubing connection at the Crude Unit, shutdown of process heaters, and a release of 892 pounds of sulfur oxides and 17 pounds of nitrogen oxides from the flare. Opacity from process heater F-103 exceeded the 20% opacity standard for 16 minutes.	$2,000 penalty paid 11/26/03
3361	10/22/03	08/25/03	AOP Term 5.10.1	NOV	Leak Detection and Repair (LDAR) monitoring as required by the Refinery MACT 1 was not performed on pumps P-898 and P-8093 in the flare area on a monthly basis for the months of July, Oct., Nov., and Dec., of 2002 and Jan. through June of 2003.	$4,500 penalty paid on 12/22/03.
3374	12/02/03	12/02/03	WAC 173-400-205 AOP Term 2.5.2	NOV	The rate of emissions of sulfur oxides was varied according to atmospheric conditions and/or ambient concentrations during a period of normal operation on the following dates: March 20 and 21st, April 7, October 11, 16, and 18 of 2003. This practice is prohibited by Washington Administrative Code 173-400-205.	$3000 penalty paid on 2/9/04.
3377	12/10/03		AOP Term 4.4	NOV	Emissions from the Tesoro Refinery caused exceedances of the 0.100 ppm 24-hour ambient standard for sulfur dioxide. Concentrations averaged 0.103 ppm for November 28, 2003 and 0.105 ppm for April 7, 2003, as measured at the Tesoro ambient sulfur dioxide station. Wind speed exceeded 15 to 20 mph, from about 140 degrees for both days.	$8,000 penalty paid on 2/11/04.

Case No.	NOV issue date	Violation date	Violation citation	Warning or NOV	Description of violation	Closure
3392	02/10/04	01/27/04	AOP Terms 4.4, 4.10, and 4.11	NOV	Emissions greater than 1000 ppm sulfur dioxide averaged over 60 consecutive minutes from 21 fuel-gas burning combustion sources on January 7 and 8, 2004. The resulting stack gas measured at the ambient air station indicated two violations of the five-minute ambient standard of 0.800 ppm on January 8.	$14,000 penalty paid on 5/26/04.
3401	03/17/04	03/15/04	NWCAA 580.32 & 580.33	Warning	On February 17, 2004 high vapor pressure material was routed to tank 135 raising the true vapor pressure (TVP) of the tank contents to a maximum of 3.9 psia. Tank 135 seal and roof compliance status was downgraded in February 2002 due to chronic problems and the tank was put into low vapor pressure CCU feed (TVP estimated at 0.0001 psia) storage service. The excess emissions from this incident were estimated to be approximately 26 lb of VOC. This is the second time this type of incident has occurred in the past 3 months. The recurrence of misaligning high TVP materials to tank 135 indicates that no changes were made to procedures or equipment in response to the initial incident on 12/21/03.	
3432	09/09/04	05/15/04	AOP Term 4.10	NOV	Exceedance of the 1000 ppmv (7% O2) limit from the COB stacks on May 15, 2004 for seven consecutive hours. The incident stemmed from a series of procedural errors that resulted in upset of the MDEA treater. Severe foaming in the MDEA treater caused liquid carryover into the H2S header, blocking the line, requiring the H2S gas to be released to the COB stacks.	$2,000 penalty paid on 11/03/04.
3447	10/19/04	10/01/04	AOP Term 5.3.31	NOV	On October 1, 2004, CO emissions from the CO boiler 1 stack exceeded the emissions limit of 500 ppm (1-hour average, 7% O2) from 0912 to 1548 hours, or 7 1-hour averaging periods as demonstrated by the CEM.	$5,000 penalty paid on 12/21/04.

Case No.	NOV issue date	Violation date	Violation citation	Warning or NOV	Description of violation	Closure
3465	03/09/05	03/09/05	40 CFR 60.433-1(d)	NOV	Annual performance monitoring at the LPG loading area according to 40 CFR §60.483-1 resulted in a leak rate of 2.9% for the unit. The LPG loading area components are monitored for leaks under the provisions of NWCAA §580.8. LPG loading area components contain VOC and are subject NWCAA §580.83, which requires 40 CFR §60.591-593 monitoring requirements. 40 CFR §60.592(b) states that an owner or operator may elect to comply with the requirements of §60.483-1 and §60.483-2. Tesoro has opted to conform to the 40 CFR §60.483-1 (annual performance demonstration) for the unit according to periodic reports received by NWCAA.	$3,000 penalty paid on 5/2/05.
3497	08/15/05	07/29/05	40 CFR §60.483-7 AOP Term 5.1.16	NOV	Failure to conduct monitoring of repaired components under applicable leak detection and repair provisions. 40 CFR §60.483-7: 2003 - 18 events in tank farm 1 and 2004 - 2 events in the CGS unit. AOP term 5.1.16: 2004 - 5 events in the ROSE unit and 2005 - 3 events in the ROSE unit	$3,000 penalty paid on 11/01/05.
3590a	8/2/07	03/12/07	NWCAA 367 and Appendix A	NOV	The facility failed to complete the relative accuracy test on F-753 Boiler upon collection of data indicating that the predictive emissions monitoring system (PEMS) would not pass the regulatory standards for accuracy. Therefore the PEMS system was operating out of control from November 3, 2006 to December 6, 2006 (33 days), when a temporary continuous emissions monitoring system (CEMS) was installed and calibrated. NOV 3590 was revised 8/2/07 to add two NWCAA regulation violations and delete the AOP term cited. The violation description was also modified.	$42,900 penalty paid on 9/5/07.
3601	05/17/07	05/02/07	NWCAA 300.15	NOV	Order of Approval to Construct 946a Condition 5: Sulfur dioxide (SO_2) emissions from the flue gas scrubber (FGS) shall not exceed 25 ppmv (dry basis, 0% 02, 365-day rolling average) or 50 ppmv (5.0 x 10, dry basis, 0% O_2, 7-day rolling average) as demonstrated by a continuous emissions monitor. Flue gas scrubber stack SO_2 emissions exceeded the allowable limits for 17 days from November 11 to 27, 2006.	$22,100 penalty paid on 7/31/07.

4. ORDERS OF APPROVAL TO CONSTRUCT AND REGULATORY ORDERS

4.1 Obsolete Orders

The following Orders of Approval to Construct (OACs) for specific equipment have been completed and contain no ongoing requirements, have been superseded by more stringent applicable NWCAA regulations, or have been directly superseded by new OACs, and are therefore obsolete and not included in the AOP.

4.1.1 NWCAA OAC 168 (Deisohexanizer, Naphtha Hydrotreater, Catalytic Reformer including regenerator, Multi-Jet Flare, and Storage tank 148) July 9, 1971

The OAC included a list of 1971 NWCAA regulations. The current regulations contained in Section 4 of the AOP and applicable to the subject equipment are more stringent. This OAC was excluded in the original issuance of the AOP and remains excluded for this renewal.

4.1.2 NWCAA OAC 122 (Storage tank 20) October 12, 1973

The OAC permitted Shell to install a floating roof on existing storage tank number 20. Tesoro has installed a floating roof with secondary seals. This OAC was excluded in the original issuance of the AOP and remains excluded for this renewal.

4.1.3 NWCAA OAC 187 (Storage tank 165) October 22, 1976

This OAC was a narrative description that the agency expected Shell to notify the Control Officer in writing when the installation was substantially complete, with all air pollution control components having been installed as well as the date of proposed commencement of operation. The Refinery Manager notified the NWCAA in a letter dated February 28, 1978, that Storage tank 165 would be completed and placed in service about April 1, 1978. The OAC indicated that the facility would be subject to 40 CFR Part 60 Subpart K, Standards of Performance for Storage Vessels for Petroleum Liquids. Subpart K has been superseded by Title 40 CFR Part 63 Subpart CC for storage vessels subject to the Refinery MACT. All continuing requirements applicable to the equipment are addressed under Section 5 of the permit, which incorporates Subpart CC requirements. This OAC was excluded in the original issuance of the AOP and remains excluded for this renewal.

4.1.4 NWCAA OAC 200 (F-102 Crude Oil Heater Combustion Air Preheater) October 14, 1977

This OAC was a narrative description that the agency expected Shell to notify the Control Officer in writing when the installation is substantially complete, all air pollution control facilities have been installed and the date when the facility proposes to commence operation. There are no records in the NWCAA file that indicate that this approval was requested, but it is possible that the records have not survived since 1977. This OAC was excluded in the original issuance of the AOP and remains excluded for this renewal.

4.1.5 NWCAA OAC 214 (Storage tank 166) January 17, 1978

This OAC was a narrative description that the agency expected Shell to notify the Control Officer in writing when the installation is substantially complete, all air pollution control facilities have been installed and the date when the facility proposed to commence operation, and that the equipment was subject to 40 CFR 60 Subpart K. The Refinery Manager notified the NWCAA in letters dated November 15, 1978 and December 18, 1978, that Storage tank 166 would be completed and placed in service by approximately the end of the year. Title 40 CFR Part 60 Subpart K has been superseded by Title 40 CFR Part 63

Subpart CC for storage vessels subject to the Refinery MACT. All continuing requirements, are addressed under Section 5 of the AOP, which incorporates Subpart CC requirements. This OAC was excluded in the original issuance of the AOP and remains excluded for this renewal.

4.1.6 NWCAA OAC 222 (Oil/Water Separator) June 15, 1978

This OAC was a narrative description that the agency expected Shell to notify the Control Officer in writing when the installation was substantially complete, with all air pollution control components having been installed as well as the date of proposed commencement of operation. There are no records in the NWCAA file that indicate that this approval was requested, but it is possible that the records have not survived since 1978. This OAC was excluded in the original issuance of the AOP and remains excluded for this renewal.

4.1.7 NWCAA OAC 268 (F-201 Vacuum Flasher Feed Heater – Combustion Air Preheater) March 25, 1982

This OAC was a narrative description that the agency expected Shell to notify the Control Officer in writing when the installation was substantially complete, with all air pollution control components having been installed as well as the date of proposed commencement of operation. A letter dated March 29, 1982 from the facility to the NWCAA states that the air preheater would be placed in service in the next few days. There are no additional records in the NWCAA file. This OAC was excluded in the original issuance of the AOP and remains excluded for this renewal.

4.1.8 NWCAA OAC 277 (Temporary boiler) March 19, 1990

The OAC allowed the operation of a temporary boiler as a replacement unit with a firing limit of 91 MMBtu/hr using only gaseous fuels. This permit is considered expired by the NWCAA because the unit was shut down and removed from the facility for a period of greater than 2 years.

4.1.9 NWCAA OAC 278 (Catalyst Storage Hopper Vents – Cyclone Separators) April 14, 1983, Revised April 21, 1983

This OAC was a narrative description that the agency expected Shell to notify the Control Officer in writing when the installation is substantially complete, all air pollution control facilities have been installed, and the date of proposed operation. There are no additional records in the NWCAA file. This OAC was excluded in the original issuance of the AOP and remains excluded for this renewal.

4.1.10 NWCAA OAC 308 (Improve Energy Utilization at the Refinery Crude Unit – Vacuum Flasher) February 20, 1986

The approval conditions in the OAC required the facility to submit an operating procedures document to the Control Officer defining measures to maintain compliance with NWCAA emission standards during periods of sulfur curtailment (by the associated sulfuric acid/ sulfur recovery plant, at the time owned and operated by Allied Chemical, now General Chemical). The OAC also required the facility to implement those procedures immediately if sulfur intake was stopped by General Chemical. This document required approval by the Control Officer on the basis that it represents operating conditions that will result in no overall net increase of sulfur dioxide emissions. Facility managers submitted a refinery H_2S Curtailment Operation Plan to the NWCAA on September 15, 1986. The Plan was discussed with the Control Officer on February 20, 1986. On October 16, 1986, the Control Officer wrote that he had inspected the new equipment and found the September 15 document to be acceptable. On May 25, 1995, the facility requested a revision to the Plan, which they called the “General Chemical Curtailment Action Plan”. The Control Officer approved the new plan on June 16, 1995. The plan was updated January 2008 to reflect changes after

starting up projects permitted under OAC 952a. This OAC has been superseded by OAC 308a, issued October 14, 2009.

4.1.11 NWCAA OAC 358 (Storage tanks 202 and 203) January 8, 1992

This OAC allowed construction of two 175,000-bbl gasoline storage tanks with external floating roofs and primary and secondary seals. The OAC required testing, reporting, and monitoring requirements specified in 40 CFR 60 Subpart Kb Standards for Performance for Volatile Organic Liquid Storage Vessels. This OAC has been superseded by OAC 358a, issued October 14, 2009.

4.1.12 NWCAA OAC 362b (Wastewater Treatment Plant and Ancillary Facilities) February 7, 1992, Revised April 25, 2000 & October 14, 2009

This OAC permitted construction of modifications to existing facilities and to construct new facilities at the wastewater treatment plant and its ancillary facilities, as well as specific storage tanks and the marine loading wharf. Installation of controls in conformance with 40 CFR Part 61 Subpart FF was required for all affected sources at the time of the permit, consistent with the applicability of the regulation. Tesoro submitted initial notification under Subpart FF in 1993; the regulation remains applicable to the facility. The OAC is considered obsolete by the NWCAA and has been excluded from the AOP.

4.1.13 NWCAA OAC 1050a (Modification of Gas Recovery/Alkylation, Isomerization, and Naphtha Hydrotreater Units & 100,000 Barrel Naphtha Tank No. 231) May 4, 1993, Revised October 30, 2009

Two OACs were issued as part of the facility's Clean Fuels project addressing the gas recovery and naphtha hydrotreater (NHT) unit modifications and allowed construction of one 100,000 bbl, external floating roof naphtha tank 231. No number was originally assigned to the orders. The orders were issued in response to a single application submitted by the facility. Tank was noted as subject to federal New Source Performance Standards 40 CFR 60.110b-117b Subpart Kb as well as NWCAA Regulation 580.9 – High Pressure Organic Compound Storage in External Floating Roof Tanks. 40 CFR Part 60 Subpart GGG applicability in the NHT has been superseded by 40 CFR Part 63 Subpart CC for equipment components. All continuing requirements of the NWCAA regulation and federal regulations are addressed under Section 5 of the AOP, which incorporates Subpart Kb requirements on tank 231 and Subpart CC requirements for the NHT unit. This OAC has been excluded from the AOP.

4.1.14 NWCAA OAC 517 (Butane Isomerization Unit) September 7, 1994, Revised November 4, 1994

This OAC allowed construction of a butane isomerization unit. The permit indicated the regulations applicable to the butane isomerization unit. The revision deleted the provisions for a new storage tanks that was not constructed. This OAC was superseded by OAC 1031 and therefore excluded from the AOP.

4.1.15 NWCAA OAC 651a (Pressure Vessels Nos. 134 and 135) March 16, 1998, Revised October 14, 2009

This OAC allowed construction of two new pressure vessels (134 and 135) in the diesel hydrotreater (DHT). Equipment components were subject to 40 CFR Part 60 Subparts GGG and A. Title 40 CFR Part 60 Subpart GGG applicability has been superseded by Title 40 CFR Part 63 Subpart CC for equipment components in the DHT and CFH. All continuing requirements are addressed under Section 5 of the AOP, which incorporates Subpart CC requirements. The facility has submitted the startup notification for the project (4/29/98). This OAC has been excluded from the AOP.

4.1.16 NWCAA OAC 705 (Jet Fuel Treater) August 10, 1999

This OAC allowed construction of a Merichem Mericat II jet fuel treater (JFT). The permit application stated that the project would not impact the refinery crude oil throughput capacity. Although the project required a reallocation of storage tank services, the low vapor pressure of jet fuel exempts any tanks storing jet fuel from becoming subject to the National Emission Standards for Hazardous Air Pollutants from Petroleum Refineries 40 CFR Part 63 Subpart CC. The components added by this project were subject to *applicable* sections of Subpart GGG, as stated in Condition 1. Title 40 CFR Part 60 Subpart GGG applicability has been superseded by Title 40 CFR Part 63 Subpart CC for equipment components in the JFT. All continuing requirements are addressed under Section 5 of the AOP, which incorporates Subpart CC requirements for the JFT unit. Condition 2 notes two new drain hubs are subject to *applicable* sections of 40 CFR Part 60 Subpart QQQ, which is covered by the underlying rule applicability. The facility submitted the notification of startup in accordance with Condition 3. This OAC has been excluded from the AOP.

4.1.17 NWCAA OAC 750a (Tank 3) May 4, 2001, Revised October 14, 2009

This OAC allowed installation of a crude oil pump (located on the tank farm hill) and heating of Tank 3, an external floating roof tank. The project was proposed to improve crude oil storage flexibility and transfer operations. The project proposed an increase in potential throughput of crude oil delivery to the crude distillation unit from 143 to 149 thousand barrels per day. Emissions associated with this potential throughput increase, and pollutants potentially released from the project's increased steam demand were considered during review of the proposed project. According to the permit application, the project was not linked to the concurrent Residue Reduction Project at the refinery. The new pump and piping required installation of valves and connectors, which will emit volatile organic compounds (VOCs). These components and the pump are subject to Leak Detection and Repair (LDAR) requirements under 40 CFR 63 Subpart CC, the National Emission Standards for Hazardous Air Pollutants from Petroleum Refineries, and the general requirements of 40 CFR 63 Subpart A. BACT for the equipment components was determined to be inclusion of the equipment in the facility's leak detection and repair program. The facility submitted the notification of startup. This OAC has been excluded from the AOP.

4.1.18 NWCAA OAC 753 (Catalytic Cracking Unit) December 14, 2001 Revised: April 4, 2002, November 24, 2003, and August 6, 2004,

This OAC allowed modification of the catalytic cracking unit (CCU) from a combination fluidized bed reactor and riser reactor to a unit with two riser reactors. The catalytic cracking unit's feed rate on December 5, 2001 was 45,000 barrels per day fresh feed and 1,500 barrels per day recycle. The project also included revisions to the CCU fractionator 2 and installation of sulfur dioxide control equipment and a catalyst cooler for heat recovery. The catalytic cracker regenerator's combustion air supply is enriched with oxygen. This OAC was superseded by OAC 946/946A.

4.1.19 NWCAA OAC 765 (Twelve Diesel-Powered Generators) April 23, 2001

This OAC allowed installation of twelve diesel-powered generators for a short time period – removal by August 31, 2001. The generators were removed from the site. All emissions of nitrogen oxides, particulate matter and sulfur oxides were mitigated; completed in October 2002.

4.1.20 NWCAA OAC 769 (Eighteen Gas-Fired Generators) May 23, 2001 Revised: November 28, 2001 and April 21, 2003.

These generators were installed and subsequently removed.

4.1.21 NWCAA OAC 873 (Wet gas scrubber installation on catalytic cracking unit) August 24, 2004.

This OAC allowed the installation of the flue gas scrubber on the CCU. The review of the project was not BACT, because the project qualified as a "substantial alteration of control equipment" under NWCAA Regulation 300.13, which requires only reasonable limitations on operation and maintenance. This OAC has been superseded by OAC 946/946a.

4.1.22 NWCAA OAC 1009 (Temporary Boiler) November 1, 2007 – expired April 28, 2008

This temporary order approved a 6-month installation of a boiler at the Tesoro facility during a planned boiler outage. The temporary boiler produced 120,000 lb/hr of steam combusting natural gas or treated propane (146 MMBtu/hr heat input). This OAC has been excluded from the AOP because it is expired.

4.2 Effective Orders

The following Orders of Approval to Construct (OAC) and Regulatory Orders for specific equipment are currently valid at the facility and included in the AOP. Within the valid orders are conditions that are excluded from the AOP for several reasons. Each permit section identifies terms that have been excluded and reasons for their exclusion.

Historically, OACs have been issued that include reiterations of federally applicable regulations. These federal rule permit conditions may or may not constitute best available control technology at the time of permitting. Where the federal rule applies to the subject equipment, the AOP terms are the most up-to-date version of the applicable federal rule and the OAC referencing the rule has been included as a secondary reference.

4.2.1 NWCAA OAC 308a, October 14, 2009

The approval conditions in the OAC stem from the original permit requiring the facility to submit an operating procedures document defining measures to maintain compliance with NWCAA emission standards during periods of sulfur curtailment [by the associated sulfuric acid/ sulfur recovery plant; General Chemical]. The plan was updated January 2008; approved on June 10, 2008 by NWCAA. The most recent plan is reproduced below:

Tesoro Anacortes Refinery - H_2S Curtailment Plan (submitted to NWCAA 1-16-08)

An H_2S Curtailment is a situation in which an unplanned event requires a reduction of H_2S ("acid gas") being transferred from Tesoro to General Chemical, to avoid or minimize (i.e. mitigate) the flaring of acid gas.

The steps listed in Table 1 are implemented during H_2S curtailments for the purpose of mitigating acid gas flaring. Many of the steps take several hours to implement and additional hours for the reduction of H_2S production to be realized. The steps can be taken sequentially, simultaneously or in another order depending upon the severity of the curtailment or other process constraints at the time of the curtailment.

Table 1
Acid Gas Flaring – Mitigation Steps

1	Route untreated RA dry gas to fuel gas.
2	Eliminate fuel oil burning.
3	Cut the temperature of both CCU risers to 975°F.
4	Switch to a lower sulfur crude diet.
5	Reduce total CCU feed, as necessary, to minimum stable rate.
6	Increase sweet feed to the CCU, if available.
7	Place the DHT on complete recycle.

Each H_2S curtailment is recorded on a worksheet and retained in the files. The NWCAA is notified of each H_2S curtailment, regardless of an emission standard exceedance.

4.2.2 NWCAA OAC 358a (Storage tanks 202 and 203), October 14, 2009

This OAC affects two 175,000-bbl gasoline storage tanks (202 and 203); equipped with external floating roofs and primary and secondary seals. The OAC limits the maximum true vapor pressure of material stored in the tanks to 11.1 psia.

4.2.3 NWCAA OAC 390e (Boiler F-753), April 26, 1993. Revised May 18, 1993, July 12, 1993, October 4, 1993, January 12, 1995 and December 19, 2007

This OAC allowed construction of F-753 (220-MMBtu/hr heat input capacity) gas/oil-fired boiler and ancillary equipment. However, F-753 was never equipped to burn oil. 40 CFR Part 60 Subpart Db applies to the unit and requires continuous monitoring for NO_X emissions using a CEM or an equivalent method approved by EPA and NWCAA. An alternative predictive emissions monitoring system (PEMS) was proposed and subsequently approved on October 20, 1996 by EPA. The boiler is also subject to 40 CFR Part 60 Subpart J under a determination by EPA Region 10 that propane generated by the refinery and combusted as a secondary fuel fits the definition of a refinery "fuel gas." Initial performance waivers and propane H_2S alternative monitoring were granted by EPA Region 10 on May 14, 1996. In the most recent revision, the PEMS was replaced by a CEMS as part of an enforcement

action and the allowance for the unit to burn oil was also removed because the fuel oil system was never constructed.

4.2.4 NWCAA OAC 633a (Equilibrium Catalyst Addition System) January 28, 1998, Revised March 3, 2006

This OAC allowed a modification to the catalytic cracking unit (CCU), consisting of a new equilibrium catalyst addition system, a new catalyst hopper, a baghouse filtration system (BACT), controls, and associated piping. The project did not impact unit throughput capacity or product yield of the CCU. The modification aligned the provisions of the equilibrium catalyst hopper V-353 with other more recent permit conditions applicable to similar sources. The conditions of OAC 633a do not reflect any physical or operational changes to the unit or the stringency of the requirements. The revised OAC supersedes OAC 633.

4.2.5 NWCAA OAC 649b (Asphalt Binder Tanks Nos. 248 and 247) March 17, 1998, Revised May 7, 2001 & October 14, 2009

This OAC modification permitted the installation of new equipment and modification of existing equipment for the manufacture of Asphalt Binder, the hydrocarbon component of commercial asphalt pavement. Existing asphaltic streams are stored, blended with cutter stock, and loaded into trucks and railcars at a new truck rack and a new rail car rack. Revisions to the Crude Distillation/Vacuum Flashing area's heat exchange train were made and a new transfer line to the wharf was installed for barge loading of asphalt. Equipment added included two 20,000 barrel heated fixed roof tanks (Tank 248 for asphalt cutter and Tank 247 for asphalt/cutter blending), a new wharf transfer line, truck and rail car racks, five new oil/water sewer system connections, valves, flanges, and pumps. In order to provide Asphalt Binder loading surge capacity, the service of an existing tank, Tank 34, was switched from Marine Fuel Oil storage to Asphalt Binder storage (a reduction in volatile organic compound emissions). Another existing Marine Fuel Oil tank, Tank 36, was made available for Asphalt Binder storage on a supplemental basis, if needed. Based on the compliance history reviewed by NWCAA, the facility has never observed opacity from the loading operation. Semiannual monitoring was incorporated into the AOP.

4.2.6 NWCAA OAC 725b (Flare Gas Recovery Compressor) June 12, 2000. Revised September 24, 2002 and July 10, 2007.

This OAC allowed construction of a 500 standard cubic foot/minute two-stage rotary vane flare gas recovery compressor (J-887) replacing the less efficient compressor (J-815), which remained as a maintenance backup unit until 2007. The new J-887 compressor is equipped with a heavy oil barrier fluid seal system; the project included associated valves, flanges and other components. The valves, flanges, and other components are considered part of the existing closed vent system and are included in the facility's monitoring of the flare system. The application states that the project does not alter the throughput capacity of any other process units at the refinery. Revision a allowed for both compressors to operate during ROSE unit compressor maintenance. Revision b reflects the removal of J-815 and fulfilled initial requirement language. Condition 1 is the only referenced provision from this permit and imposes new source requirements on the compressor under 40 CFR part 63 Subpart CC. The compressor and other equipment installed would otherwise have been considered 'existing' under the regulation. The compressor was installed with appropriate seals to meet the requirements. Conditions 2, 3, and 4 impart no requirements beyond applicable requirements.

4.2.7 NWCAA Regulatory Order 26 (Heater F-101 low-NO_X burner installation) August 22, 2000

Heater F-101 was retro-fitted with low-NO_X burner technology as part of a PSD offset project for OAC 753 (see the obsolete orders section of this statement of basis). This regulatory order did not require any stack testing to confirm NO_X emissions. Concurrent NO_X and CO performance testing on a five-year interval has been added to the AOP in accordance with the NWCAA gapfilling authority.

4.2.8 NWCAA OAC 744a (Residuum Oil Supercritical Extraction - ROSE) March 7, 2001 Revised March 3, 2009

This OAC allowed installation of a Residuum Oil Supercritical Extraction (ROSE) unit to upgrade heavy residual oils to catalytic cracking unit feed. The project was part of a residue reduction project which also included revisions to the catalytic cracking unit and associated support equipment. The catalytic cracker unit revisions, although permitted separately under the OAC 753 series, were considered contemporaneous with the ROSE project for applicability of Prevention of Significant Deterioration (PSD) purposes. Conditions 1 and 3 noted NESHAP applicability. Conditions 4 and 6 are covered by other provisions applicable to the ROSE unit. Conditions 2 and 5 were completed: Notification correspondence dated February 7, 2002. Conditions 7, 8, and 9 were completed as of third quarter of 2005. Condition 10 has been met: Initial notification on September 27, 2001. Revision 744a dropped the completed conditions and aligned the enhanced LDAR program to a 60 Subpart VV-based system. The condition requiring the ROSE unit not to exceed 173-460-150 and 160 is retained in 744a but is not included in the AOP because the requirement was met at the time of permitting and there is no ongoing demonstration of compliance requirement.

4.2.9 NWCAA OAC 768 (Diesel-Powered Generator) May 15, 2001

This order allowed the installation of one diesel fuel-fired emergency generator (rated 465 hp). The generator, with engine model Cummins NTA855-G2, is identified as GEN763.

4.2.10 NWCAA OAC 827b (Low-sulfur gasoline phase 1) May 22, 2003, Revised February 16, 2005 and June 2, 2009.

The low-sulfur gasoline project included modifications of the cat gasoline splitter (CGS), F-104 reboiler, naphtha hydrotreating (NHT) catalytic reformer (CR), and amine treatment unit (ATU). Requirements of 40 CFR Part 60 Subpart GGG and Part 63 Subpart CC apply to equipment components installed as part of this project. BACT requirements in the permit were enhanced LDAR based on 40 CFR Part 60 Subpart VV. These requirements are included in the AOP. Condition 1 of the permit restricts fuel use in the F-104 reboiler, the F6600 and F6601 heaters, and the F6650, F6651, F6652, F6653, and F6654 heaters to only pipeline grade natural gas, and/or refinery fuel gas. However, these units are not capable of burning any other fuels at the time of permitting and would require permitting for the modification. There are no compliance provisions for this restriction; therefore, the condition has not been translated into the AOP.

4.2.11 NWCAA OAC 896a (Low Sulfur Gasoline Phase 2) December 24, 2004 Revised March 3, 2009

OAC 896 allowed the installation of Phase 2 of the Low Sulfur Gasoline (LSG) Project. The emissions were contemporaneously evaluated with OAC 827a (LSG Phase 1). The project modified the cat gasoline splitter and converted the cat feed hydrotreater to the clean fuels hydrotreater. OAC 896 startup was October 2005. Revision 896a aligned the LDAR program to a 40 CFR Part 60 Subpart VV based system. Obsolete terms involving the original LDAR program were removed.

4.2.12 NWCAA OAC 901a (Ultra Low Sulfur Diesel) February 1, 2005 Revised March 3, 2009

OAC 901 allowed the installation for the alteration of the existing distillate hydrotreater (DHT) to meet the diesel sulfur specifications mandated by the U.S. EPA. The DHT project started up in March 2006. The enhanced LDAR provisions were the primary subject of the 2009 revision OAC 901a to coordinate the facility programs. Completed provisions from the original permit were also dropped. Initial LDAR monitoring was completed in 2006 and off-plot equipment was incorporated into exiting LDAR programs.

4.2.13 NWCAA OAC 946a (Catalytic Cracking Unit) November 15, 2005 Revised April 6, 2006

OAC 946 superseded OAC 753d and OAC 873. Applicable conditions from both permits were consolidated and updated to reflect the current CCU operating configuration with a flue gas scrubber (FGS). The OAC 753 series authorized projects at the CCU and applied best available control technology (BACT) for minor new sources, while providing limits to avoid review under federal requirements for criteria pollutants: 40 CFR Part 60 New Source Performance Standards (NSPS) Subpart J and 40 CFR Part 52 – prevention of significant deterioration (PSD). OAC 873 permitted the installation of the FGS as the facility-elected control option for achieving compliance with 40 CFR Part 63 Subpart UUU and established appropriate limits and monitoring for SO_2 emissions. The FGS treats the combined exhaust of carbon monoxide boilers (COBs) 1 and 2, reducing particulate matter (PM) and sulfur dioxide (SO_2) emissions. The CCU system retains a diversion stack (formerly COB 1 stack).

OAC 946a aligned the conditions of the catalyst additive hopper V-356 with permit conditions applicable to the other catalyst hoppers at the facility. The original approval for construction of the catalyst additive system was granted in OAC 753, issued in 2001. BACT was determined at that time to be the installation of a baghouse. This monitoring change does not change the stringency of any condition.

4.2.14 NWCAA OAC 947 (Catalytic Cracking Unit) November 15, 2005 Revised December 19, 2005

OAC 947 allowed the replacement of two existing cyclones with new baghouses on catalyst hoppers (V-307 and V-308) in the catalytic cracking unit (CCU). These hoppers were originally installed at the facility in 1955 and upgraded in 1983 and 1984 by addition of cyclone separators and an equalizing line to meet NWCAA particulate emissions regulations. Hopper V-307 is used for receipt and storage of fresh CCU catalyst offloaded from rail cars by pneumatic transfer. Hopper V-308 receives spent catalyst from the CCU regenerator, also by pneumatic transfer. The hopper cyclones were replaced by passive baghouses for control of emissions of particulate matter during transfer operations. The baghouses are each equipped with differential pressure gauges. The gauges are to be available for diagnostic purposes in the event of observed excess emissions. OAC 947a aligned the conditions of the catalyst hopper baghouses with permit conditions applicable to the other catalyst hoppers at the facility. Tesoro determined that the CAM rule (40 CFR Part 64) applies to the baghouses. A discussion of CAM is included in the federal requirements section below.

4.2.15 NWCAA OAC 952b (Amine treatment modifications and sulfur handling) March 31, 2006 Revised May 15, 2007 and March 3, 2009

OAC 952 allowed the modification of the amine treatment unit expanding sulfur capacity and the installation of a sulfur recovery unit at the facility. The 2007 revision abandoned the construction of the SRU and replaced the required capacity with an expanded line to access the available capacity at the adjacent sulfuric acid/sulfur recovery facility (currently operated by General Chemical). The project included a process vent and equipment

components subject to Part 63 Subpart CC. Equipment components are also subject to 40 CFR Part 60 Subpart GGG provisions in conjunction with enhanced LDAR provisions under the BACT determination.

OAC 952a included a one-time requirement for testing of F-751 and F-752 utility boilers to establish NO_X emissions factors (condition 1). The provision was not included in the AOP terms because there are no ongoing compliance demonstration requirements. The NO_X emissions from the project exceed 50% of the PSD significance emissions rate triggering 40 CFR §52.21(r)(6) monitoring and annual reporting to the NWCAA for 5 years from project startup (OAC 952a; condition 9 – which was retained in OAC 952b as condition 5).

OAC 952b modification removed complete actions from revision a and aligned the enhanced LDAR requirements to a 40 CFR Part 60 Subpart VV based system.

4.2.16 NWCAA OAC 989a (Selective Hydrogenation Unit) June 7, 2007 Revised March 3, 2009

OAC 989 allowed the initial construction of the selective hydrogenation unit (SHU). The SHU processes CCU gasoline prior to hydrotreating. The unit is within the zone A operations processing CCU debutanizer bottoms in route to the CGS column. Equipment components are subject to 40 CFR Parts 63 CC and 60 Subpart GGG provisions in conjunction with enhanced LDAR provisions under the BACT determination. The enhanced LDAR provisions were the subject of the 2009 revision OAC 989a to coordinate the facility program. Process sewer components in the SHU are subject to 40 CFR Part 60 Subpart QQQ.

4.2.17 NWCAA OAC 1031 (Butane Isomerization Unit) January 20, 2009

OAC 1031 approved an optimization project in the butane isomerization unit that resulted in a throughput increase and steam consumption rate increase. The permit requires recordkeeping and reporting of facility-wide fuel oil use limit. The project started up on February 2, 2009 with a written notification as required. OAC 1031 supersedes OAC 517.

4.2.18 NWCAA OAC 1037 (Benzene Saturation Unit) June 19, 2009

OAC 1037 approves the construction of a gasoline benzene reduction unit at the facility. The unit was installed to meet the US EPA mobile source air toxics phase 2 (MSAT2) gasoline requirements. The project retasks column C-6601 and associated heater F-6602 (73.5 MMBtu/hr) back on line after several years of moth-balling.

5. EMISSIONS

The following emissions information has been provided by Tesoro and checked by Agency personnel.

5.1 Criteria Pollutants in tons per year

Criteria Air Pollutant	2003	2004	2005	2006	2007	2008
PM	961	820	681	211	204	212
PM_{10}	925	799	652	205	196	212
$PM_{2.5}$	104	76	64	64	70	100
SO_2	6,457	5,972	5,575	3,298	1,177	605
NO_X	2,436	2,581	2,257	2,364	2,321	2,089
VOC	1,654	1,511	1,457	1,315	1,480	1,082
CO	742	847	645	823	819	617

5.2 Toxic Pollutants in pounds per year

Toxic Air Pollutant	2003	2004	2005	2006	2007	2008
1,1,1-tetrachloroethane			3	3	3	3
1,2,3-trimethylbenzene	31	27	29	29	38	36
1,2,4-trimethylbenzene	2,185	2,155	2,195	2,774	2,308	1,244
1,3,5-trimethylbenzene	0	51	51	51	75	72
1,3-butadiene	117	155	166	120	106	753
1-methoxy, 2-propanol			6	0	0	0
1-butanol	27	500	120	120		
2,2,4-trimethyl-pentane	25,022	37,030	37,160	34,850	34,526	12,516
4,4-diphenylmethane diisocynate			8	0	0	7
2-propoxyethanol	12	2	15	0	2	48
Acetaldehyde	522	251	241	236	225	420
Acrolein	386	119	120	92	74	75
Aldehydes	600	500	462	680	490	1
Ammonia	14,000	6,241			2,000	1,314
Antimony	501	506	472	128	132	130
Aromatic hydrocarbons, as POM	62	0	2	2		
Arsenic	425	419	391	106	105	108
Barium	63	68	65	59	73	47
Benzene	13,774	14,790	15,254	13,386	13,356	11,902
Benzo(a)pyrene	10	10	12	17	12	0
Benzyl alcohol			60	4	0	36
Beryllium	1	0				
Biphenyl			0	11	11	11
Butane	331,267	441,950	506,060	397,790	316,946	260,087
Butyl alcohol(-n)			280	135	123	0
Butylene			500	0	0	0
Cadmium			16	12	12	10
Carbon disulfide	80	15	14	20	14	0
Carbonyl sulfide	6,000	1,220	1,090	1,600	1,120	0
Chlorine	4,000	1,100	920	680	4,500	0

Toxic Air Pollutant	2003	2004	2005	2006	2007	2008
Chloroethane	4	0				
Chloroform	80	51	51	29	24	286
Chromium	67	40	38	22	21	22
Chromium (iii) ion		4	2	1	0	0
Cobalt	40	44	45	13	13	13
Copper	50	37	37	27	32	39
Cresols	1,000	1,000	1,000	1,000	3,000	1,335
Cumene	771	830	652	642	186	235
Cyclohexane	16,710	14,497	15,030	13,050	13,369	12,313
Cyclohexene			7	7	7	3
Cyclohexanol			0	65	5	19
Cyclopentane	1,227	3,626	4,016	4,146	6,326	4,559
Decane		3,000	2,900	2,100	2,500	1,994
Diethylamine	200	200				210
Ethane	5,001	6,750	11,100	6,600	9,140	7,722
Ethanol	10	270	150	75	10	0
Ethyl 3 ethoxypropionate					2	0
Ethylbenzene	17,128	9,226	6,815	6,697	7,822	5,822
Ethylene	9,000	9,000	9,540	9,800	8,800	10,954
Ethylmercaptan			40	40	80	42
Formaldehyde	1,216	1,546	782	625	683	1,733
Furfural alcohol			30	2	0	4
Glycoether	40	320	30	55	89	0
Heptane	14,290	20,530	20,840	19,533	21,563	18,326
Hexane	44,267	74,550				
Hexane isomers	0	600	167,730	137,915	200,733	151,426
Hydrogen fluoride			2	2	2	2
Hydrogen sulfide	17,060	14,011	13,071	14,082	14,420	13,146
Hydrogen chloride	156	3				
Iron			4	4	4	3
Isobutane	12,000	63,405	6,030	5,980	8,401	2,326
Isopentane					110	0
Isopropyl alcohol	280	830	450	460	259	138
Lead	95	80	79	23	23	35
Manganese	219	206	211	103	113	66
Medium aromatic hydrocarbons					28	8
Mercury	40	40	41	10	10	10
Methane	3,000	6,240	7,800	5,370	10,050	6,027
Methanol	3	123	123	103	83	134
Methyl amyl ketone			0	2	100	33
Methyl ethyl ketone	1,640	5,500	1,470	2,370	2,160	0
Methylcyclohexane	3,850	4,140	5,140	5,310	5,039	7,485
Methyl isobutylketone	0	0				29
Methyl diethanolamine			0	1,000	2,000	1,043
MTBE	200	0				
Naphthalene	2,092	2,350	1,582	1,577	1,590	2,156

Toxic Air Pollutant	2003	2004	2005	2006	2007	2008
Nickel	1,603	1,401	1,348	467	702	363
Nonane, n-	6,468	9,476	8,380	7,570	8,004	5,464
Octane	21,210	18,260	17,420	15,800	16,529	12,830
PAHs			15	11	11	22
Pentane	82,808	92,892	89,392	85,587	115,488	96,631
Phenol	637	635	534	538	1,044	712
Phenol methanol						42
Phosphorus			14	11	13	70
Polynuclear aromatic hydrocarbons			2	2	2	2
Polytetrafluoroethylene			20	5	0	0
Propane	144,002	118,900	116,090	111,430	92,600	105,113
Propylene	21,073	21,319	22,719	22,226	13,462	12,166
Pseudocumene			0	2	0	0
P-toluene sulfonyl isocyanate					19	4
Selenium	52	28	27	14	10	6
Silver	11	12	12	13	15	0
Styrene					97	0
Sulfuric acid	518,025	435,025	362,011	223,119	169,830	57,645
Tetrachloroethylene	1,000	1,000	1,000	1,000	1,000	0
Thallium		58	63	58	72	26
Tin		40	41	10	10	11
Toluene	43,742	37,704	37,127	35,252	34,336	31,164
Trimethylbenzene		100	250	170	200	110
Vanadium	1,822	1,821	1,677	420	419	517
Xylene	41,250	41,430	36,441	30,439	33,732	28,769
Zinc	364	378	366	312	359	1212

5.3 Greenhouse gas estimates in tons per year

Greenhouse gas	2002	2003	2004	2005	2006	2007	2008
CH_4 (methane)	90	92	✱	✱	180	19	22
CO_2 (carbon dioxide)	1.31×10^6	1.49×10^6	✱	✱	1.39×10^6	1.6×10^6	1.37×10^6
N_2O (nitrous oxide)	15	14	✱	✱	15	17	18

✱ Data is not available

6. FEDERAL REQUIREMENTS

The Tesoro Refining and Marketing Company owns and operates equipment regulated under several federal regulations.

6.1 New Source Performance Standards (NSPS)

New Source Performance Standards (NSPS) establish minimum performance standards for equipment based on construction and modification dates. General provisions apply to all affected facilities and are included in Section 4 of the AOP.

Part 60 Subpart A – General Provisions

Part 60 Subpart Db – Standards of Performance for Industrial-Commercial-Institutional Steam Generating Units

Part 60 Subpart J – Standards of Performance for Petroleum Refineries

Part 60 Subpart Kb – Standards of Performance for Volatile Organic Liquid Storage Vessels (Including Petroleum Liquid Storage Vessels) for Which Construction, Reconstruction, or Modification Commenced After July 23, 1984.

Part 60 Subpart UU – Standards of Performance for Asphalt Processing and Asphalt Roofing Manufacture

Part 60 Subpart GGG - Standards of Performance for Equipment Leaks of VOC in Petroleum Refineries for which Construction, Reconstruction, or Modification Commenced After January 4, 1983, and on or Before November 7, 2006

Part 60 Subpart GGGa - Standards of Performance for Equipment Leaks of VOC in Petroleum Refineries for Which Construction, Reconstruction, or Modification Commenced After November 7, 2006

Part 60 Subpart QQQ – Standards of Performance for VOC Emissions from Petroleum Refinery Wastewater Systems

6.1.1 Subpart A – General Provisions

If a New Source Performance Standard in 40 CFR Part 60 applies to a facility, Subpart A also applies. Some of the requirements from Subpart A have been included in the permit, and some have not. If a requirement is applicable when triggered by some action, it was not included in the permit. Similarly, if a part of Subpart A did not have concrete requirements for the facility (i.e., if it solely addressed applicability or definitions), it was not included. If the requirement was something in the past, or addressed something that a regulatory agency must do, it was not included. The fact that these parts were not included in the permit does not exempt the facility from the requirements.

These requirements were placed in Section 3.1 and in the appropriate Section 5 tables of the AOP in an earlier version of the AOP and have not been moved or reorganized as part of the AOP renewal.

6.1.2 Subpart Db – Standards of Performance for Industrial-Commercial-Institutional Steam Generating Units

Subpart Db establishes NSPS for boilers that were constructed, modified, or reconstructed after June 19, 1984 with a heat input capacity greater than 100 million British thermal units per hour (MMBtu/hr). One unit at the refinery, the 220 MMBtu/hour natural gas/propane boiler (F-753), is subject to this NSPS. The boiler is permitted in a federally enforceable Order of Approval to Construct (OAC) to combust natural gas and propane produced at the refinery. Permit requirements have been included as specifically applicable in Section 5 of

the permit. When the boiler combusts natural gas and propane, nitrogen oxide emission standards in Subpart Db apply. Tesoro operates a CEMS to continuously monitor nitrogen oxide emissions. Finally, the boiler does not have a duct burner and is not limited by a low annual capacity factor.

The NSPS Subpart Db requirements for Unit F-753 are contained in Section 5.7 of the AOP.

6.1.3 Subpart J – Standards of Performance for Petroleum Refineries

Subpart J establishes new source performance standards for fluid cracking unit catalytic (FCC) regenerators and fuel gas combustion devices which are constructed or modified after June 11, 1973. One unit at the refinery, the 220 MMBtu/hour natural gas/propane boiler (Unit F-753), is subject to this NSPS when burning propane fuel. The NSPS Subpart J requirements for Unit F-753 are contained in Sections 5.7 and 7.1[1] of the AOP.

The FCC unit at Tesoro is not subject to Subpart J because it has not undergone modification or reconstruction as defined in the regulation.

6.1.4 Subpart Kb – Standards of Performance for Volatile Organic Liquid Storage Vessels (Including Petroleum Liquid Storage Vessels) for Which Construction, Reconstruction, or Modification Commenced After July 23, 1984.

Subpart Kb establishes new source performance standards for each storage vessel (tank) with a capacity greater than or equal to 75 cubic meters (gallons) that is used to store volatile organic liquids (VOL) for which construction, reconstruction, or modification is commenced after July 23, 1984.

Table 6-1 NSPS Subpart Kb applicable tanks

Tank No.	Recent Service	Size	Max. Vapor Pressure
202	Gasoline	7.56 MM gallons	>0.75 psia
203	Gasoline	7.56 MM gallons	>0.75 psia
231	Heavy Aromatic Naphtha	111,000 gallons	>0.75 psia

Tanks 202, 203, and 231 are subject to the control requirements of Kb and therefore have external floating roofs with dual seal systems. Other storage tanks installed after July 23, 1984 are exempt, either because they are pressure vessels, their capacity is less than regulatory thresholds, or they do not store volatile organic solvents.

All of these storage vessels are subject to Order of Approval to Construct conditions that are addressed in other parts of this Statement of Basis and in the permit.

The NSPS Subpart Kb requirements for Tanks 202, 203, and 231 are contained in Section 5.6 of the AOP. See the Part 63 Subpart CC section for overlap information.

6.1.5 Subpart UU – Standards of Performance for Asphalt Processing and Asphalt Roofing Manufacture

On February 12, 1998 the facility submitted a “Notice of Construction and Application for Approval” to add new equipment and modify existing equipment for the manufacture of Asphalt Binder, the hydrocarbon component of commercial asphalt pavement. Existing asphaltic streams will be stored, blended with cutter stock, and loaded into trucks and

[1] Alternate Plan for monitoring SO_X from propane combustion unit F-753

railcars at a new truck rack and a new rail car rack. Equipment added included two 20,000 barrel heated fixed roof tanks (Tank #248 for asphalt cutter and Tank #247 for asphalt/cutter blending) that were subject to this regulation. The facility demonstrated initial compliance with the regulation by conducting a Method 9 test on July 29, 1998, when zero opacity was observed from the tank vents. Therefore, no mist eliminators were installed. The only requirement of the rule remaining for the tanks is an ongoing opacity limit in section 5 of the AOP.

6.1.6 Subpart GGG – Standards of Performance for Equipment Leaks of VOC in Petroleum Refineries for which Construction, Reconstruction, or Modification Commenced After January 4, 1983, and on or Before November 7, 2006

Subpart GGG establishes new source performance standards for equipment leaks in petroleum refineries. The Tesoro Refining and Marketing Company has constructed, modified, or reconstructed the following process units triggering applicability of this regulation:

- Crude Distillation
- Vacuum Flasher
- Residuum Oil Supercritical Extraction (ROSE)
- Butane Isomerization
- Clean Fuels Hydrotreating (CFH)/Distillate Hydrotreater (DHT)
- Catalytic Cracking Unit
- Selective Hydrogenation (SHU)
- Catalytic Reforming (CR)/Naphtha Hydrotreater (NHT)
- Cat Gas Splitter (CGS)/Jet Fuel Treater (JFT)
- Refinery Flare System

With the exception of the butane isomerization, the equipment within these process units that are subject to Subpart GGG also have the potential to emit hazardous air pollutants and are considered “in HAP service” in accordance with 40 CFR Part 63 Subpart CC (§63.641 definitions) by Tesoro.

The overlap provisions in 40 CFR Part 63 Subpart CC (§63.640(p)) states that, “After the compliance dates specified in paragraph (h) of this section equipment leaks that are also subject to the provisions of 40 CFR parts 60 and 61 are required to comply only with the provisions specified in this subpart”. Therefore, up until August 18, 1998, the equipment in HAP service, as defined by the regulation, in the listed process units were subject to Part 60 Subpart GGG but are now subject to Part 63 Subpart CC. However, equipment in VOC service, but not in HAP service, may remain subject to GGG if the source shows the equipment to be in VOC service. Tesoro implements the work practice standard on a unit-wide basis assuming all equipment components in the Part 63 Subpart CC units are in HAP service.

The amine 2 unit is reported by the facility as a separate unit due to the applicability of enhanced leak detection requirements according to OAC 952b. For federal rule applicability, amine 2 was considered part of the existing amine unit and CCU and is therefore not called out in the GGG applicability. The only remaining unit subject to only GGG is the butane isomerization unit.

Subpart GGG requires compliance with the standards, equivalence determination, test methods and procedures, recordkeeping, and reporting requirements of Subpart VV. The NSPS Subpart GGG requirements are noted as the basis of applicability in those units that are subject.

The implementation of Part 60 Subpart GGG is noted by the applicability citation for the BI unit. For the remaining subject units, combined terms citing both Part 63 Subpart CC and Part 60 Subpart GGG are included noting VOC or HAP service equipment.

6.1.7 Subpart GGGa - Standards of Performance for Equipment Leaks of VOC in Petroleum Refineries for Which Construction, Reconstruction, or Modification Commenced After November 7, 2006

Subpart GGGa establishes new source performance standards for refinery equipment leaks. Similarly to GGG, it imposes the requirements of another subpart; VVa. Subpart GGGa will be triggered at one new unit at the Tesoro refinery: Benzene Saturation (BenSat), permitted in June 2009. The BenSat unit has not yet commenced construction at the time of this permit, but the requirements of GGGa have been incorporated into Section 5.

6.1.8 Subpart VV – Standards of Performance for Equipment Leaks of VOC in the Synthetic Organic Chemicals Manufacturing Industry

Subpart VV establishes new source performance standards for equipment[2] leaks in synthetic organic chemicals manufacturing industry. The Tesoro facility is not a synthetic organic chemicals manufacturer, but the equipment leak provisions of NSPS Subpart GGG and 40 CFR Part 63 Subpart CC – National Emission Standards for Hazardous Air Pollutants from Petroleum Refineries (specifically, 63.648) require equipment subject to Subpart CC to comply with Subpart VV, with specific exemptions. Therefore, Subpart VV acts as the program framework on which regulatory and permitting provisions are based.

Subpart VV requirements for equipment within process units subject to the equipment leak provisions of NWCAA Regulation Section 580, Part 60 Subpart GGG, and 63 Subpart CC are discussed in detail in Section 6 of this Statement of Basis.

6.1.9 Subpart VVa—Standards of Performance for Equipment Leaks of VOC in the Synthetic Organic Chemicals Manufacturing Industry for Which Construction, Reconstruction, or Modification Commenced After November 7, 2006

Subpart VVa establishes new source performance standards for equipment[2] leaks in synthetic organic chemicals manufacturing industry. The Tesoro facility is not a synthetic organic chemicals manufacturer, but the equipment leak provisions of NSPS Subpart GGGa reference this subpart. Tesoro does not have any operating units subject to this regulation at the time of permitting. However, a proposed benzene saturation (BenSat) unit was permitted in June 2009. The AOP includes the requirements for VVa in section 6 as referenced from section 5, with the other common monitoring requirements.

6.1.10 Subpart QQQ– Standards of Performance for VOC Emissions from Petroleum Refinery Wastewater Systems

Subpart QQQ establishes new source performance standards for VOC emissions from individual drain systems, oil-water separators, or aggregate facilities located in petroleum refineries for which construction, modification, or reconstruction is commenced after May 4, 1987. The construction or installation of a new individual drain system shall constitute a

[2] *Equipment* means each pump, compressor, pressure relief device, sampling connection system, open-ended valve or line, valve, and flange or other connector in VOC service and any devices or systems required by this subpart.

modification to an affected facility. For purposes of this paragraph, a new individual drain system shall be limited to all process drains and the first common junction box. The Tesoro Refining and Marketing Company has constructed, modified, or reconstructed many process units, the drain systems of which then became subject to this regulation. As of the date of permit issuance, these units are listed in the Table that appears below.

Under the regulatory overlap provisions of 40 CFR Part 63.640(o), any Group 1 wastewater stream that enters a piece of equipment subject to both Subpart QQQ is required to comply only with Subpart CC. A Group 1 wastewater stream is defined in Subpart CC as, "a wastewater stream at a petroleum refinery with a total annual benzene loading of 10 megagrams per year or greater as calculated according to the procedures in 40 CFR §61.342 of subpart FF of part 61 that has a flow rate of 0.02 liters per minute or greater, a benzene concentration of 10 parts per million by weight or greater, and is not exempt from control requirements under the provisions of 40 CFR part 61, subpart FF". This is the same definition used for nonexempt wastewater streams under Part 61 Subpart FF. Therefore, any of the wastewater streams listed under the process areas mentioned above that are subject to Part 60 Subpart QQQ and Subpart CC, are subject only to Subpart CC. But, the rules state that the owner or operator of a Group 1 wastewater stream shall comply with the requirements of §61.340 through §61.355 of subpart FF. The applicable requirements for benzene-containing wastewater streams for the jet fuel treater, crude distillation, catalytic cracking unit, catalytic reformer/naphtha hydrotreater process area, amine 2, SHU, ROSE, and tanks 202, 203, and 231 are addressed in the discussion of Subpart FF later in this Statement of Basis.

Table 6-2 Process Unit Applicability of Part 60 Subpart QQQ & Part 63 Subpart CC

Process Unit	Part 60 QQQ	Part 63 CC
Crude Distillation Unit	No	☑Yes
Residuum Oil Supercritical Extraction (ROSE) Unit	☑Yes	☑Yes
Jet Fuel Treater	☑Yes	☑Yes
Naphtha Hydrotreater/Catalytic Reformer Process Area	No	☑Yes
Distillate Hydrotreater	☑Yes	☑Yes
Selective Hydrogenation (SHU)	☑Yes	☑Yes
Butane Isomerization	☑Yes	No
Catalytic Cracking Unit	No	☑Yes
Amine 2	☑Yes	☑Yes
Logistics Area (wharf hose drain system)	No	☑Yes
Storage Tank 231	☑Yes	☑Yes
Storage Tanks 202 and 203	☑Yes	☑Yes
Asphalt Binder Storage Tanks 248 and 247	☑Yes	No

The implementation of Part 60 Subpart QQQ is noted by the applicability citation for the each of the units listed in the table with the overlap exemption in the description.

The NSPS Subpart QQQ requirements are contained in a dedicated Table 6.1 of the AOP.

6.2 National Emission Standards for Hazardous Air Pollutants (NESHAPS)

The Tesoro Refining and Marketing Company owns and operates equipment regulated under the following 40 CFR Parts 61 and 63 regulations:

Part 61 Subpart A – General Provisions.

Part 61 Subpart J – National Emission Standard for Equipment Leaks (Fugitive Emission Sources) of Benzene

Part 61 Subpart V – National Emission Standard for Equipment Leaks (Fugitive Emissions Sources)

Part 61 Subpart FF – National Emission Standard for Benzene Waste Operations.

Part 63 Subpart A – General Provisions.

Part 63 Subpart CC – National Emission Standards for Hazardous Air Pollutants From Petroleum Refineries,

Part 63 Subpart UUU - National Emission Standards for Hazardous Air Pollutants for Petroleum Refineries: Catalytic Cracking Units, Catalytic Reforming Units, and Sulfur Recovery Units

Part 63 Subpart GGGGG – National Emission Standards for Hazardous Air Pollutants: Site Remediation

Since the facility is subject to these NESHAPS, it is also subject to the General Provisions for Parts 63 and 61.

The facility is exempt from Part 63 Subpart Y- National Emission Standards for Marine Tank Vessel Loading Operations. The provisions of the subpart do not apply to marine tank vessel loading operations at existing offshore loading terminals. The facility's docks meet the definition of an offshore loading terminal because the dock extends greater than 0.5 miles from shore.

6.2.1 Part 61 Subpart A – General Provisions

If a National Emission Standard for Hazardous Air Pollutant standard under 40 CFR Part 61 applies to a facility, Subpart A of Part 61 also applies. Some of the requirements from Subpart A have been included in the permit, and some have not. One-time requirements not included in the permit. Similarly, if the part of Subpart A did not have concrete requirements for the facility (i.e., if it solely addressed applicability or definitions), it was not included. If the requirement was something in the past, or addressed something that a regulatory agency must do, it was not included. The fact that these parts were not included in the permit does not exempt the facility from the requirement. The following list contains the parts of Subpart A that were included in either section 3 or section 5 of the permit:

§61.05	§61.12
§61.07	§61.13
§61.09	§61.19
§61.10	

6.2.2 Part 61 Subpart J – National Emission Standard for Equipment Leaks (Fugitive Emissions Sources) of Benzene

Subpart J applies to equipment "in benzene service," which means a piece of equipment that contains or contacts a fluid (liquid or gas) that is at least 10 percent benzene by weight as determined according to the provisions of §61.245(d). Subject equipment includes

pumps, compressors, pressure relief devices, sampling connection systems, open-ended valves or lines, valves, connectors, *surge control vessels, bottoms receivers*, and control devices or systems required by this subpart. For everything on this list, except surge control vessels and bottoms receivers, 40 CFR Part 63, Subpart CC overlaps [40 CFR 63.640(p)] and requires only compliance with Subpart CC. The regulation requires compliance with Part 61 Subpart V for subject equipment.

The only subject unit at the facility has not been built at the time of permitting; a benzene saturation (BenSat) unit. Section 5 of the AOP includes the Subpart J requirements for Subpart J with a requirement to include with the initial notification for the BenSat unit information on methods of compliance with the Subpart J requirements.

6.2.3 Part 61 Subpart V - National Emission Standard for Equipment Leaks (Fugitive Emissions Sources)

Subpart V applies only to equipment that is referenced to the regulation from Part 61 Subpart J. The only applicable requirements may apply to surge control vessels and bottoms receivers in the proposed BenSat unit. The requirements include collecting and controlling emissions from the equipment either back into the process or to a control system. The compliance approach that Tesoro implements when the BenSat unit is constructed is required to be included in the initial notification by the Section 5 term covering this provision.

6.2.4 Part 61 Subpart FF – National Emission Standard for Benzene Waste Operations

Subpart FF was incorporated into the Tesoro in the original version of the AOP. The facility has generally reported total annual benzene (TAB) quantities of less than 10 Mg since 2000. The facility had higher benzene quantities in the 1990s, reporting up to 16 Mg annually. The facility has notified and reported consistently as a subject facility, installing controls and implementing the work practice standards of the regulation. The wastewater treatment plant at the refinery installed covers and carbon canisters for vent treatment in 1992-1993 under OAC 362.

The facility has chosen the 2 Mg compliance option allowed under the regulation. This option allows the facility to manage a limited amount of waste uncontrolled that otherwise would be required to be controlled. Exempted wastes under this option include streams that 1) contain less than 10 ppmw benzene and 2) contain greater than 10 ppmw benzene and have a total annual benzene content not to exceed 2.0 Mg.

The AOP has been updated to include the 40 CFR Part 63 Subpart CC references with Part 61 Subpart FF and requirements have been consolidated into the Oily Wastewater and Benzene Waste Collection and Treatment Section 5.10.

6.2.5 Part 63 Subpart A – General Provisions

The majority of Subpart A of Part 63 has been translated into the AOP in Section 3.3.1. Each Part 63 Subpart applies different sections and paragraphs of Subpart A. Subpart A applicability for Subparts CC and UUU are shown immediately below Subpart A in Sections 3.3.2 and 3.3.3, respectively.

In its December 2008 decision, the U.S. Court of Appeals *Sierra Club v. EPA*, 551 F.3d 1019 (D.C. Cir. 2008) vacated the SSM exemption language in the general provisions of Part 63, Subpart A. The language exempts SSM events from compliance with MACT emission limits. See 40 C.F.R. § 63.6(f) and (h) (the “SSM Exemption”). The vacatur became effective October 16, 2009.

By letter of July 22, 2009, Adam Kushner, the Director of the U.S. EPA Office of Civil Enforcement, issued guidance on how EPA intends to interpret the *Sierra Club* vacatur in the short term. The guidance indicates that the NESHAPs that apply to Tesoro should be unaffected because the regulations apply source-specific startup, shutdown, and malfunction provisions (Subparts CC and UUU) or do not apply any specific emission standards at this time.

6.2.6 Part 63 Subpart CC – National Emission Standards for Hazardous Air Pollutants from Petroleum Refineries

Subpart CC (40 CFR §63.640) establishes national emission standards for hazardous air pollutants (NESHAP) for petroleum refineries. The process units at the facility that are subject to Part 63 Subpart CC emit or have equipment containing or contacting one or more of the hazardous air pollutants listed in the NESHAP. §63.640(c) specifies that for the purpose of this subpart, the affected source shall comprise all emission points, in combination, in an affected process unit for wastewater, miscellaneous process vents, storage vessels, and equipment leaks.

Tesoro submitted the initial notification for Subpart CC on January 14, 1999. The notification included applicability determinations for process equipment includes storage vessels (tanks), miscellaneous process vents, wastewater streams and treatment operations, and equipment leaks.

The process units at the Tesoro facility subject to Subpart CC requirements include:

Crude Distillation

Vacuum Flasher

Residuum Oil Supercritical Extraction (ROSE)

Cat Gas Splitter (CGS)/Jet Fuel Treater (JFT)

Clean Fuels Hydrotreater (CFH)/Distillate Hydrotreater (DHT)

Catalytic Cracking Unit (except process vents)

Selective Hydrogenation (SHU)

Catalytic Reforming (CR, except process vents)/Naphtha Hydrotreater (NHT)

Amine 1 & 2

Alkylation

Refinery Flare System

Tank farm 1

Tank farm 2

Subpart CC requires the classification of storage vessels based on the tank size and service. Group 2 storage tanks are those that are not designated as group 1. Group 1 storage vessel means a storage vessel at an existing source that has a design capacity greater than or equal to 177 cubic meters and stored-liquid maximum true vapor pressure greater than or equal to 10.4 kilopascals and stored-liquid annual average true vapor pressure greater than or equal to 8.3 kilopascals and annual average HAP liquid concentration greater than 4 percent by weight total organic HAP. Group 1 storage vessel requirements are noted in the AOP Section 5 specifically applicable terms. The facility-wide terms in Section 4 of the AOP include a general requirement to include dimensions and capacities for all group 2 storage vessels. Section 1 of the AOP includes the designation of hydrocarbon storage vessels at

the time of permitting. The current service and designation for facility hydrocarbon tanks are listed in the following table:

Table 6-3 Facility Tank List and Part 63 Subpart CC Applicability

Tank #	Tank Group *	Typical Material Stored	Capacity (gal)	Tank Type **	Secondary Seal? (Yes or No)
1	1	CRUDE	6,342,000	DDFR	Yes
2	1	CC FEED / CRUDE	6,342,000	DDFR	Yes
3	1	CRUDE	6,342,000	DDFR	Yes
4	1	CRUDE	6,342,000	DDFR	Yes
5	1	CRUDE	6,342,000	DDFR	Yes
6	2	CC FEED	6,342,000	SDFR	No
7	2	CC FEED	6,342,000	DDFR	No
8	2	DECANT	3,402,000	FIXED	-
9	2	DECANT	3,402,000	FIXED	-
10	2	CCLVGO	2,352,000	FXIFR	No
11	2	CR FEED	3,402,000	FIXED	-
12	2	SR HGO	3,402,000	FXIFR	No
13	1	REFORMATE	3,402,000	DDFR	Yes
14	1	REFORMATE	3,402,000	DDFR	Yes
15	1	CC GASOLINE	2,352,000	DDFR	Yes
16	1	CC GASOLINE	2,352,000	DDFR	Yes
17	1	SR GASOLINE	2,352,000	DDFR	Yes
18	1	CC GASOLINE	2,352,000	DDFR	Yes
19	1	SLOPS / LGO	1,260,000	DDFR	Yes
20	1	ALKYLATE	1,260,000	SDFR	Yes
21	1	ALKYLATE	1,260,000	DDFR	Yes
22	1	ALKYLATE	1,260,000	DDFR	Yes
23	2	JET FUEL	1,260,000	FIXED	-
24	1	NHT FEED	3,402,000	SDFR	Yes
25	2	OOS (June 2005)	1,260,000	FIXED	-
26	2	DIESEL	3,402,000	FIXED	-
27	1	GASOLINE	1,260,000	DDFR	Yes
28	1	GASOLINE	1,260,000	DDFR	Yes
29	1	GASOLINE	3,402,000	DDFR	Yes
30	1	GASOLINE	1,260,000	DDFR	Yes
31	1	GASOLINE	1,260,000	DDFR	Yes
32	1	GASOLINE	3,402,000	DDFR	Yes
33	2	MARINE FUEL OIL	1,260,000	FIXED	-
34	2	ASPHALT	3,402,000	FIXED	-

Tank #	Tank Group *	Typical Material Stored	Capacity (gal)	Tank Type **	Secondary Seal? (Yes or No)
35	2	IFO	3,402,000	FIXED	-
36	2	IFO	3,402,000	FIXED	-
39	1	SLOPS	1,260,000	FXIFR	No
40	1	SLOPS	420,000	FXIFR	No
41	2 a, c	SLOPS	38,640	FIXED	-
42	2 a, c	SLOPS	38,640	FIXED	-
43	2	REFINERY FUEL OIL	126,000	FIXED	-
44	2	CR WASH WATER / CCU SPENT CAUSTIC	840,000	FIXED	-
45	2 c	MDEA	12,600	FIXED	-
46	2 c	EMPTY	12,600	FIXED	-
47	2 c	EMPTY	12,600	FIXED	-
49	2	BOILER FEED WATER	378,000	FIXED	-
53	2	CAUSTIC	42,000	FIXED	-
54	2	CAUSTIC	42,000	FIXED	-
55	2	EMPTY	42,000	FIXED	-
56	2	SPENT CAUSTIC	21,000	FIXED	-
57	2	SPENT MDEA / WATER	39,900	FIXED	-
60	1	CRUDE	6,342,000	SDFR	Yes
62	2	EMPTY	126,000	FIXED	-
87	2 c	FUEL OIL	21,000	FIXED	-
88	1	RBC BOTTOMS	420,000	DDFR	Yes
89	2	EMPTY	420,000	DDFR	No
90	1	ALKYLATE / REF BOTTOMS	420,000	DDFR	Yes
91	2	L.S. DIESEL	1,260,000	SDFR	No
92	1	GASOLINE	6,342,000	SDFR	Yes
97	2 b, c	SPENT ACID	38,640	FIXED	-
109	2 c	SPENT CAUSTIC	21,000	FIXED	-
113	2	SR HGO / SR LGO	1,260,000	SDFR	No
114	2	L.S. DIESEL	5,292,000	FXIFR	No
115	2 c	SPENT CAUSTIC	21,000	FIXED	-
129	2 c	AQUEOUS AMMONIA	16,800	FIXED	-
134	1	GASOLINE	4,074,000	SDFR	Yes
135	2	CC FEED	7,224,000	SDFR	Yes
136	1	CRUDE	7,224,000	SDFR	Yes
138	2	CHEM ADDITIVE	11,802	FIXED	-
142	2	JET FUEL	6,342,000	FIXED	-
148	2	JET FUEL	6,342,000	SDFR	No

Tank #	Tank Group *	Typical Material Stored	Capacity (gal)	Tank Type **	Secondary Seal? (Yes or No)
160	2	EMPTY	84,000	FIXED	-
161	1	BALLAST	2,268,000	FXIFR	No
165	1	CRUDE	25,410,000	DDFR	Yes
166	1	CRUDE	25,410,000	DDFR	Yes
171	2	DIESEL	5,544,000	FIXED	-
202	NSPS - Kb	GASOLINE	8,568,000	DDFR	Yes
203	NSPS – Kb	GASOLINE	8,442,000	DDFR	Yes
216	NA	DIVERSION WATER	4,284,000	EFR	No
231	NSPS - Kb	REFORMATE	4,662,000	SDFR	Yes
232	2 c	EMPTY	12,600	FXIFR	No
247	2	ASPHALT / CUTTER MIX	840,000	FIXED	-
248	2	ASPHALT CUTTER	840,000	FIXED	-

** Tank Type Notes: DDFR = Double Deck External Floating Roof; SDFR = Single Deck External Floating Roof; FXIFR = Fixed Roof with Internal Floating Roof; FIXED = Fixed Roof*

*** Tank Group Notes: (a) tanks operated as oil/water separators and are included in the BWON annual TAB(b) annual average composition of tank contents < 4% wt HAPS(c) tank capacity < 177 m3 (1.13 Mbbl)*

Tank 62 is an emergency surge vessel installed at the time of refinery start-up (1955) to contain crude oil from any over-pressuring of the Trans Mountain Pipeline (e.g., dynamic release in the event of an emergency or unscheduled shutdown). There have been no pipeline emergencies since the startup of the refinery. Northwest Clean Air Agency (NWCAA) allowed the tank to be exempt from the requirement to have an internal roof under NWCAA Regulations Sections 580.32 due to safety considerations (potential loss of roof due to very rapid movement in the event of an emergency); the history of the pipeline; and the tank's secondary role in emergency circumstances. In the event of an emergency, the refinery is obliged to empty and clean the tank as soon as possible in accordance with the Tank 62 Response Plan submitted to the NWCAA on June 1, 1995. The tank is a Group 2 designation under Petroleum Refinery MACT I standards because it is in HAP service less than 300 hours/year.

Tanks 202, 203, and 231 are subject to 40 CFR Part 60 Subpart Kb. 40 CFR 63.640(n)(3) stipulates that Kb tanks comply only with Kb, not the Part 63 provisions. Therefore, the specifically applicable requirements for Tanks 202, 203, and 231 appear as only Kb.

Storage tank 216 service is wastewater, specifically primary clarifier effluent, at the wastewater treatment unit. The tank was built in 1993 and upgraded in 2008 with at floating roof to protect migratory birds. There are no applicable air regulations on tank 216 at the time of permitting.

The storage tank provisions from Subpart CC overlap local NWCAA regulation section 580 for tanks at the facility. Under the current version of NWCAA Section 580 (50.26 and 580.37) there are exemptions allowing the source to only follow a federal rule (NSPS or NESHAP) for controlling emissions from tanks. However, these exemptions are not found in the current State Implementation Plan (SIP) and therefore cannot be used by the source because they are not federally enforceable.

Because of this discrepancy, only the SIP adopted version of NWCAA 580 citations are found in the AOP. Because of the regulatory uncertainty associated with 580.322 and 580.323, the AOP is written on the basis that the refinery is using NSPS Subpart Kb as the control method, which constitutes compliance with Part 63 Subpart CC.

Process vents are listed with the control strategy in the following Table. The regulation designates vents as group 1 or group 2 based on the HAP content - Group 1 vents are required to implement controls to reduce organic HAP emissions. Group 1 miscellaneous process vent means a miscellaneous process vent for which the total organic HAP concentration is greater than or equal to 20 parts per million by volume, and the total volatile organic compound emissions are greater than or equal to 33 kilograms per day for existing sources and 6.8 kilograms per day for new sources at the outlet of the final recovery device (if any) and prior to any control device and prior to discharge to the atmosphere.

Table 6-4 Part 63 Process Vent Descriptions

Process Unit	Vent Number	Group	Control
Crude	1-1273-003	1	Fuel gas/flare
	1-1272-004 1-1290-006	2 2	Fuel gas/flare Fuel gas/flare
Vacuum Flasher	2-632-005 2-645-013 2-683-002	1 1 1	Fuel gas/flare F-751/752 (>44MW) Fuel gas/flare
CCU	3-655-009 3-655-011	2 2	COBs F-302/304 (>44MW) COBs F-302/304 (>44MW) or F-751/752 (>44MW)
CFH/DHT	65-667-004	2	Fuel gas/flare

No Subpart CC process vent bypass lines are noted in the facility documentation.

The primary flare that controls group 1 process vents is the multi jet flare X-819. Tesoro submitted information regarding the flare in the initial notification for Subpart CC on January 14, 1999. The flare is a steam assisted unit with average net heating value of approximately 1200 Btu/scf the nozzle velocities were calculated to be between 14 ft/sec and 41 ft/sec.

Subpart CC identifies wastewater streams containing benzene and implementing the control strategy of 40 CFR Part 61 Subpart FF. Tesoro is already subject to the Subpart FF regulation. Therefore, there are no additional requirements imposed by Subpart CC. Similarly to the other sections of the regulation, streams are designated as group 1 or 2. Group 1 designates a wastewater stream that has a flow rate of 0.02 liters per minute or greater, a benzene concentration of 10 parts per million by weight or greater, and is not exempt from control requirements under the provisions of 40 CFR part 61, subpart FF. 40 CFR §63.647 wastewater provisions require that group 1 wastewater streams comply with the requirements of §§61.340 through 61.355 of 40 CFR Part 61, Subpart FF for each process wastewater stream that meets the definition in §63.641. These citations constitute all the measurement and control requirements of Subpart FF.

The facility has identified the wastewater streams in the following table as group 1.

Table 6-5 Part 63 Group 1 Wastewater Streams

Process Unit	Group 1 Stream Identification
Crude	Desalter brine
	V-135 Salt dryer
	Crude unit samples
Jet Treater	V-646 Aquafiner
	V-137 jet salt dryer
	V-617 Jet treater coalescer
	V-214 Water boot
	V-113 Dirty naphtha settler
DHT	DHT feed coalescer
	DHT Water settler
	DHT coalescer
CR/NHT	CR stabilizer gas wash water
	CR Regen Degassing pot
	CR washwater (Tank 44)
	CR/NHT samples
CGS	2nd Stage CGS tops treater
CCU	Petreco precipitator
	3rd Stage gasoline treater
	Wash water flash drum
	Slurry Pump 1 pkg gland coolant
	SWS bottoms/PTU bottoms
	CCU samples
Alkylation	Spent Caustic (Tank 57)
WWTP	Slop oil (Tank 41)
	Slop oil (Tank 42)
	Wharf hose draining
	Refinery lab samples

Equipment in HAP service is required to be included in the facility LDAR program. Tesoro has opted to follow the 40 CFR Subpart VV implementation of LDAR under this regulation on unit-by-unit basis designating gaseous, light liquid, and heavy liquid components as HAP-service; simplifying program requirements. Units directly subject to Subpart CC LDAR requirements are:

Crude Distillation

Vacuum Flasher

Residuum Oil Supercritical Extraction (ROSE)

Cat Gas Splitter (CGS)/Jet Fuel Treater (JFT)

Clean Fuels Hydrotreater (CFH)/Distillate Hydrotreater (DHT)

Benzene Saturation (BenSat)

Catalytic Cracking Unit

Selective Hydrogenation (SHU)

Catalytic Reforming (CR)/Naphtha Hydrotreater (NHT)

Amine 2

Alkylation

Refinery Flare System

Tank farm 1

Tank farm 2

A detailed discussion of the facility LDAR program is included in Section 5.1.6.

Subpart CC provisions appear for each subject emission unit with the exception of the LDAR provisions which are combined and cross-referenced.

6.2.7 Part 63 Subpart UUU - National Emission Standards for Hazardous Air Pollutants for Petroleum Refineries: Catalytic Cracking Units, Catalytic Reforming Units, and Sulfur Recovery Units

Subpart UUU establishes NESHAP for catalytic cracking units, catalytic reforming units, and sulfur recovery units, as well as associated by-pass lines at petroleum refineries. Hazardous air pollutants reduced by this rule include organics (acetaldehyde, benzene, formaldehyde, hexane, phenol, toluene, and xylene); reduced sulfur compounds (carbonyl sulfide, carbon disulfide); inorganics (hydrogen chloride, chlorine); and particulate metals (antimony, arsenic, beryllium, cadmium, chromium, cobalt, lead, manganese, and nickel). The health effects of exposure to these HAP can include cancer, respiratory irritation, and damage to the nervous system. These final standards implement section 112(d) of the Clean Air Act (CAA) by requiring all petroleum refineries that are major sources of HAP to meet standards reflecting the application of the maximum achievable control technology (MACT). Subpart UUU became final on April 11, 2002. The first revision became final on February 9, 2005.

Subpart UUU applies to Tesoro because Tesoro is “major” for hazardous air pollutants (HAP). Subpart UUU applies to the catalytic cracking unit (CCU) and the catalytic reformer (CR) as well as bypasses for each of those units.

Tesoro does not operate a sulfur recovery unit. Sulfur is sent to the adjacent General Chemical facility via pipelines in the form of acid gas from the amine treatment unit and via pipeline or trucks as spent sulfuric acid from the alkylation unit.

Subpart UUU provides options for compliance with emissions limits, operating practices, monitoring, recordkeeping and reporting requirements by referring to tables at the end of the text of the Subpart. Tesoro has reviewed Subpart UUU and provided the NWCAA with the options it is currently employing for maintaining and demonstrating compliance. The AOP reflects these options only.

The Subpart UUU compliance date was April 11, 2005. NWCAA granted Tesoro a one-year extension to meet requirements set forth for CCU Metal HAPS §63.1564, with a termination date of April 11, 2006. This extension allowed Tesoro to design, install, and start-up a flue gas scrubber that treats particulate matter as regulated under Subpart UUU as wells as sulfur dioxide.

Subpart UUU requires the installation, operation, and maintenance of continuous parameter monitoring systems (CPMS) configured during initial performance testing for CCU control devices including scrubbers. Tesoro operates a non-venturi jet ejector-type flue gas scrubber for PM control. This type of scrubber is exempted from pressure drop monitoring and opacity requirements but is required to conduct the liquid-to-gas ratio monitoring.

Tesoro established the CCU flue gas scrubber minimum liquid-to-gas ratio in initial source testing according to §63.1564(b).

Tesoro submitted an alternative monitoring plan to EPA Region 10 on January 21, 2005 and July 30, 2007 for compliance with the CR inorganic HAP provisions [40 CFR §63.1573]. The

plan addresses monitoring pH of the scrubber solution and the liquid-to-gas ratio to assure HCl removal. Tesoro established the CR scrubber pH and minimum liquid-to-gas ratio in initial source testing according to §63.1567.

The initial compliance notifications for Subpart UUU were received at the NWCAA on September 1, 2005 for the catalytic reformer; and September 5 and 7, 2005 and September 23, 2006 for the CCU. Compliance with the initial operation, maintenance, and monitoring plan (OMMP) provisions was met by the facility by the submission of the OMMPs for the catalytic reformer and the CCU with the initial compliance notifications. The OMMPs were approved by the NWCAA on October 10, 2006.

The CCU OMMP utilizes the diversion stack in cases when the regenerator flue gas cannot be treated in the scrubber. The primary events are when COB 2 is down and during startup/ shutdown events. During periods of scrubber bypass to the diversion stack, emissions of particulate and SO_2 exceed UUU and permit limits. The OMMP addresses these events by minimizing sulfur in the feed as well as reducing CCU feed to minimum stable rates.

40 CFR 63.1570(g) states that "*consistent with §§63.6(e) and 63.7(e)(1), deviations that occur during a period of startup, shutdown, or malfunction are not violations if you demonstrate to the Administrator's satisfaction that you were operating in accordance with §63.6(e)(1). The SSMP must include elements designed to minimize the frequency of such periods (i.e., root cause analysis). The Administrator will determine whether deviations that occur during a period of startup, shutdown, or malfunction are violations, according to the provisions in §63.6."* Considering this provision, the determination of violations regarding excess emissions events caused by startups, shutdowns, and malfunctions will be on a case-by-case basis. This is consistent with the EPA guidance issued July 22, 2009 by Adam Kushner as described in the Subpart A section above.

Subpart UUU specifies what the facility must do to change the established operating limit for a continuous parameter monitoring system including additional performance testing; a performance test in conjunction with an engineering assessment, or an engineering assessment to verify that, at the new operating limit, the unit is in compliance with the applicable emission limitation. If the facility makes any change in process or operating conditions that could affect control system performance or changes designated conditions after the last performance or compliance tests were done, Tesoro must establish a revised operating limit for the continuous parameter monitoring system [40 CFR §63.1571(e)].

Subpart UUU limits CO emissions to 500 ppm on a dry basis. The regulation allows for two possible compliance monitoring options valid for Tesoro that exempt the facility from having to install CEMS. Tesoro has conducted the 30-day less than 50 ppm CO emissions demonstration allowed under NSPS [§63.1565(b)(i)] per a permit requirement. The CO boilers at the facility are greater than 44MW [§63.1565(b)(ii)]; 86MW each. Therefore, the only remaining term in the AOP is the work practice standards.

6.2.8 Subpart DDDDD – Industrial, Commercial and Institutional Boilers and Process Heaters

40 CFR Part 63 Subpart DDDDD, often referred to as the "Boiler MACT," was intended to regulate industrial, commercial, or institutional boilers or process heaters that are located at a major source of hazardous air pollutants. Tesoro operates oil and gas fired boilers and heaters that were subject to the Boiler MACT. However, as a result of the DC Circuit Court ruling on June 8, 2007, EPA vacated the Boiler MACT. EPA has stated that the 112(j) provisions, called the "MACT Hammer," are triggered with the vacatur of the Boiler MACT, but no official guidance has been issued clarifying the path forward. The burden falls on the facility to propose requirements that constitute MACT at its affected sources. Tesoro submitted part 1 and part 2 applications under 112(j) to the NWCAA.

6.2.9 Subpart GGGGG - National Emission Standards For Hazardous Air Pollutants: Site Remediation

This regulation controls the emissions of hazardous air pollutants (HAP) at facilities where remediation activities are used to clean up spills and contaminated soil. The Anacortes refinery is only subject to the recordkeeping requirements of the regulation when meeting either of the following conditions:

If the remediation is completed in no more than 30 consecutive calendar days (must maintain records for each short term project), or

If the total quantity of all HAP contained in all extracted remediation material for all remediation activities for each year is less than one megagram (Mg), or 2200 lbs (the facility must maintain records to demonstrate compliance).

7. FACILITY-WIDE PROGRAM DESCRIPTIONS

Tesoro implements facility-wide programs that cross over between multiple operating units and regulations. This section provides general information about those programs.

7.1 Leak Detection and Repair (LDAR)

The facility LDAR program was initiated with the applicability of NSPS units and has evolved to include local and federal requirements as well as permit conditions.

The facility LDAR program was significantly expanded in 1997 in response to the NWCAA Regulation 580 that imposed monitoring requirements in advance of the compliance dates for 40 CFR Part 63 Subpart CC and included applicability to light VOC units including LPG and butane.

The facility originally opted to meet the annual performance test demonstration approach to the regulations, requiring annual monitoring on a unit-by-unit basis. Each unit subject to the provisions of 60 Subpart VV was required to be monitoring within one week's time. This compliance option proved to be onerous for scheduling and coordination. In 2004 and 2005, the facility worked with NWCAA to transition to the skip-period monitoring basing the initial skip periods on the previous annual source test results. The facility had consistently performed at less than 2.0% leak rates and was granted the transition to annual skip monitoring directly.

Enhanced LDAR requirements were applied to the facility as BACT through New Source Review permitting starting in the 1990s. The permits required compliance with the new equipment provisions of 63 Subpart H. The goal of the reference was to impose lower leak definitions for valves and pumps. However, the overlap of regulatory frameworks proved confusing in that the two programs have different detail requirements on recordkeeping and reporting. Tesoro requested in 2008 to align the language of the New Source Review permits to a 40 CFR Part 60 Subpart VV-based LDAR program with the lower leak definitions. These permit changes were completed in early 2009 and are incorporated into this AOP renewal.

The enhanced LDAR permits issued by NWCAA (OACs 744a, 827b, 896a, 901a, 952b, and 989a) include language copied from Method 21 that requires the source to use calibration gases within 10% of the enhanced standard. This language was not translated directly into the MR&R section of the AOP, but the requirement to follow Method 21 was included. There are two bases for this omission; one is how the program is operating at the facility and the other is that the facility has demonstrated that the requirement is unnecessary.

The Tesoro LDAR program is currently implemented by operations employees. These employees operate the instruments in the field (ThermoFisher TVA 1000b); including conducting a daily calibration verification (the LDAR operators conduct a calibration precision test in accordance with 8.1.2 of Method 21) using zero, 2,000 ppm, and 10,000 ppm methane-in-air standards. In the event that the instrument fails the precision test, it is taken out of service and sent to the facility instrument and electronics (I&E) technicians. Also, the instruments are calibrated quarterly by facility I&E technicians in accordance with union requirements onsite. Operations personnel are prohibited from calibrating or adjusting the instruments in any way. These actions deviate from 40 CFR Part 60 Subpart VV, which requires daily calibration of instruments used for monitoring *(§60.485 Test methods and procedures. (b) The owner or operator shall determine compliance with the standards in §§60.482–1 through 60.482–10, 60.483, and 60.484 as follows: (1) Method 21 shall be used to determine the presence of leaking sources. <u>The instrument shall be calibrated before use each day of its use</u> by the procedures specified in Method 21. The following calibration gases shall be used:(i) Zero air (less than 10 ppm of hydrocarbon in*

air); and (ii) A mixture of methane or n-hexane and air at a concentration of about, but less than, 10,000 ppm methane or n-hexane.) The procedures implemented by Tesoro are actually equivalently or more stringent than the requirements in the regulation and demonstrate the stability of the instruments in use. Further, Tesoro conducted LDAR monitoring in October 2009 that included operators conducting calibration verifications using 500 ppm methane-in-air standards. The instruments performed within the requirements of the Method 21 for those standards as well as the typically used 2,000 ppm and 10,000 methane-in-air standards. Because the program is based on the Subpart VV, the use of zero, 2,000 ppm, and 10,000 ppm methane-in-air standards is appropriate.

At the time of this permit, all units at the refinery implement leak detection and repair (LDAR) monitoring and reporting based on the Subpart VV standards for consistency, with upgrades to leak definitions to increase stringency under BACT. The units are listed here as they are managed according to the LDAR program.

Crude Distillation

Vacuum Flasher

Residuum Oil Supercritical Extraction (ROSE)

Clean Fuels Hydrotreater (CFH)/Distillate Hydrotreater (DHT)

Butane Isomerization

Catalytic Cracking Unit

Selective Hydrogenation (SHU)

Catalytic Reforming (CR)/Naphtha Hydrotreater (NHT)

Amine 2

Refinery Flare System

Alkylation (Compressors J-901 and J-902 are exempt; not in HAP service)

Cat Gas Splitter (CGS)/Jet Fuel Treater (JFT)

Tank farm 1

Tank farm 2

LPG loading

Tesoro monitors valves in accordance with option 60.483-2 – skip period monitoring. This option dictates monitoring frequency on the basis of the percent of valves found leaking.

Table 7-1 Leak Detection and Repair Program Summary

Process Unit	Gas/LL Valves*	LL Pumps*	Compressors*	Applicable 40 CFR Regulations – Compliance
Crude	2,853	25		63 CC – 60 VV
Vacuum Flasher	934	4	2	63 CC – 60 VV
ROSE	1,602	4	1	63 CC – 60 VV
BI	1,761	4		60 GGG – 60 VV
BenSat				63 CC; 60 GGGa – 60 VVa
CCU	4,755	24		63 CC – 60 VV
CFH/DHT	2,152	7		63 CC – 60 VV
CR/NHT	3,911	27		63 CC – 60 VV
CGS/JFT	778	6		63 CC – 60 VV
SHU	707	4		63 CC – 60 VV

Amine 2	287	0		60 GGG – 60 VV
Alkylation	3,195	26	2	63 CC – 60 VV
Flare	251	3		63 CC – 60 VV
Tank farm 1	947	17		63 CC – 60 VV
Tank farm 2	548	7		63 CC – 60 VV
LPG loading				NWCAA 580 – 60 VV
Totals	17,531	121	5	

* Equipment counts where available, are approximate at the time of permit issuance

The monitoring cites in the AOP in each unit Table of Section 5 reference the regulation imposing the requirement and points to Table 6.1 (40 CFR Part 60 Subpart VV) for the details of the program. In the units where leak definitions are more stringent than Subpart VV, the appropriate leak definitions are listed.

The LDAR program at the facility historically and at the time of permitting is implemented by Tesoro staff. The program went through a major update in 2008, transitioning to using Thermo TVA 1000B instruments with electronic logging and database tracking in 2009.

At the time of permitting, the facility has proposed the installation of the BenSat unit that triggers an LDAR program based on 40 CFR Part 60 Subpart GGGa referencing Subpart VVa. Sections 5 and 6 include these regulatory references as they are expected to apply to the BenSat unit.

7.2 Wastewater Collection and Treatment

The Wastewater collection and treatment system and its various components at the refinery are regulated under three sets of requirements: 40 CFR Part 60 Subpart QQQ, Part 61 Subpart FF, and Part 63 Subpart CC. Each of these regulations applies to the facility according to different criteria and at different affected facility levels. The regulation applicability is discussed in detail in the Federal Rules section of this Statement of Basis with a summary of the Tesoro affected facilities/equipment. This description is intended as a clarification of the rules interactions and the general approach to the AOP terms and conditions for Tesoro.

Part 60 Subpart QQQ applies to individual drain systems receiving process wastewater that are constructed or modified after May 4, 1987. Subpart QQQ imposes design, inspection, and maintenance requirements for the individual drain systems and downstream equipment. The general terms of Subpart QQQ compliance for individual drain systems, junction boxes, and sewer systems are included in a new table in Section 5: Oily Wastewater Collection, Storage, and Treatment. Part 63 Subpart CC specifically exempts group 1 designated streams from QQQ applicability [§63.640(o)(1)]. Therefore, the AOP Section 5 units noting Subpart QQQ provisions appear only on non-Subpart CC / Subpart QQQ applicable units. The table below lists the process units at the facility and the applicability of wastewater regulations.

Subpart FF applies to the Tesoro facility. Part 61 Subpart FF is a facility-wide applicable requirement based on the potential to emit of benzene from all the facility wastewater streams. The applicability and compliance citations have been included in Section 5 as a new table: Oily Wastewater Collection and Treatment – details the compliance requirements including determination of the total annual benzene (TAB) quantity and other point-of-generation considerations, individual drain systems, junction boxes, and sewer systems as well as treatment and storage in the effluent plant.

Subpart CC identifies group 1 wastewater streams based on flow, benzene content and that are not otherwise exempt. The regulation notes that the affected source is the entire unit

generating the benzene waste. The US EPA Petroleum Refinery MACT Standard Guidance document notes that for group 1 wastewater streams, Part 61 Subpart FF contains the only required compliance provisions. All Subpart CC-group 1 wastewater streams are *subject* to Subpart FF at the Tesoro facility. Subpart CC co-applies with Subpart FF [63.647(c)]; coordinately, failure to meet any applicable Subpart FF term is also a violation of Subpart CC. This is noted in Section 5 by including the Subpart CC reference with the Subpart FF facility-wide line item.

7.3 Storage Tanks

Tesoro operates storage tanks throughout the facility. Most of the hydrocarbon tanks are managed as part of the two tank farms. The predominant requirements for tank emissions fall under 40 CFR Part 63 Subpart CC and Part 60 Subpart Kb. Also appearing in the AOP are NWCAA Regulations 560 and 580. These regulations are part of the currently approved State Implementation Plan, which does not include the exclusion reference in NWCAA 580.26.

The AOP separates the tanks into similarly-regulated groups. For example, all the tanks that are identified as 40 CFR Part 63 Subpart CC group 2 at the time of permitting are identified together. Tanks identified as 40 CFR Part 63 Subpart CC group 1 are split into external floating roof and internal floating roof tank groups.

8. GENERAL PERMIT ASSUMPTIONS

8.1 Federal Enforceability

Federally enforceable requirements are terms and conditions required under the Federal Clean Air Act (FCAA) or under any of its applicable requirements. Local and state regulations may become federally enforceable by formal approval and incorporation into the State Implementation Plan (SIP) or through other delegation mechanisms. Federally enforceable requirements are enforceable by the EPA and citizens. All applicable requirements in the permit including standard terms and conditions, generally applicable requirements, and specifically applicable requirements are federally enforceable unless identified in the permit as enforceable only by the state.

Most rules and requirements are followed by a date in parentheses. Two different versions (identified by the date) of the same regulatory citation may apply to the source if federal approval/delegation lags behind changes made to the Washington Administrative Code (WAC) or the NWCAA Regulation. For NWCAA regulations, the date represents the most recent Board of Directors adoption date, which is identified as the "Passed" or "Amended" date in the NWCAA Regulation. The date associated with an OAC or PSD permit represents the latest revision date of that order. For a federal rule, the date is the rule's most recent promulgation date.

Chapter 173-401 WAC is not federally enforceable although the requirements of this regulation are based on federal requirements for the air operating permit program. Upon issuance of the permit, the terms based on Chapter 173-401 WAC will become federally enforceable for the source.

8.2 Future Requirements

Promulgated applicable requirements with future effective compliance dates may be included as applicable requirements in the permit. As of the date of permit issuance, there are no promulgated regulations with future effective compliance dates to which the permittee is subject.

Some requirements that are not applicable until triggered by an action, such as the requirement to file an application prior to constructing a new source, are addressed within the standard terms and conditions section of the permit.

8.3 Compliance Options

The Tesoro Refining and Marketing Company did not require emissions trading provisions or specify more than one operating scenario in the operating permit application, so the permit does not address these options. This operating permit does not condense overlapping applicable requirements (streamlining) nor does it provide any alternative emissions limitations.

8.4 GAP Filling

Title V of the Federal Clean Air Act is the basis for the EPA's 40 CFR 70, which is the basis for the State of Washington air operating permit regulation, Chapter 173-401 WAC. Title V requires that all air pollution regulations applicable to the source be called out in the air operating permit for that source. Title V also requires that each applicable regulation be accompanied by a federally enforceable means of "reasonably assuring continuous compliance." Some of the older general regulations and federal new source performance standards do not have monitoring, recordkeeping and reporting requirements that are sufficient to reasonably assure continuous compliance with the emission limitation. Title V,

40 CFR 70, and WAC 173-401-615 all contain a "gap-filling" provision for that situation[3]. The permitting agency is required to create monitoring, recordkeeping and reporting requirements that fill the gap and to put those requirements in the air operating permit. In any term where gap-filling has taken place, the term "directly enforceable" will be included as described in the introductory paragraph to each section.

8.5 Compliance Assurance Monitoring (CAM) Plans

Tesoro is subject to CAM provisions 40 CFR Part 64 (October 22, 1997). The CAM rule requires owners or operators of subject sources to conduct monitoring that satisfies particular criteria established in the rule to provide a reasonable assurance of compliance with applicable requirements. Monitoring focuses on emissions units that rely on pollution control device equipment to achieve compliance. The CAM rule coordinates existing monitoring requirements with additional monitoring if current requirements fail to specify appropriate detail. The facility is subject to the CAM rule since it is (1) subject to an emission limit, (2) uses add-on control technology, and (3) has potential pre-control device emissions classifying it as a major source. Tesoro has submitted five CAM Plans in the AOP permit renewal application:

Cat cracker fresh catalyst hopper (V-307) – baghouse for control of particulate matter;

Cat cracker spent catalyst hopper (V-308) – baghouse for control of particulate matter;

Cat cracker equilibrium hopper (V-353) – baghouse for control of particulate matter;

Cat cracker additive hopper (V-356) – baghouse for control of particulate matter; and

Cat cracker flue gas scrubber for control of sulfur dioxide.

The CAM Plans provide information on the monitoring requirements, appropriateness of the control approach, details of the quality assurance/quality control measures and rationale for selection of indicator range. Each plan also includes a requirement for implementation of a "quality improvement plan (QIP)" if the current plan does not sufficiently prevent occurrence of "excursions" that are specified in the CAM plan.

The CAM plans submitted by Tesoro have been incorporated directly into section 5 of the permit as a citation, description, and MR&R requirements that are enforceable permit terms.

---

[3] WAC 173-401-615(1) Monitoring. Each permit shall contain the following requirements with respect to monitoring:
(a) All emissions monitoring and analysis procedures or test methods required under the applicable requirements, including any procedures and methods promulgated pursuant to sections 504(b) or 114 (a)(3) of the FCAA;
(b) Where the applicable requirement does not require periodic testing or instrumental or noninstrumental monitoring (which may consist of recordkeeping designed to serve as monitoring), periodic monitoring sufficient to yield reliable data from the relevant time period that are representative of the source's compliance with the permit, as reported pursuant to subsection (3) of this section. Such monitoring requirements shall assure use of terms, test methods, units, averaging periods, and other statistical conventions consistent with the applicable requirement. Recordkeeping provisions may be sufficient to meet the requirements of this paragraph; and
(c) As necessary, requirements concerning the use, maintenance, and, where appropriate, installation of monitoring equipment or methods.

9. PERMIT ELEMENTS AND BASIS FOR TERMS AND CONDITIONS

The permit is divided into the following sections:

Information Page

Attest

Emissions Unit Descriptions

Standard Terms and Conditions

Standard Terms and Conditions for New Source Performance Standards and National Emission Standards for Hazardous Air Pollutant Requirements

Generally Applicable Requirements

Specifically Applicable Requirements

Common Requirements

Alternative Monitoring Plans

Inapplicable Requirements

9.1 Information Page, Attest, and Emissions Unit Descriptions

The Information Page identifies the facility, the responsible corporate official, and the agency personnel responsible for permit preparation, review, and issuance. The Attest section provides NWCAA's authorization for the source to operate under the terms and conditions contained in the permit.

9.2 Emission Unit Descriptions

Significant emission units are listed in the Emissions Unit Descriptions section of the permit, along with the identification number assigned by the permittee, control equipment type (if any), fuel type, and general comments. This section is not meant to provide a detailed description of the entire facility. Detailed information about the facility may be found in the operating permit application and in supplementary files located in the docket.

9.3 Standard Terms and Conditions

The Standard Terms and Conditions section of the permit specifies administrative requirements or prohibitions with no ongoing compliance monitoring requirements. The legal authority for the Standard Terms and Conditions are provided in the citations in Section 2 of the permit. The description of the regulation in each of these conditions (with the exception of those labeled "Directly enforceable under WAC 173-401-615(1)(b) & (c), 10/17/02") is sometimes a paraphrase of the actual regulatory requirement. Where there is a difference between the actual requirement and the paraphrased description, the cited regulatory requirement takes precedence. In an effort to make the section more readable, the terms and conditions have been grouped by function. In some cases, similar requirements at the state and local authority level have been grouped together.

Three permit conditions in Section 2 are labeled "Directly enforceable under WAC 173-401-615(1)(b) & (c), 10/17/02". These conditions are a clarification of the regulatory requirements, as the NWCAA interprets those requirements. They are legal requirements with which the permittee must comply and are directly enforceable through the permit.

A number of requirements that would not be applicable until triggered have also been included in this section. An example of one such requirement is the requirement for a source to submit an application for new source review.

9.4 Standard Terms and Conditions for New Source Performance Standards and National Emission Standards for Hazardous Air Pollutant Requirements

The Standard Terms and Conditions for New Source Performance Standards and National Emission Standards for Hazardous Air Pollutant Requirements section of the permit also specifies administrative requirements or prohibitions with no ongoing compliance monitoring requirements. The conditions in this section, Section 3, are taken from the "General Provisions" of 40 CFR Parts 60, 61, and 63. They apply specifically to the affected sources, affected facilities, or stationary sources subject to the standards of 40 CFR Parts 60, 61, and 63. These affected sources, affected facilities, or stationary sources, identified in Section 5 of the permit, are linked to the requirements in Section 3 by a note either in the first row of the table of requirements for the unit, or within the description of the regulatory requirement itself.

9.5 Generally Applicable Requirements

The Generally Applicable Requirements section of the permit identifies requirements that limit current emissions or operations and apply broadly to the facility. With some exceptions, each of these requirements applies non-specifically to sources. For example, NWCAA Regulation Section 455.1 broadly prohibits particulate emissions that exceed 0.1 gr/dscf from any emissions unit, with certain exceptions. Other requirements apply to only certain types of emissions units. For example, WAC 173-400-060 applies only to general process units. Despite these differences in applicability, these requirements have been listed together in the Generally Applicable Requirement section of the permit. The generally applicable requirements are organized in tabular form in Section 4 of the permit.

The "Permit Term" column of Table 4 provides permit term numbers used to identify listed elements. The requirements specified in the "Citation" column are applicable plantwide to all emission units at the source, including insignificant emission units. The "Description" column is a brief description of the applicable requirements for informational purposes only, and is not enforceable. Periodic or continuous monitoring requirements (including testing) are specified in the "Monitoring/Recordkeeping/Reporting" column, which identifies monitoring, recordkeeping and reporting (MR&R) obligations the source must perform as required by WAC 173-401-605(1), or the underlying requirement.

Two federal regulations are applicable facility-wide and are listed in section 4: 40 CFR Part 61 Subpart FF and Part 63 Subpart GGGGG.

The remainder of the terms in this section stem from the state and local regulations. Many of these applicable requirements do not prescribe periodic testing or instrumental or noninstrumental monitoring sufficient to yield reliable data from the relevant time period that is representative of the source's compliance with the permit. Gapfilling, as discussed in the previous section of this statement of basis, is included for those terms and is noted as "directly enforceable."

The periodic testing for generally-applicable Operation and Maintenance (O&M) requirements in Section 4 consists of operating and maintaining equipment in accordance with all of the other terms of the permit. If there are O&M requirements that are specific to an emission unit, they are addressed in Section 5 of the permit. Otherwise, the permit

conditions, applicable requirements, and monitoring, recordkeeping, and reporting found elsewhere in Sections 2, 3, and 4 provide adequate coverage for O&M.

The MR&R condition to monitor the ambient air for emissions of sulfur oxides was retained from the original AOP. The permittee owns, operates, and maintains an ambient monitoring station on the north side of their facility currently named the Shell North Monitoring Station.

Compliance with generally applicable opacity is assured via monitoring by visual observation. For combustion units burning oil, stacks must be observed on a daily basis to qualitatively assess whether emissions are visible. After thirty consecutive days, if there are no visible emissions the frequency may be reduced to weekly observations. If opacity is observed during any one of these time periods, the permittee must reduce the visible emission to zero as soon as possible. If emissions cannot be reduced to zero, the permittee may monitor by Ecology Method 9A no later than 24 hours after initially detecting the opacity to determine whether opacity is less than 20%. Otherwise, the visual emissions shall be considered to be in excess of the standard. Additionally, the frequency of observations reverts to daily if any opacity is seen. The requirements for combusting gaseous fuels are similar, although the frequency of observation begins with monthly observations, then quarterly if no visible emissions are seen after six consecutive months. Any emission units that contain specifically applicable requirements for are excluded from the MR&R requirements of this condition.

Compliance with particulate emission standards is also assured via monitoring by visual observation. Although particulate emission rate is only loosely related to opacity, a zero percent opacity action level will likely ensure that emissions are less than the 0.1grain/dscf emission standard. This approach is taken because proper operation of equipment at the facility, outside of short periods of fuel switching, presently results in zero opacity. The inspection frequency is the same as that for opacity, but the facility may either monitor by Ecology Method 9A until opacity is shown to be less than 20%, or the permittee must conduct a Method 5 assessment within 30 days. Again, any emission units that contain specifically applicable requirements for particulate emissions are excluded from the MR&R requirements of this condition.

To assess compliance with the facility's weight/heat rate standard for sulfur compounds, the permittee is required to combine monthly calculated and monitored sulfur dioxide emissions from various sulfur-producing emission units at the facility and divide by the overall hourly heat input. The result is reported to the NWCAA.

With regard to the 1000 ppm standard for sulfur compounds, the permittee is required to monitor the hydrogen sulfide in refinery fuel gas, sample refinery fuel oil, and calculate sulfur concentration in the flare fuel stream during process upsets.

The permittee is also required to retain fuel specifications for refinery-produced fuel and purchase records for fuels purchased outside the refinery to monitor whether the fuels contain sulfur in excess of the amount allowed in NWCAA Regulation 520.

Generally applicable requirements related to nuisance emissions, odors, and fugitive dust are monitored by maintaining a written air contaminant complaint response plan at the facility. The plan requires facility personnel to respond to complaints received from the NWCAA or the public by checking for possible sources of the nuisance emissions and operational problems. If any problems are identified and they cannot be repaired or corrected within four hours, the permittee must take action to minimize emissions until repairs can be made. Notification must be provided to the NWCAA and records must be maintained. Consistent with the original AOP, the general language to "take action to minimize emissions" was retained because the emission units at a refinery are complicated and interconnected. It is inappropriate to categorically require shutting down or bypassing

a piece of equipment in response to a nuisance complaint at a refinery. Refinery equipment shutdowns frequently cause significant emissions and unsafe conditions.

NWCAA regulations include recordkeeping and reporting that allows NWCAA to examine events that cause nuisance conditions and address them on a case-by-case basis.

9.6 Specifically Applicable Requirements

This section lists applicable requirements that apply uniquely to an emission unit or to specific groups of emission units. The section follows a similar column format to the Generally Applicable Requirements section; permit term reference number, citation, description, and MR&R.

Similarly to the generally applicable requirements, gap filling was necessary in some cases to fulfill the requirements of WAC 173-401-615(1). In these cases, an equipment-specific monitoring, recordkeeping, and/or reporting requirement was developed based on the characteristics of the permitted facility and emissions unit, the nature of the underlying requirement, the requirements of WAC 173-401-615, and EPA guidance. The MR&R requirements that contain gap-filling language are identified with the words “directly enforceable.”

The specifically applicable section is organized into multiple tables in accordance with the major process unit groupings at the facility. Each unit table provides the applicable requirements to equipment in that unit by calling out the affected equipment. Common wastewater and leak detection and repair provisions are noted for subject equipment with the term citing the applicability of the regulation and references to the appropriate table of requirements in section 6 of the AOP.

9.7 Common Requirements

Wastewater and Leak detection and repair (LDAR) requirements apply directly and indirectly to distinct areas of the facility. The underlying applicability of these common terms is included in section 5 of the permit with a reference to section 6.

For example, existing equipment is regulated under several fugitive emission MR&R requirements that together, comprise an LDAR program for most of the units. These are 40 CFR 60.590 (NSPS Subpart GGG), 40 CFR 60.480 (NSPS Subpart VV), and 40 CFR 63.640 (NESHAP Subpart CC). These regulations cross reference and address overlap to avoid duplication of LDAR strategies and reporting.

9.8 Alternative Monitoring Plan for monitoring SO_X from propane combustion unit F-753

New Source Performance Standards, Subpart J (40 CFR 60-100) for Petroleum Refineries requires that the sulfur oxide concentration of flue gas not exceed 20 ppmv on a 3-hour average, and that the H_2S content of refinery fuel gas shall not exceed 0.10 gr/dscf on a 3-hour average. The H_2S content standard is equivalent to 116 ppmw sulfur in propane. Tesoro has developed and proposed an alternative monitoring plan (AMP), that describes procedures to be followed whenever propane is utilized as a fuel in Boiler F-753 (including in combination with commercial natural gas). This plan has been developed as an alternative to the installation of a continuous analyzer to measure the sulfur content of the fuel stream or sulfur oxide content of boiler flue gas for compliance with New Source Performance Standards - Subpart J. This plan was proposed and has been approved during the original permit period.

9.9 Inapplicable Requirements

Chapter 173-401-640 WAC requires the permitting authority to issue a determination regarding the applicability of requirements with which the source must comply. If a source requests it, the permitting authority may include inapplicable requirements in the permit. Inapplicable requirements for the refinery are listed in Section 8 of the permit.

9.10 Insignificant Emission Units and Activities

Insignificant emission units and activities listed in WAC Chapter 173-401-530, -532, and –533 are present at the refinery. Because these emissions units normally have low emissions or generate only fugitive emissions, they are considered insignificant by regulation. The Generally Applicable requirements in Section 4 of the permit apply to these units, although the monitoring, recordkeeping, and reporting requirements have been determined to not apply. These emissions units and activities are listed in Table 9-1:

Table 9-1 Insignificant Activities

Unit	WAC Citation	Comment
C-701	WAC 173-401-530(4)	Intermittent Hot Drop Out Service
P-857X	WAC 173-401-533(2f)	Auxiliary Fire Pump
P-859X	WAC 173-401-533(2f)	Auxiliary Fire Pump
TK-49	WAC 173-401-532(95)	Boiler feed water
TK-50	WAC 173-401-532(4)	Hydraulic Oil
TK-58, TK-70	WAC 173-401-532(4) WAC 173-401-533(2s)	Fresh NaOH and/or H_2SO_4 <99 wt%
TK-63	WAC 173-401-532(4)	Fresh NaOH
TK-64	WAC 173-401-532(4)	Fresh NaOH
TK-65	WAC 173-401-532(96)	Steam condensate
TK-66	WAC 173-401-532(4)	Fresh NaOH
TK-68	WAC 173-401-530(4)	Process chemical
TK-72	WAC 173-401-532(120	Sump
TK-73	WAC 173-41-532(120)	Sump
TK-76	WAC 173-401-530(4)	
TK-84	WAC 173-401-532(3)	Lube oil
TK-85	WAC 173-401-532(3)	Lube oil
TK-86	WAC 173-401-533(2a)	Antifreeze
TK-101	WAC 173-401-530(4)	Fresh NaOH
TK-102	WAC 173-401-532(94)	Process water
TK-112	WAC 173-401-530(4)	Process water
TK-116	WAC 173-401-532(96)	Steam Condensate
TK-117	WAC 173-401-532(4)	Fresh NaOH
TK-123	WAC 173-401-530(4)	Process chemical
TK-126	WAC 173-401-532(96)	Steam condensate
TK-127	WAC 173-401-532(96)	Steam condensate
TK-128	WAC 173-401-532(3)	Lube oil
TK-144	WAC 173-401-530(4)	Process chemical
TK-146	WAC 173-401-532(3)	Lube oil
TK-168	WAC 173-401-530(4)	
TK-172	WAC 173-401-530(4)	Process chemical
TK-173	WAC 173-401-530(1d)	Not open to the atmosphere
TK-175	WAC 173-401-530(4)	Process chemical
TK-176	WAC 173-401-530(4)	Process chemical

Unit	WAC Citation	Comment
TK-177	WAC 173-401-530(4)	Process chemical
TK-179	WAC 173-401-532(3)	Lube oil
TK-186	WAC 173-401-530(1d)	Not open to the atmosphere
TK-189	WAC 173-401-533(2s)	H_2SO_4 < 99 wt%
TK-190	WAC 173-401-530(4)	
TK-191	WAC 173-401-530(4)	Process chemical
TK-192	WAC 173-401-532(3)	Lube oil
TK-193	WAC 173-401-530(4)	
TK-194	WAC 173-401=530(4)	
TK-195	WAC 173-401-532(96)	Steam condensate
TK-196	WAC 173-401-530(4)	Process chemical
TK-197	WAC 173-401-530(4)	Process chemical
TK-198	WAC 173-401-530(4)	Process chemical
TK-199	WAC 173-401-530(4)	Process chemical
TK-206	WAC 173-401-530(4)	Process chemical
TK-210	WAC 173-401-532(4)	Hydraulic oil
TK-211	WAC 173-401-532(4)	Hydraulic oil
TK-212	WAC 173-401-530(4)	Process chemical
TK-214	WAC 173-401-532(3)	Lube Oil
TK-215	WAC 173-401-532(3)	Lube Oil
TK-218	WAC 173-401-532(95)	Boiler feed water
TK-233	WAC 173-401-532(3)	Lube Oil
TK-234	WAC 173-401-530(4)	Process Chemical
TK-235	WAC 173-401-530(4)	Process Chemical
TK-238	WAC 173-401-532(96)	Steam condensate
TK-405	WAC 173-401-532(3)	Lube oil
TK-406	WAC 173-401-532(3)	Lube oil
TK-6650	WAC 173-401-532(4)	Fresh Sodium Hydroxide
TK-6651	WAC 173-401-532(94)	Clean Process Water
J-753X	WAC 173-401-533(2e)	Plant air compressor (NG and propane fueled) – NO_X basis
J-755X	WAC 173-401-533(2e)	Plant air compressor (NG and propane fueled) – NO_X basis
Lime Hoppers	WAC 173-401-532(105)	
Pond Dredging	WAC 173-401-532(116)	
Oily Sludge Processing	WAC 173-401-532(114)	
Nutrient Storage and Handling	WAC 173-401-530(4)	
Anti-Foam Application	WAC 173-401-530(4)	
Weed Control	WAC 173-401-532(34)	
Tilling	WAC 173-401-532(34)	
Soil Amendments	WAC 173-401-532(34)	
Use and Storage of Portable Drums and Totes	WAC 173-401-532(42)	Process chemical
Temporary Storage of Lean MDEA	WAC 173-401-530(4)	Process chemical
Storage and Use of Soap	WAC 173-401-532(4)	
Alkylation Neutralization Pit	WAC 173-401-532(120)	
Acetylene Cylinders	WAC 173-401-530(1d)	
Warehouse Cylinder Storage	WAC 173-401-530(1d)	
Lab Specialty Gases	WAC 173-401-530(1d)	

Unit	WAC Citation	Comment
Welding	WAC 173-401-533(i)	Less than 1 ton/day of welding rod
Metal Working	WAC 173-401-533(w)	Rolling, forging, drawing, stamping, shearing, or spinning hot or cold metals
Abrasive Blasting	WAC 173-401-530(4)	
Cyclone Outside Carpenters Shop	WAC 173-401-530(4)	
Auto Shop	WAC 173-401-530(45)	General vehicle maintenance
Fire Station	WAC 173-401-530(45)	General vehicle maintenance
Ammonia Cylinders	WAC 173-401-530(1d)	
Hydrogen Chloride Cylinders	WAC 173-401-530(1d)	
Chlorine Cylinders	WAC 173-401-530(1d)	
N2/H2 Trailers	WAC 173-401-530(4)	
Merox Reactor Charcoal Changeouts	WAC 173-401-530(40	
Laboratory octane-testing engines	WAC 173-401-533(f)	
Portable Engine Driven Equipment	WAC 173-401-530(4)	
Parking Lots	WAC 173-401-532(54)	
Road Paving and Dike Maintenance	WAC 173-401-532(33)	
Camping Areas on Beach	WAC 173-401-532(11)	
Agricultural Activities	WAC 173-401-532(34)	
TERA Campground, Building, Recreation Area	WAC 173-401-532(11)	
Excavation and Road Maintenance	WAC 173-401-530(1)(d)	Fugitive emissions only
Lawns and Landscaping	WAC 173-401-532(43)	
Paved Roads	WAC 173-401-530(1d)	Fugitive emissions
Unpaved Roads	WAC 173-401-530(1d)	Fugitive emissions
Recreational Fires	WAC 173-401-532(1)	Barbecues and campfires
Painting	WAC 173-401-532(33)	
Refinery Lab, Health Services HVAC	WAC 173-401-532(46)	Comfort air conditioning
Boiler Plant Control House and Lab HVAC	WAC 173-401-532(46)	Comfort air conditioning
Wharf, Loading Rack, and Blender Control Houses and Labs HVAC	WAC 173-401-532(46)	Comfort air conditioning
Alkylation/Butane Isomerization Control House HVAC	WAC 173-401-532(46)	Comfort air conditioning
CCU Control House and Lab HVAC	WAC 173-401-532(46)	Comfort air conditioning
CR/NHT Control House and Lab HVAC	WAC 173-401-532(46)	Comfort air conditioning
Crude Unit Control House and Lab HVAC	WAC 173-401-532(46)	Comfort air conditioning
Other trailer and operator shelter HVACs	WAC 173-401-532(46)	Comfort air conditioning
Refinery Lab	WAC 173-401-533(3c)	Per NWCAA agreement
Health Services	WAC 173-401-532(53)	
Effluent Lab	WAC 173-401-533(3c)	Per NWCAA agreement

Unit	WAC Citation	Comment
Boiler Plant Lab	WAC 173-401-533(3c)	Per NWCAA agreement
Blending Lab	WAC 173-401-533(3c)	Per NWCAA agreement
Alkylation/Butane Isomerization Lab	WAC 173-401-533(3c)	Per NWCAA agreement
CCU Control House Lab	WAC 173-401-533(3c)	Per NWCAA agreement
CR/NHT Lab	WAC 173-401-533(3c)	Per NWCAA agreement
Crude Control House Lab	WAC 173-401-533(3c)	Per NWCAA agreement
O_2, N_2, CO_2, Inert Gases	WAC 173-401-532(5)	
Analyzer Vents	WAC 173-401-532(8)	
Use and Storage of Compressed Non-Inert Gases in Portable Cylinders	WAC 173-401-530(1d)	Fugitive Emissions, only

9.11 Alternative Operating Scenarios

The permittee did not request any formal alternative operating scenarios under WAC 173-401-650. There are several emission units that are permitted to operate in different modes; for those units, both scenarios are written into the permit with a recordkeeping requirement to document under which scenario the emission unit is operating. For example, the catalytic cracking unit normally operates under partial burn mode. However, the CCU may be operated under total burn mode, which is defined in the permit. On a monthly basis, the number of hours when the unit was operated under total burn mode is reported to the NWCAA.

10. PUBLIC DOCKET

Copies of Tesoro's air operating permit and permit application and any technical support documents are available online at www.nwcleanair.org or at the following location:

Northwest Clean Air Agency
1600 South Second Street
Mount Vernon, WA 98273-5202

11. SUMMARY OF CHANGES IN THE RENEWAL 1

11.1 Changes throughout the AOP

The document was completely reformatted for uniformity in paragraph headings and spacing. All references to the Northwest Air Pollution Authority or NWAPA have been updated to Northwest Clean Air Agency or NWCAA.

Dates for all regulatory citations have been checked, and updated as necessary to show the most recent dates of adoption into the SIP by the EPA, and most recent dates of effectiveness for state/local only regulations.

11.2 Front page

The front page of the AOP has been changed to show the new logo and name of the Northwest Clean Air Agency.

11.3 Information page

The information page has been moved to immediately follow the front page. Previously it had been just after the Table of Contents.

The Air Operating Permit Number has been changed from “013” to “013 R1,” reflecting the first renewal.

Various dates have been changed to reflect the fact that five years have gone by since the original issuance of the AOP.

Theresa “Toby” Allen has replaced Anne Naismith as the Agency Engineer for the Tesoro refinery.

Facility contact information has been updated.

11.4 Attest page

The Attest page has been changed to reflect current regulations and personnel changes.

11.5 Table of Contents

The TOC now shows only two levels of outline throughout the document. Some of the major sections have been reorganized.

11.6 SECTION 1: Emission Unit Descriptions

New units have been added and modifications within the units have been updated to reflect current operations. Major changes are the addition of the amine treating unit 2 (ATU2) and selective hydrotreater unit (SHU), the proposed benzene saturation (BenSat) unit, and the new flue gas scrubber (FGS) on the catalytic cracking unit (CCU) and the associated diversion stack. Table 1.6, was revised to include hydrocarbon storage vessels (tanks). At the time of permitting, tanks 31 and 203 were out of service and tank 136 was in water storage service. The tanks were included in the permit because they have the potential, upon repair to the roof features, to be placed back into hydrocarbon service. Identification of the emissions inventory identifications have been added for ease of cross referencing. Further, the table has been updated to include the major compliance provisions applicable to any given emission unit or area. This table can be used as a summary and guide for the remainder of the permit.

Several emissions units are no longer part of the facility. The eighteen gas-fired power generators have been removed from Tables and other permit locations because the generators have been removed. The deasphalter unit has been removed – the unit was permanently shutdown in 2002 after a unit fire.

The unit previously known as the cat feed hydrotreater (CFH) is now the clean fuels hydrotreater (CFH).

11.7 SECTION 2: Standard Terms and Conditions

Regulatory citations have been updated for the terms and conditions. Dates were checked and updated wherever necessary for regulations cited. Two different versions (identified by the date) of the same regulatory citation may apply to the source if federal approval/ delegation lags behind changes made to the Washington Administrative Code (WAC) or the NWCAA Regulation. For NWCAA regulations, the date represents the most recent Board of Directors adoption date, which is identified as the "Passed" or "Amended" date in the NWCAA Regulation. The date associated with an OAC or PSD permit represents the latest revision date of that order. For a federal rule, the date is the rule's most recent promulgation date.

Chapter 173-401 WAC is not federally enforceable although the requirements of this regulation are based on federal requirements for the air operating permit program. Upon issuance of the permit, the terms based on Chapter 173-401 WAC will become federally enforceable for the source.

Wording in Section 2.4.1.4 for insignificant emissions units was changed from:

> "Where a permit does not require testing, monitoring, recordkeeping and reporting for insignificant emissions units or activities, the permittee may certify continuous compliance if there were no observed, documented, or known instances of noncompliance during the reporting period."

To:

> "This permit does not require testing, monitoring, reporting or recordkeeping for insignificant emission units or activities unless required in an underlying permit, such as an OAC condition.
>
> Tesoro shall use good industrial practice to maintain insignificant units. For such equipment, Tesoro shall also promptly repair defective equipment or shut down the related unit until defective equipement can be repaired. Compliance with this requirement shall be deemed to satisfy requirements of WAC 173-401-615 and 173-401-630(1).
>
> Tesoro may certify continuous compliance if there were no observed, documented, or known instances of noncompliance of an insignificant emission unit during the reporting period. Where an underlying condition requires testing, monitoring, recordkeeping and reporting for insignificant emission units or activities, the permittee may certify continuous compliance when the testing, monitoring and recordkeeping required by the permit revealed no violations during the period, and there were no observed, documented or known instances of noncompliance during the reporting period."

11.8 SECTION 3 Standard Terms and Conditions for NSPS and NESHAP

Several New Source Performance Standards (NSPS) and National Emission Standards for Hazardous Air Pollutants (NESHAP) apply to the Tesoro facility. These federal requirements are described in detail in Section 6 of this Statement of Basis (SOB).

The dates and other references have been updated in the applicable subsections of NSPS Subpart A contained in Section 3.1 of the AOP, but no substantial changes were required. Sections 3.1.10 through 3.1.14 deal with NSPS Subparts other than Subpart A, but they were not altered because they apply to several emissions units, and would they would have shown up multiple times throughout the other applicable conditions if they did not appear in Section 3.1.

A careful review of the original AOP showed that it did not contain any of the applicable sections of 40 CFR 61 Subpart A. The applicable portions of Subpart A of 40 CFR 61 were therefore copied directly from the Code of Federal Regulations into a new Section 3.2 of the AOP.

The applicable portions of Subpart A of 40 CFR 63 was moved to Section 3.3 of the AOP. Each applicable subpart of the Part 63 NESHAP contains a table in the back that lists out certain pieces of Subpart A that apply to that Subpart. The original AOP contained only those specific requirements that were called out in the applicable NESHAPs. Subpart UUU of 40 CFR 63 contained some but not all of the same Subpart A requirements, and it is likely that more NESHAP subparts will apply to Tesoro in the future. Each NESHAP subpart uses different parts of Subpart A. Section 3.3 of the AOP was revised to list Subpart A in its entirety in Subsection 3.3.1, with the applicability table for each “main” subpart in Subsections 3.3.2, 3.3.3, and 3.3.4.

11.9 SECTION 4 Generally Applicable Requirements

Dates have been updated. The fact that the federally approved NWCAA 365, 366 and the “Guidelines for Industrial Monitoring Equipment and Data Handling” have been replaced by NWCAA 367 and Appendix A - "Ambient Monitoring, Emission Testing and Continuous Emission and Opacity Monitoring" was discussed in the paragraphs preceding the table of requirements. NWCAA 367 and Appendix A have been updated to include current monitoring technology and methods.

The “gap filling” requirements in the MR&R column table description has been modified to reflect that the NWCAA authority is under WAC 173-401-615(1)(b) & (c), 10/17/02.

A general requirement implementing 40 CFR Part 61 Subpart FF has been added to the section because the regulation applies facility-wide. Specifically identified areas are addressed in Section 5 of the permit.

11.10 SECTION 5 Specifically Applicable Requirements

The various applicable NESHAP and NSPS requirements have been significantly reorganized and reformatted for brevity and clarity in the Citation columns of the tables in Section 5 and any other tables where they occur. A general approach to identify referenced sections of regulations by using *italicized text* was added for clarity. These regulatory citations do not apply directly, but are imposed by a separate regulation which appears first.

Many headers have been replaced by identifying the emission unit directly in the description column in order to clarify the requirement, assist in managing the table administratively and shorten the overall table. Headers remain where they are helpful for identifying large numbers of equipment.

CAM requirements were inserted into Table 5.3 for units V-307, V-308, V-353, V-356 for control of PM, and the flue gas scrubber for control of SO_2.

Terms of 40 CFR Part 63 Subpart CC have been simplified to include general references to group 1 process vents, group 1 tanks, etc. in order to clarify the requirements of the regulation. The statement of basis document includes the current status of Tesoro equipment under Subpart CC.

The Phase II Refinery MACT, NESHAP Subpart UUU had been promulgated on April 11, 2002, but the compliance date was April 11, 2005. Condition 5.3.13 was a "place-holder" in the original AOP, which required Tesoro to "Comply with the applicable requirements of the National Emission Standards for Hazardous Air Pollutants for Petroleum Refineries: Catalytic Cracking Units, Catalytic Reforming Units, and Sulfur Recovery Units by the April 11, 2005 compliance date." Applicable requirements of Subpart UUU and the compliance options exercised by the facility have been placed in appropriate locations in Tables 5.2 and 5.3.

Title 40 CFR 60 Subpart QQQ requirements were moved from Tables 5.5 in the original AOP to the dedicated Table 6.1 in the draft renewal AOP.

Several storage vessels (tanks) requirements were relocated to Table 5.6 where they are consolidated by common groups.

The effluent plant section of the permit has been replaced by the oily wastewater collection and treatment section in order to facilitate the incorporation and clarity of 40 CFR Part 61 Subpart FF requirements.

Table 11-1 is a list of the orders of approval to construct (OACs) included in the AOP. Several updates have been undertaken to bring the permits to current format and content expectations, clarifying the underlying requirements. The provisions of these OACs, listed in Table 11-1, have been incorporated into the renewal. Additional information on individual OACs is included in section 4 of this statement of basis.

Table 11-1 Active Orders of Approval to Construct (OAC)

Permit Issuance Date	OAC	Description	Startup Date	Supersedes
10/14/2009	308a	Sulfur curtailment plan	existing	308
10/14/2009	358a	Tanks 202 & 203	existing	358
10/14/2009	649b	Asphalt loading unit	existing	649a
7/13/2009	1037	BenSat unit construction		
1/8/2009	1031	Butane Isom optimization	2/2/09	517b
1/8/2009	989a	SHU - LDAR update	existing	989
1/8/2009	952b	ATU - LDAR update	existing	952a
1/8/2009	901a	DHT - LDAR update	existing	901
1/8/2009	896a	LSG2 - LDAR update	existing	896
1/8/2009	827b	LSG1 - LDAR update	existing	827a
1/8/2009	744a	ROSE - LDAR update	existing	744
8/22/2000	RO 26	F-101 low NO_X burners		
12/19/2007	390e	F-753 boiler fuel provisions change	12/19/2007	390d
7/10/2007	725b	flare gas recovery compressor J-887	existing	725a
3/29/2006	946a	CCU - hopper monitoring clarification	existing	946
3/6/2006	633a	CCU hopper baghouses - monitoring only	existing	633

Permit Issuance Date	OAC	Description	Startup Date	Supersedes
12/7/2005	947	CCU hopper baghouses	1/1/2006	
5/15/2001	768	One 465-hp emergency generator	6/1/2001	

Several permits have been superseded or are otherwise complete having no ongoing applicable requirements at the facility. Table 11-2 lists the permits that have been excluded from the AOP. Specific information on the reasons for exclusions can be found in Section 4.1 of this SOB.

Table 11-2 Permits Excluded from the AOP

Issued	OAC	Description	Superseded by
10/14/2009	705a	JFT	
10/14/2009	750a	Tank 3	
10/14/2009	651a	DHT	
10/14/2009	362b	WWTP	
10/30/2009	1050a	Tank 231/Isom feed in NHT	
6/7/2007	989	Selective hydrogenation unit	989a
9/18/2006	961	Coker / SWS modification	rescinded
5/15/2007	952a	Acid gas line modification	952b
3/31/2006	952	SRU / ATU modification	952a
11/19/2005	946	CCU FGS	946a
8/1/2005	873	FCC FGS - Superceeded by 946	946
2/16/2005	827a	LSG1 - clarifications	827b
2/1/2005	901	DHT - ULSD	901a
12/22/2004	896	LSG2 - CGS, DHT/CFH	896a
5/22/2003	827	LSG1 -	827a
5/21/2003	769	18 + 6 gas generators	out of service
9/24/2002	725a	flare gas recovery comp J-887	725b
12/14/2001	753	CCU modification	946
5/4/2001	750	crude tank and pump	750a
4/23/2001	765	12 1.8 MW gen	out of service
3/7/2001	744	ROSE unit	744a
6/12/2000	725	flare gas recovery comp J-887	725a
8/10/1999	705	jet fuel hydrotreater	705a
4/25/2000	362a	WWTP covers	362b
11/4/1994	517b	BI unit upgrade	1031
9/23/1994	517a	BI unit upgrade	517b
9/7/1994	517	BI unit upgrade	517a
5/4/1993	1050	Kb Tank 231/isom feed prep	1050a

11.11 SECTION 6 Common Requirements

This new section has been inserted. Requirements are in the same tabular form as in Section 5 and are imposed on equipment as referenced in Section 5.

The new Table 6.1, which contains all the applicable 40 CFR 60 Subpart QQQ—Standards of Performance for VOC Emissions From Petroleum Refinery Wastewater Systems. The regulations was inserted here to improve clarity of the requirements.

The new Table 6.2 contains the terms of 40 CFR Part 60 Subpart VV, which applies to existing equipment through the underlying regulations cited in Table 5.

The new Table 6.3 contains the terms of 40 CFR Part 60 Subpart VVa, which applies to new equipment through underlying regulations cited in Table 5. There is only one proposed unit that will be subject to this regulation upon startup, the Benzene Saturation Unit.

11.12 SECTION 7 Alternative Monitoring Plans

This section was reformatted and made into its own section, but the words are essentially unchanged for monitoring SO_X from propane combustion unit F-753.

The alternative monitoring plan for the Cat reformer unit under 40 CFR Part 63 Subpart UUU has been included in Section 7.2.

11.13 Compliance Schedule WAC 173-401-630(3) and WAC 173-401-520(2)(h)(iii)

This compliance schedule has been removed, because the schedule has been followed and Tesoro is currently in compliance with all applicable requirements.

11.14 SECTION 8 Inapplicable Requirements

No changes have been made to this section.

12. DEFINITIONS AND ACRONYMS

Definitions are assumed to be those found in the underlying regulation. A short list of definitions has been included to cover those not previously defined.

An "applicable requirement" is a provision, standard, condition or requirement in any of the listed regulations or statutes as it applies to an emission unit or facility at a stationary source.

“Ecology” means the Washington State Department of Ecology.

An "emission unit" is any part or activity of a stationary source that emits or has the potential to emit any regulated air pollutant.

“Tesoro” means Tesoro Refining and Marketing Company

“Oil” means “on-road specification diesel fuel,” containing no more than 0.05 percent sulfur by weight, as specified in 40 CFR § 80.29.

A “permit” means for the purposes of the air operating permit program an air operating permit issued pursuant to Title 5 of the 1990 Federal Clean Air Act.

“Technology-Based Emission Standard” means a standard, the stringency of which is based on determinations of what is technologically feasible considering relevant factors.

“State” means for the purposes of the air operating permit program NWCAA or the Washington State Department of Ecology.

The following is a list of Acronyms used in the Air Operating Permit and/or Statement of Basis:

AIRS	Aerometric Information Retrieval System
Alky	Alkylation unit
ASTM	American Society for Testing and Materials
ASIL	Acceptable Source Impact Level
BenSat	benzene saturation unit
BFW	boiler feed water
BI	butane isomerization
CCU	catalytic cracking unit
CGS	catalytically cracked gas splitter
CR	catalytic reformer
CFH	clean fuels hydrotreater
CAM	Compliance Assurance Monitoring (40 CFR 64)
CEM	continuous emission monitor
CEMS	continuous emission monitoring system
CFR	Code of Federal Regulations
CO	carbon monoxide
CU	crude distillation unit
DHT	distillate hydrotreater

EPA The United States Environmental Protection Agency

FCAA Federal Clean Air Act

GRU gas recovery unit

HAP hazardous air pollutant (as defined in FCAA)

HRSG heat recovery steam generator

ISO International Standards Organization

JFT jet fuel treater

MACT maximum achievable control technology

MMBtu Million British Thermal Units

MR&R monitoring, recordkeeping and reporting requirements

NHT naphtha hydrotreater

NESHAP National Emission Standards for Hazardous Air Pollutants

NOC Notice of Construction

NOV Notice of Violation

NO_X oxides of nitrogen

NSPS New Source Performance Standard

NSR New Source Review

NWCAA Northwest Clean Air Agency

OAC Order of Approval to Construct

O_2 oxygen

PM particulate matter

PM_{10} particulate matter less than 10 microns in diameter

$PM_{2.5}$ particulate matter less than 2.5 microns in diameter

ppmdv parts of pollutant per million parts of dry stack gas on a volumetric basis

PSD Prevention of Significant Deterioration (federally required program for pre-construction review of sources)

psia pounds per square inch absolute

QA/QC quality assurance/quality control

ROSE residuum oil supercritical extraction (ROSE)

RCW Revised Code of Washington

SCR selective catalytic reduction

SHU selective hydrogenation unit

SIP state implementation plan

SO_2 sulfur dioxide

STP standard temperature and pressure (0° C and 14.7 psia)

SWS sour water splitter

TAP	toxic air pollutant (as defined in WAC 173-460)
VF	vacuum flasher unit
VOC	volatile organic compounds
WAC	Washington Administration Code
WWTP	wastewater treatment plant