Statement of Basis for the Air Operating Permit

- FINAL -

Shell Puget Sound Refinery

Anacortes, Washington

May 5, 2015

northwest Clean Air agency

Serving Island, Skagit & Whatcom Counties

PERMIT INFORMATION

Equilon Enterprises LLC dba Shell Oil Products US
Puget Sound Refinery
8505 South Texas Road, Anacortes, Washington

SIC: 2911
NAICS: 324110

NWCAA ID: 1005-V-S

Responsible Corporate Official

Shirley Yap
General Manager
PO Box 622
Anacortes, WA 98221
(360) 293-1701

Corporate Inspection Contact

Tim Figgie
Sr. Staff Engineer
PO Box 622
Anacortes, WA 98221
(360) 293-1525

Northwest Clean Air Agency

1600 South Second Street
Mount Vernon, Washington 98273-5202
(360) 428-1617

Prepared by:

Crystal Rau
Air Quality Engineer
(360) 419-6771

Air Operating Permit Number:	Issuance Date:
014R1M1	November 5, 2014
Permit Modifications:	Modification Date:
Modification 1	May 5, 2015
Supersedes Permit Number:	Expiration Date:
014R1	November 5, 2019
Application Date:	Renewal Application Due:
May 24, 2007 (date received)	November 5, 2018

TABLE OF CONTENTS

1. INTRODUCTION AND GENERAL FACILITY DESCRIPTION 5
1.1 Facility Description 5
1.2 Permit Revisions during Administrative Amendment of First Renewal 10
1.3 Permit Revisions during First Renewal 10
1.4 Enforcement History 13
1.5 Periodic Reports 15
1.6 Annual Emission Inventory 16

2. GENERAL REGULATORY REQUIREMENTS 18
2.1 New Source Performance Standards 18
2.2 National Emission Standards for Hazardous Air Pollutants (NESHAP/MACT) 25
2.3 Leak Detection and Repair (LDAR) 35
2.4 Continuous Emission Monitoring Systems 38
2.5 Opacity 39
2.6 Compliance Assurance Monitoring 40
2.7 Acid Rain Program 45
2.8 Risk Management Plan (RMP) 45
2.9 Greenhouse Gas (GHG) Regulation 45

3. PROCESS DESCRIPTIONS, CONSTRUCTION HISTORY AND REGULATORY APPLICABILITY 47
3.1 Vacuum Pipe Still (VPS) 47
3.2 Delayed Coking Unit (DCU) 49
3.3 Fluid Catalytic Cracking Unit (FCCU) 51
3.4 Catalytic Polymerization and Nonene Units 56
3.5 Catalytic Reforming Units (CRU) 58
3.6 Alkylation Units (Alky) 61
3.7 Hydrotreating Units (HTU1, 2 & 3), Isomerization Unit, and Benzene Reduction Unit 62
3.8 Sulfur Recovery Unit (SRU) 66
3.9 Utilities 69
3.10 Receiving, Pumping, and Shipping 74
3.11 Flares 77
3.12 Internal Combustion Engines 79
3.13 Wastewater and Effluent Plant 82
3.14 Storage Tanks/Vessels 86

4. AIR OPERATING PERMIT ADMINISTRATION 90
4.1 Permit Assumptions 90
4.2 Permit Elements 92
4.3 Public Docket 96
4.4 Definitions and Acronyms 96

APPENDIX A 100

APPENDIX B 102

APPENDIX C 105

1. INTRODUCTION AND GENERAL FACILITY DESCRIPTION

Puget Sound Refinery (PSR), owned by Equilon Enterprises LLC dba Shell Oil Products US, is required to obtain an air operating permit (AOP or Permit) because it has the potential to emit all of the following:

- 100 tons or more of oxides of nitrogen (NO_X), sulfur dioxide (SO_2), particulate matter, volatile organic compounds (VOC) , and carbon monoxide (CO);
- 10 tons per year or more of any hazardous air pollutant (HAPs);
- 25 tons per year or more of a combination of HAPs; and
- Both 100,000 tons CO_2e per year and 100 tons greenhouse gases (GHGs) per year.

The purpose of this Statement of Basis (SOB) is to set forth the legal and factual basis for the conditions of the Air Operating Permit (AOP). This document also provides background information to facilitate review of the permit by interested parties. The Statement of Basis is not a legally enforceable document in accordance with WAC 173-401-700(8).

The Northwest Clean Air Agency (NWCAA or Agency) issued the original AOP for PSR on November 26, 2002. The AOP was modified and re-issued on September 24, 2004. The expiration date was November 25, 2007. PSR submitted a timely renewal on May 24, 2007 which was determined complete on June 18, 2007. See SOB Section 1.2 for the changes made to the AOP during this renewal and subsequent modifications. See SOB Appendix A for changes made during permit modification prior to this renewal.

1.1 Facility Description

The facility produces petroleum-based fuels as classified under the Standard Industrial Classification code 2911. It is located on March Point, a heavy industrial area near Anacortes, Washington. The refinery was originally built by Texaco, Inc. and began operation in 1958. Texaco owned and operated the facility until Texaco formed an alliance with Shell Oil Company on January 1, 1998. The resulting company was Equilon Enterprises LLC (Equilon). In April of 2002, Shell purchased Texaco's interest in Equilon. As such, PSR is now owned by Equlion Enterprises LLC dba Shell Oil Products US.

PSR also owns and operates a cogeneration facility on the refinery site. The cogeneration facility was originally the March Point Cogeneration Company (MPCC), which PSR took possession of in February 2010.

Air Liquide and Linde operate hydrogen plants on property owned by PSR and adjacent to the refinery. However, both Air Liquide and Linde are independent companies and are permitted separately from PSR. Both Air Liquide and Linde are required to obtain Title V air operating permits.

PSR is located between Highway 20 to the south and the Tesoro refinery to the north. Figure 1 shows the layout of the process unit areas, storage tanks and the refinery's orientation to local roadways. Figure 2 is an aerial view of the refinery.

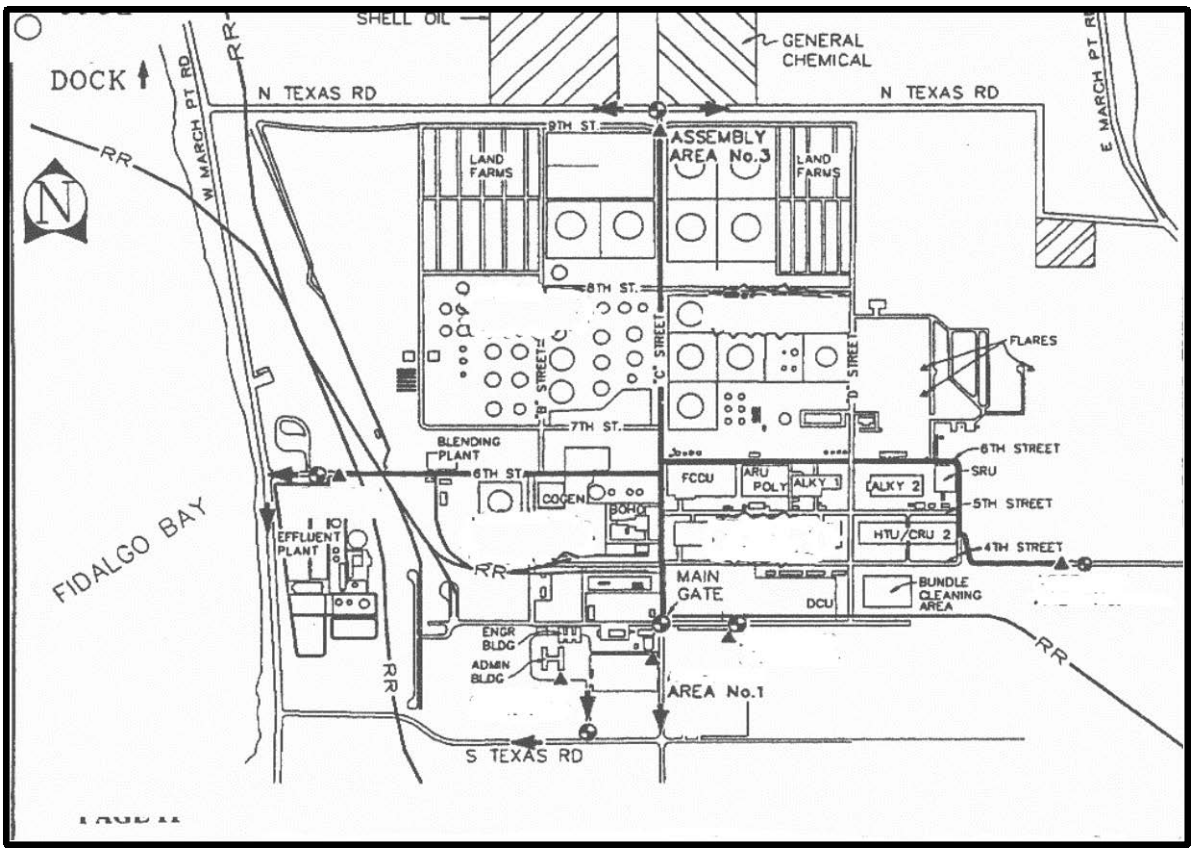

Figure 1 Refinery Plot Diagram

Figure 2 Aerial View of the Refinery

PSR refinery has an annual average crude processing rate of approximately 150,000 barrels per day. Refining crude oil produces petroleum products, including gases, gasoline, distillate fuels, fuel oils, and petroleum coke. Processing will utilize any or all of the following four basic processes: distillation, conversion (including cracking, reforming and polymerization), purification to remove contaminants, and blending. There are ancillary structures for storage, maintenance, steam generation, and administrative activities.

The refining process generates usable byproducts along with waste streams, both hazardous and non-hazardous. PSR operates a wastewater treatment facility that treats refinery wastewater and discharges the treated water into Fidalgo Bay. Hazardous materials are shipped off-site to hazardous waste disposal facilities, and non-hazardous materials can be applied to landfarms located on PSR property or are sent off site. Elemental sulfur is generated during the removal of sulfur from hydrocarbon streams to produce low sulfur fuels and blending products. Elemental sulfur is a usable byproduct that is shipped off-site to companies that use the elemental sulfur as a feedstock.

PSR is organized into major processing areas. Each processing area is described in more detail in the body of the Statement of Basis. Air emissions at PSR are generated primarily as a result of products of combustion in heaters/boilers and from fugitive emissions from leaking process equipment or from storage tank and product transfer losses.

PSR processes primarily Alaskan North Slope (ANS) and various Canadian crude oils, but may also run small amounts of other crude oils purchased on the spot market. At PSR, the main steps in processing include separation by distillation and downstream conversion by cracking, reforming and combination. Figure 3 shows a simplified process flow diagram of PSR's refining process. PSR utilizes duplicate Catalytic Reformer Units (CRUs), Hydrotreater Units (HTUs), Alkylation (ALKYs) and Sulfur Recovery Units (SRUs) to provide operational flexibility.

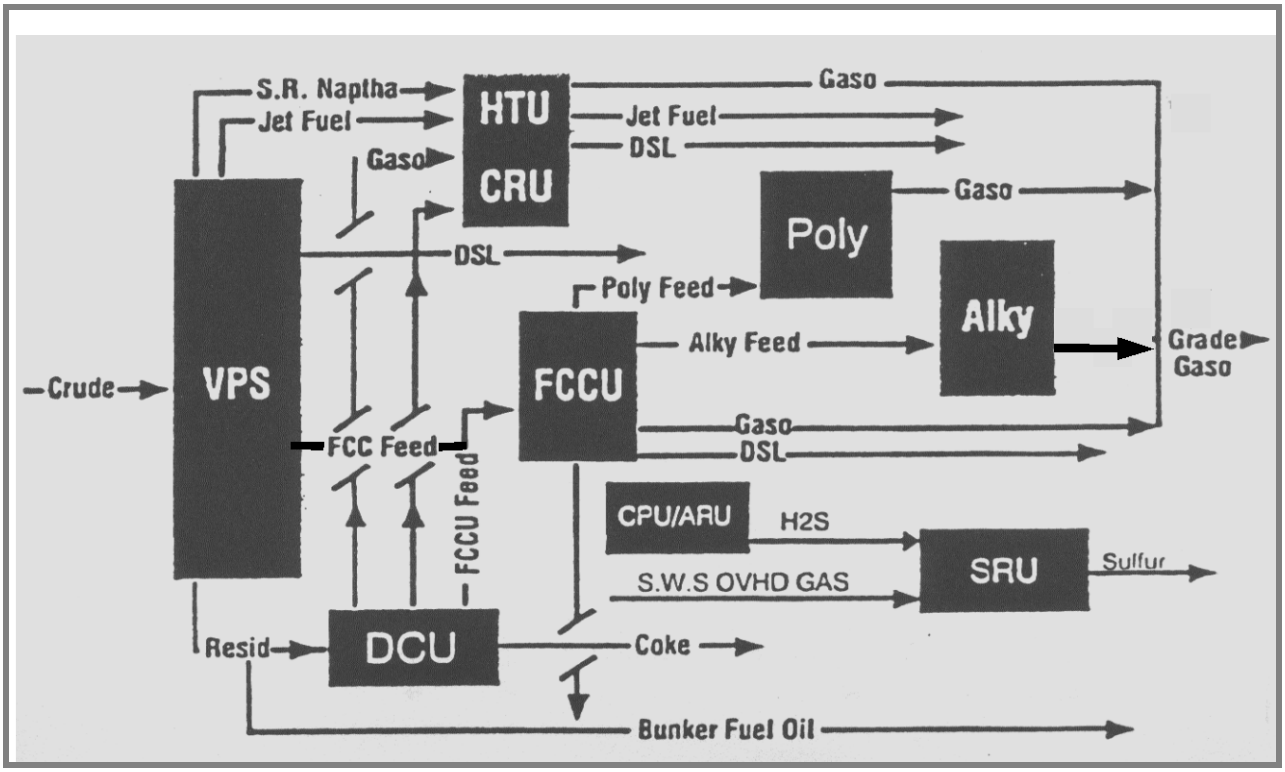

Figure 3 Process Flow Diagram

The PSR facility began operation in 1958. The major projects completed since original construction include:

- 1976 Octane Improvement Project consisting of the installation of CO Boiler (COB) 2, the Catalytic Polymerization Unit (POLY), HTU2, CRU2, Alky2, Cooling Tower 2, and an expansion of the Crude processing unit
- 1981 installation of the Sulfur Recovery Unit (SRU)
- 1983 installation of the Delayed Coking Unit (DCU)
- 1990/91 installation of EP controls
- 1998 FCCU Vertical Riser Project/POLY Expansion/Vacuum Resid Uplift
- 1999 SRU expansion
- 2001 installation of seven temporary 5.2 MW combustion turbines. Removed in 2003
- 2003 installation of HTU3 to meet low sulfur gasoline requirements
- 2003 construction of a new Sulfur Recovery Unit (SRU4)
- 2004 modification of HTU2 to facilitate the production of ultra low sulfur diesel
- 2005 installation of a new wet gas scrubber (WGS) to control PM and SO_2 from the FCCU/CO Boilers
- 2006 installation of flare gas recovery unit (FGR)
- 2010 PSR took possession of MPCC
- 2011 construction of the Benzene Reduction Project to meet the gasoline benzene standards
- 2013 shutdown of CRU1 heaters (potentially temporary)

Numerous other smaller projects have been completed at PSR and are identified within the associated process area descriptions in this Statement of Basis. Note that no Prevention of Significant Deterioration (PSD) permits have been issued to PSR.

Table 1-1 is a list of the Orders of Approval to Construct (OACs), Regulatory Orders (ROs), and Compliance Orders (COs) included in the AOP. Several updates have been undertaken to bring the permits to current format and content expectations, clarifying the underlying requirements. The provisions of these Orders have been incorporated into the AOP renewal, except as discussed in the individual process unit sections. Also, the OAC numbers marked with asterisks in Table 1-1 are applicable to the listed equipment but have no ongoing requirements. As such, they are listed in AOP Section 1 marked with asterisks but are not included in AOP Section 5. Additional information on individual OACs is included in SOB Section 3.

Table 1-1: Active OACs, ROs, and COs

Permit Issuance Date	OAC	Description	Startup Date	Super-sedes
April 10, 2013	241a	Storage Tank - Tank 70 - OAC cleanup	existing	241
April 10, 2013	262a*	Storage Tank - Tank 15 - OAC cleanup	existing	262
April 10, 2013	286b	Hydrotreater 1 - OAC cleanup	existing	286 & 286a
April 10, 2013	295a*	Storage Tank - Tank 38 - OAC cleanup	existing	295
April 12, 2013	296a	Nonene Unit – Included QQQ, OAC cleanup	existing	296
April 10, 2013	297a	Storage Tank - Tank 45 – Remove NSPS Kb as inapplicable, OAC cleanup	existing	297

Permit Issuance Date	OAC	Description	Startup Date	Super-sedes
April 10, 2013	316a*	Storage Tank - Tank 71 - OAC cleanup	existing	316
October 10, 2012	321b	CRU1 Heaters - Triggered GGGa due to Linde project, add 5-year NOx testing, OAC cleanup	existing	321a
April 12, 2013	337a	Storage Tank - Tank 39 - OAC cleanup	existing	337
April 10, 2013	341a	Storage Tank - Tank 60 - OAC cleanup	existing	341
April 10, 2013	345a*	Storage Tanks - Tanks 72, 73, 74 – OAC cleanup	existing	345
April 10, 2013	380c	Truck Rack - OAC cleanup	existing	380b
April 12, 2012	475h	Cogens 1&2 – Changed owner/operator name, removed ISO standard conditions, eliminated PM and VOC limits, OAC cleanup	existing	475g
April 12, 2012	476g	Cogen 3 - Changed owner/operator name, removed ISO standard conditions, eliminated unburned HC limits, OAC cleanup	existing	476f
April 10, 2013	514a*	EP controls - OAC 332, 416, 417, & 514 combined and clean up	existing	514
January 30, 2014	623f	FCCU - Cleanup and extract out Equilon Consent Decree requirements	existing	623e
April 10, 2013	628d	DCU heater 15F-100 - Remove MMBtu/hr emission limit and incorporated limit averaging periods	existing	628c
January 30, 2014	630c	HTU2 ULSD – OAC cleanup, add ongoing compliance demonstration, clarify LDAR requirements	existing	630b
May 3, 2010	684b	VPS Heater 1A-F8 - Clarify testing requirements	existing	684a
March 20, 2009	757a	Diesel Railcar Loading – OAC cleanup	existing	757
March 20, 2009	772b	Butadiene – OAC cleanup	existing	772a
April 17, 2009	787e	HTU3 – OAC cleanup	existing	787d
February 27, 2002	797	Wharf Generator	existing	--
April 17, 2009	828a	SRU4 – OAC cleanup and language clarification	existing	828
January 30, 2014	883b	Isomerization Unit – Clarify LDAR requirements	January 19, 2006	883
January 30, 2014	887a	Alky1 spare flare drum pump – Clarify LDAR requirements	September 22, 2005	887
January 30, 2014	918b	Flare gas recovery – Clarify LDAR requirements	June 27, 2006	918a
April 12, 2013	919a	VPS Heater 1A-F5 & 1A-F6 - OAC cleanup	September 2000	919

Permit Issuance Date	OAC	Description	Startup Date	Super-sedes
April 12, 2013	929b	VPS Heater 1A-F4 - OAC cleanup	January 2006	929a, RO20, RO20a
July 22, 2009	1045*	Benzene Reduction Project	April 5, 2011	--
July 22, 2009	1046	Ethanol Unloading & Storage Project	July 6, 2010	--
April 12, 2013	RO14a	Coke Transport - RO Cleanup	--	RO14
April 10, 2013	CO 07	Memorialize NSPS J applicability to heaters & boilers from CD	--	--
April 29, 2013	CO 08	Tank 38 - Memorialize slotted guidepole requirement from STERPP agreement	--	--
February 12, 2014	CO 10	FCCU – Memorialize Equilon Consent Decree requirements	--	--

1.2 Permit Revisions during Administrative Amendment of First Renewal

On March 27, 2015, The NWCAA received a request from Shell Puget Sound Refinery for an administrative amendment to the first renewal AOP. On May 5, 2015, AOP #014R1 was revised as allowed in WAC 173-401-720(1)(b), including renumbering the permit to #014R1M1, updating the issuance date, and changing the responsible official to Shirley Yap, General Manager.

1.3 Permit Revisions during First Renewal

The NWCAA received the application for the first AOP renewal on May 24, 2007. The following revisions have been made to the permit during this renewal.

- Equilon Enterprises LLC dba Shell Oil Products US took full possession of the adjacent cogeneration units formerly owned and operated by the March Point Cogeneration Company (MPCC) on February 1, 2010. Rolled the requirements for the cogeneration units (MPCC) (AOP 005R1) into the refinery AOP.
- Removed the Consent Decree compliance schedule from the AOP. A brief summary of the Consent Decree(s) is included in this Statement of Basis.
- Replaced the references to NWCAA 365, 366 and the “Guidelines for Industrial Monitoring Equipment and Data Handling” with NWCAA 367 and NWCAA Appendix A - "Ambient Monitoring, Emission Testing and Continuous Emission and Opacity Monitoring" in the paragraphs preceding the table of requirements. NWCAA 367 and NWCAA Appendix A have been updated to include current monitoring technology and methods but are not materially different from the previous rule and guideline.
- Changed the “gap filling” marker in the MR&R column tables from “Directly enforceable under WAC 173-401-615(1)(b) & (c), 10/17/02.” to “Directly Enforceable.”
- Updated the source contact information and general permit information on the permit information page.
- Revised AOP Section 1 to reflect the current list of emission units and regulatory applicabilities. Added heat exchangers pursuant to 40 CFR 63 Subpart CC.
- Fixed roof storage Tank 203 has been demolished and was removed from the AOP.
- Revised AOP Sections 2 and 3 to be consistent with current NWCAA format and content. Updated citations and dates as appropriate.

- Revised AOP Sections 4 and 5 with current federal, state and NWCAA regulatory citations and their applicable requirements to reflect any new or revised applicable regulation. These include but are not limited to:

  Added and/or revised the following New Source Performance Standards (NSPS)

  - Added 40 CFR 60 Subpart Ja – Standards of Performance for Petroleum Refineries for Which Construction, Reconstruction, or Modification Commenced After May 14, 2007
  - According to a letter from PSR dated October 13, 2004, PSR conducted a review pursuant to the Equilon Consent Decree and determined that Tanks 12, 13, 14, 60, 61, 62, 70, 71, 72, and 73 are subject to 40 CFR 60 Subpart Kb. Added Subpart Kb applicability to listed tanks.
  - Added 40 CFR 60 Subpart GGGa – Standards of Performance for Equipment Leaks of VOC in Petroleum Refineries for which Construction, Reconstruction, or Modification Commenced After November 7, 2006
  - Added 40 CFR 60 Subpart IIII - Standards of Performance for Stationary Compression Ignition Internal Combustion Engines

  Added and/or revised the following National Emission Standards for Hazardous Air Pollutants (NESHAP)

  - PSR converted Tank 74 from an equalization tank prior to the bioreactor to a preliminary bioreactor equipped with blowers and fed with the same biota as the traditional bioreactor. Because it is no longer part of the wastewater treatment unit, the tank is no longer subject to 40 CFR 61 Subpart FF requirements.
  - The Marine Terminal was considered not subject to 40 CFR 63 Subpart Y (National Emission Standards for Marine Tank Vessel Loading Operations) and that regulation was included in the inapplicable requirements. Technically, the Marine Terminal was subject to 40 CFR 63 Subpart Y as an existing offshore loading terminal but had no requirements. 40 CFR 63 Subpart Y was modified on April 21, 2011 such that existing offshore loading terminals must meet the submerged fill standards. This requirement is listed in AOP Section 5.10.
  - Explicitly incorporated 40 CFR 63 Subpart UUU requirements.
  - Tank 64 stores a fuel additive and has been added to the Receiving, Pumping, and Shipping (RP&S) Unit in AOP Section 1.10.5. Apparently this tank has always been on the site, but was not included previously. Tank 64 is subject to 40 CFR 63 Subpart EEEE (Organic Liquid Distribution) but had no requirements. However, 40 CFR 63 Subpart EEEE was modified on April 23, 2008 such that tanks such as Tank 64 are required to keep documentation that verifies the storage tank is not required to be controlled. This requirement is listed in the AOP Section 5.10.
  - Internal Floating Roof Tank 54 changed service from diesel to gasoline in 2009. Went from 40 CFR 60 Subpart CC (Refinery MACT 1) Group 2 to Group 1 service.
  - Added 40 CFR 63 Subpart ZZZZ -Stationary Reciprocating Internal Combustion Engines
  - Added 40 CFR 63 DDDDD – Industrial, Commercial, and Institutional Boilers and Process Heaters
  - Added 40 CFR 63 Subpart GGGGG – Site Remediation (recordkeeping only)
- Added 40 CFR 64 Compliance Assurance Monitoring (CAM) to Section 5 reflecting the CAM plan submitted by the refinery.
- Revised Section 5 with new or revised orders (i.e., OAC, ROs, and COs). These include but are not limited to:

- Tank 76 was incorrectly listed as being permitted under OAC 345. This tank was constructed as part of project to automate cleanout of the API in the early 1990s. This tank was never placed into service and is currently not being used.
- RO17 was an Emission Reduction Credit (ERC) issued on September 14, 1995 for the installation of an internal floating roof on Tank 30. ERCs expire after 10 years; as such, RO17 expired in 2005 and is removed from the AOP.
- According to OAC 919 Condition 8 and OAC 929a Condition 8, upon issuance of both OAC 919 and 929a and upon installation of the emission controls required by the Heater and Boiler Consent Decree and both OACs, NWCAA Revised Regulatory Order and Emission Reduction Credit 20b is superseded and no longer in effect. The controls required by OAC 919 and OAC 929a have both been completed; as such, all of the conditions related to Regulatory Order 20b are removed from the AOP.
- The NWCAA issued RO21 on April 14, 2000 establishing a voluntary NO_X emission limit on the Erie City Boiler. The NWCAA rescinded this Order on October 10, 2012 upon request by PSR because these limits are no longer desired.
- On April 14, 2000, two regulatory orders (ROs 22 and 23) were issued by the NWCAA to create a federally enforceable voluntary cap on NOX emissions at CRU2. The NWCAA rescinded these orders on October 10, 2012 upon request by PSR because these limits are no longer desired.
- On April 14, 2000, Regulatory Order 24 was issued establishing a voluntary NO_X limit of 32 tons based on a 12-month rolling average and 7.5 tons per hour limit based on a daily average. The NWCAA rescinded this Order on October 10, 2012 upon request by PSR because these limits are no longer desired.
- On April 14, 2000, the NWCAA issued Regulatory Order 25 thereby establishing a voluntary NO_X limit from all three flares combined to 2,200 lb/hour, daily average. The NWCAA rescinded this Order on October 10, 2012 upon request by PSR because these limits are no longer desired.
- Included Compliance Order (CO) 07 to memorialize the Heater and Boiler Consent Decree mandate that subject refinery heaters and boilers are subject to 40 CFR 60 Subpart J.
- Included CO 08 to memorialize the requirement to install and maintain a cover on the slotted guidepole opening on Tank 38 resulting from the Storage Tank Emission Reduction Partnership Agreement with EPA.
- Included CO 10 to memorialize the Equilon Consent Decree mandates related to the FCCU.

- The existing 555 hp EP Emergency Outfall Pump engine was decommissioned in 2013 and replaced with the 500 hp EP Outfall Pump engine. The same pump is being used with the new engine; the unit is keeping the same 9QG68 designation.
- The Light hydrocarbon slop degassing drum vent (21N-C110) has been reclassified as being subject to 40 CFR 61 Subpart FF. As such, it is not a Miscellaneous Process Vent (MPV) under 40 CFR 60 Subpart CC. The requirements for this vent are covered under the Effluent Plant and Sewer System (AOP Section 5.13.1). Removed individual reference to this vent as MPV from the AOP.
- Revised AOP Section 6 with current federal, state and NWCAA regulatory citations and their applicable requirements to reflect any new or revised applicable regulation. These include but are not limited to adding and/or revising the following:
  - Removed the visible emission ongoing compliance demonstration for combustion units while firing oil in AOP Section 6. None of the process units are currently configured to fire oil; if PSR were to want the ability to fire oil, it would constitute a modification and

require review under New Source Review. The Cogens are allowed to fire both avjet and low sulfur diesel; the ongoing compliance demonstration for which is handled in AOP Section 5.

- Added 40 CFR 60 Subpart VVa - Standards of Performance for Equipment Leaks of VOC in the Synthetic Organic Chemicals Manufacturing Industry – Common leak detection and repair requirements
- Added 40 CFR 60 Subpart QQQ – Standards of Performance for VOC Emissions From Petroleum Refinery Wastewater Systems – Common individual drain systems requirements
- Added 40 CFR 63 Subpart DDDDD— National Emission Standards for Hazardous Air Pollutants for Major Sources: Industrial, Commercial, and Institutional Boilers and Process Heaters – Common boiler and heater requirements
- Added 40 CFR 63 Subpart CC — National Emission Standards for Hazardous Air Pollutants From Petroleum Refineries – Common heat exchanger requirements

- Merged and revised the list of inapplicable requirements into one refinery-wide list in Section 7.

1.4 Enforcement History

A summary of Notices of Violation (NOVs) issued to the refinery by the NWCAA from January 2008 through October 2013 is presented in Table 1-2. Each violation listed in the table has been resolved through a combination of penalty assessments and by corrective action taken by the source.

Table 1-2: Notice of Violations Issued to Shell PSR

Case No	Violation Date	Issue Date	Description
3695	7/26/07	8/6/08	Amine foaming in the SRU4 stripper tower resulting in an exceedance of the 250 ppmvd SO_2 @ 0% O_2 12-hour limit at the incinerator (HPV). SO_2 emissions over the limit were estimated at 181 pounds SO_2. Penalty paid $5,000.
3702	3/4/07	8/6/08	Plugged steam trap in the SRU4 Claus catalyst bed causing condensate build-up resulting in an exceedance of the 250 ppmvd SO_2 @ 0% O_2 12-hour limit at the incinerator (HPV). SO_2 emissions over the limit were estimated at 78 pounds SO_2. Penalty paid $4,000.
3703	3/1/08	8/6/08	Fouled trays in the SRU4 wastewater stripper exacerbated by an increase reflux rate resulting in an exceedance of the 250 ppmvd SO_2 @ 0% O_2 12-hour limit at the incinerator (HPV). SO_2 emissions over the limit were estimated at 29 pounds SO_2. Penalty paid $4,000.
3710	7/9/08	7/28/08	Odor nuisance from the wastewater treatment plant documented at complainant's residence in the 8000 block of State Route 20. Penalty paid $5,000.
3726	8/2/07	10/17/08	Continued to feed light slops to Tank 12 after the roof was sunk (HPV). Penalty paid $18,000.
3740	7/28/08	11/13/08	Inadvertent shutdown of incorrect SRU resulting in exceedances of the 250 ppmvd SO_2 @ 0% O_2 12-hour limit at the incinerator (HPV) and the 1,000 ppmvd SO_2 @ 0% O_2 60-minute average at the flare. Excess emissions from this event are estimated at 1,560 pounds SO_2 from the SRU4 incinerator and 202 pounds SO_2 from the flare. Penalty paid $7,000.

Case No	Violation Date	Issue Date	Description
3783	6/2/09	8/18/09	Odor nuisance impacts from the wastewater treatment plant documented at complainant's residence in the 8200 block of State Route 20 in Anacortes. Penalty paid $7,000.
3784	7/2/09	8/18/09	Odor nuisance impacts from the wastewater treatment plant documented at complainant's residence in the 8200 block of State Route 20 in Anacortes. Penalty paid $7,000.
3785	7/9/09	8/18/09	Odor nuisance impacts from the wastewater treatment plant documented at complainant's residence in the 8600 block of State Route 20 in Anacortes. Penalty paid $7,000.
3791b	5/22/08	2/16/10	Cogen CEMS data availability for three monitors less than the required 90%. Penalty paid $20,000.
3897	12/26/10	4/7/11	Cogen 3 CEMS left in "maintenance mode" for extended period of time causing ammonia injection rate to be reduced resulting in an exceedance of 9 ppmvd @ 15% O_2 calendar day average (HPV). Excess emissions from this event are estimated at 226 pounds NO_X. Penalty paid $25,000.
3908	5/19/11	6/2/11	Emissions from the FCCU Fresh Catalyst Hopper Cyclone exhaust were observed in excess of 20% opacity for more than 3 minutes. Penalty paid $5,000.
3914	10/15/10	8/3/11	Improper management on two different dates of the DCU blowdown gas while the DCU blowdown recovery compressor was inoperative resulting in an exceedance of 1,000 ppm SO_2 @ 7% oxygen, 60-consecutive-minute average at the flare. Total excess emissions from these events are estimated at 129 pounds SO_2. Penalty paid $5,000.
3941	12/9/11	12/20/11	Odor nuisance from the wastewater treatment plant documented at the complainant's residence in the 14000 block of Ashley Place, Anacortes, WA. Penalty paid $7,000.
3948	5/10/11	4/10/12	Testing of the protective shutdown systems at SRU3 caused the unit to trip resulting in an exceedance of the 250 ppmvd SO_2 @ 0% O_2 12-hour limit at the incinerator (HPV). Excess emissions from this event are estimated at 4.6 pounds SO_2. No penalty assessed due to being below priority thresholds.
3949	3/6/10	4/10/12	Tank 54 changed from 40 CFR 63 Subpart CC Group 2 to Group 1 service. Failure to promptly submit NCS and conduct timely annual visual inspection. When the inspection was conducted, deficiencies in the tank seal were found (HPV). Penalty paid $50,000.
3950	3/7/11	4/17/12	Failure of Tank 105 level indicator causing SRU4 to trip and an upset of SRU3 resulting in an exceedance of the 250 ppmvd SO_2 @ 0% O_2 12-hour limit at both incinerators (HPV) and the 1,000 ppmvd SO_2 @ 0% O_2 60-minute average at the SRU4 incinerator. Total excess emissions from this event are estimated at 217 pounds SO_2. Penalty paid $6,000.
3956	8/16/11	4/17/12	Incorrect startup procedure caused trip of TGTU1 resulting in an exceedance of the 250 ppmvd SO_2 @ 0% O_2 12-hour limit at the SRU3 incinerator (HPV). Excess emissions from this event are estimated at 27 pounds SO_2. Penalty paid $5,000.
3980	9/4/12	10/1/12	Odor nuisance impacts from the wastewater treatment plant documented at complainant's residence in the 8200 block of State Route 20 in Anacortes. Penalty paid $8,000.

Case No	Violation Date	Issue Date	Description
3987	10/2/12	10/3/12	Odor nuisance impacts from the wastewater treatment plant documented at complainant's residence in the 8200 block of State Route 20 in Anacortes. Penalty paid $9,000.
3988	10/8/12	10/16/12	Odor nuisance impacts from the wastewater treatment plant were documented at the complainant's residence in the 1300 block of N Avenue, Anacortes. Penalty paid $10,000.
3992	6/13/12	10/24/12	Incorrect isolation of safety system instrumentation during maintenance resulted in exceedance of the 500 ppmvd CO corrected to 7% oxygen, 1-hour average at the FCCU/CO Boilers(HPV). Excess emissions from this event are estimated at 162 pounds CO. Penalty paid $5,000.
3997	10/18/12	10/22/12	Odor nuisance impacts from the wastewater treatment plant were documented at the complainant's place of work in the 2900 block of Commercial Avenue, Anacortes. Penalty paid $10,000.
4004	12/13/12	12/18/12	Odor nuisance impacts from the wastewater treatment plant were documented at the complainant's residence in the 1100 block of 20th Street, Anacortes. Penalty paid $15,000.

PSR took possession of March Point Cogeneration Company (MPCC) on February 1, 2010. However, MPCC was not issued any NOVs between January 2008 and February 1, 2010. NOV 3791b was originally issued to MPCC but was reissued to PSR and, as such, is included in the above table.

1.5 Periodic Reports

PSR has periodic reporting requirements contained in various orders and regulations. Reported elements provide a valuable tool indicating the refinery's compliance status with regard to an applicable emission limit or operational limit. In addition to these periodic reports the refinery has specific action-based notifications and on-site recordkeeping requirements. Note that, similar to all recordkeeping, the data supporting the reported information must be maintained for at least five years from its date of generation.

Generally, reports are due 30 days after the close of the period that the reports cover. Also, the reporting periods are on a calendar basis: monthly reports shall cover a calendar month, quarterly reports shall cover a calendar quarter, six-month reports shall cover January through June and July through December, and annual reports shall cover a calendar year.

Monthly Reports: The monthly reports include a wide range of data collected during the month that are required to be submitted monthly by various permits, orders and regulations. A large part of the monthly report comprises continuous emission monitoring system (CEMS) performance data which provides information about the duration and nature of CEMS downtime, changes made to the CEMS, total operating time and dates of CEMS audits or certifications. Another significant element of monthly reports is the disclosure of deviations from required monitoring and from exceeding an enforceable emission limit.

Quarterly and Semiannual Reports: The refinery is required to submit quarterly reports under 40 CFR 61 Subpart FF certifying that the company met all applicable Subpart FF requirements. These include, but are not limited to, instrument monitoring for activated carbon bed breakthrough and visual inspections of oily wastewater seals.

The refinery is required to submit semiannual reports under 40 CFR 63 Subpart CC which should address any compliance exceptions to the requirements of the rule including, but not limited to: delay of repair of storage tanks, failure of any pilot light on a flare, and leak detection and repair monitoring summaries. In addition, 40 CFR 60 Subpart QQQ requires semiannual reports to

report the date and type of defect found in the Individual Drain Systems along with the corrective action taken.

The leak detection and repair (LDAR) program also requires a semiannual report that summarizes the number of leaking components found and the number not repaired in a timely manner, an explanation as to the reason for the delay of repair, any process unit shutdowns, and any revisions to the program since the initial report.

Annual Reports: 40 CFR 61 Subpart FF requires an annual report that summarizes the total annual benzene quantity from facility waste, identifies each waste stream and whether or not the waste stream will be controlled for benzene, and, for uncontrolled streams, lists parameters describing the uncontrolled streams along with the annual benzene quantity for each.

Additionally, the refinery is required to submit an annual report under 40 CFR 61 Subpart FF that includes the results of opening seal inspections where a defect was found.

Compliance Certifications: All required monitoring reports must be certified by a responsible official of the truth, accuracy, and completeness of the reports. Where an applicable requirement requires reporting more frequently than once every six months, the responsible official's certification need only to be submitted in a semiannual report that specifically identifies all documents subject to the certification.

Also, the refinery is required to submit an annual compliance certification that lists each term of the permit, the compliance status, whether the compliance was continuous or intermittent, and the methods used for determining the compliance status.

1.6 Annual Emission Inventory

Each year all major sources are required to submit an air pollution emissions inventory upon request of the NWCAA. This report includes criteria air pollutants, hazardous air pollutants (HAP), and greenhouse gas (GHG) emissions. Note that reporting GHG emissions was optional until 2010; in 2010, GHG emissions were required to be submitted to EPA. The NWCAA publishes an emissions inventory report each year that includes emissions summaries for all of the large industrial facilities located within Whatcom, Skagit and Island counties; emissions from MPCC and Shell PSR are also included.

Table 1-3 summarizes the last five years of available emissions data for Shell PSR. In general, emission rates at the refinery vary from year to year depending on the slate of crude oils used as a feedstock, the types and amounts of products produced, modifications to process equipment and/or emission control devices, and to some extent improvements in the methods used to calculate emissions.

Table 1-3: Annual Actual Emissions from Shell PSR

Pollutant	Calendar Years Emissions (tons)				
	2008	2009	2010	2011	2012
PM_{10}	246	222	230	234	228
SO_2	449	370	326	369	445
NOx	1,325	1,156	1,078	1,101	1,319
VOC	391	410	346	429	587
CO	525	536	510	485	494
HAP	11.1	8.6	6.5	6.8	10.3
GHG (CO_2e)	Not submitted	1,418,202	2,256,666	2,298,542	2,319,913

Table 1-4 summarizes the emissions from March Point Cogeneration Company (MPCC) for the last five years. Note that PSR took possession of MPCC in 2010; as such, 2009 is the last year where emissions from MPCC were reported separately. The Cogen emissions were included in the PSR emission inventory for 2010 (partially), 2011 and 2012.

Table 1-4: Annual Actual Emissions from MPCC

Pollutant	Calendar Years Emissions (tons)				
	2008	2009	2010	2011	2012
PM_{10}	6	6	6	*	*
SO_2	21	18	19	*	*
NOx	249	233	254	*	*
VOC	19	19	29	*	*
CO	69	69	54	*	*
HAP	0.3	0.3	0.3	*	*
GHG (CO_2e)	Not submitted	Not submitted	274,824	*	*

*Included in PSR's emission inventory

2. GENERAL REGULATORY REQUIREMENTS

This portion of the Statement of Basis discusses a wide range of regulatory programs that potentially apply to the refinery including federal (e.g., NSPS, NESHAP, CAM) and state regulations. For those programs that apply, general applicability is discussed, along with the overall compliance method. For unit-specific details, see the individual process unit under SOB Section 3.

On August 20, 2001, Equilon Enterprises LLC dba Shell Oil Products US (i.e., Shell) entered into consent decrees applicable to PSR in the following cases:

United States, et al. v. Equilon Enterprises LLC, et al.
United States District Court for the Southern District of Texas
Civil Action No. H-01-0978
(Referred to in the SOB as the Heater and Boiler Consent Decree)
Terminated on August 1, 2013

United States, et al. v. Equilon Enterprises LLC
United States District Court for the Southern District of Texas
Civil Action No. H-01-0978
(Referred to in the SOB as the Equilon Consent Decree)

These Consent Decrees were issued to Equilon Enterprises LLC based on alleged violations of the federal Prevention of Significant Deterioration (PSD) program, major New Source Review (NSR), New Source Performance Standards (NSPS) 40 CFR 60 Subpart J, National Emission Standards for Hazardous Air Pollutants (NESHAP) 40 CFR 61 Subpart FF, and Leak Detection and Repair (LDAR) 40 CFR 60 and 63 at various Shell-owned facilities across the country, including PSR. The Consent Decrees include a compliance schedule with certain compliance obligations applicable to PSR.

The Consent Decrees include air pollution control measures such as, but not limited to, applying NSPS Subpart J standards to all refinery fuel gas combustion units and flares, installation of a wet gas scrubber on the FCCU, and retrofitting a number of combustion devices with ultra-low NO_X burners.

Each Consent Decree includes the ability for the company to terminate the Consent Decree once the requirements are satisfied, including payment of all penalties, installation of required control equipment, the receipt of all mandated permits, and operation for at least one year in compliance with Consent Decree emission limits. To ensure that certain Consent Decree requirements are federally enforceable after the Consent Decree "sunsets", pursuant to the Consent Decree, the NWCAA has issued orders of approval to construct or compliance orders for these requirements. These NWCAA-issued orders have been incorporated into the AOP as specific requirements. Note that the Heater and Boiler Consent Decree was terminated on August 1, 2013.

A Consent Decree settlement is independently enforceable by the parties to the Decree. As such, the Consent Decree document stands as a separate document from the AOP. The Consent Decree compliance obligations are not considered "applicable requirements" under the federal Title V definition; they are not included in the AOP. The original Consent Decrees can be found with the AOP and SOB on the NWCAA website at www.nwcleanair.org. The Consent Decrees along with all addenda are provided in their entirety on the EPA website at http://cfpub.epa.gov/compliance/cases/.

2.1 New Source Performance Standards

NSPS regulations are directly applicable based on the date an affected unit was constructed, reconstructed, or modified. When an NSPS applies to a facility, the General Provisions of 40 CFR 60 Subpart A also apply. Some of the requirements of Subpart A are included in AOP Section 3, and some are not. Generally, if a Subpart A requirement is applicable when triggered by a

particular action it is included in the AOP. If the Subpart A term is not a specific requirement for the facility, it is not included in the AOP. If the requirement was something that was a one-time requirement that has been completed, it is not in the AOP.

The following subsections discuss the applicability of individual NSPS Subparts to PSR.

2.1.1 40 CFR 60 Subparts D, Da, and Db - Standards of Performance for Steam Generating Units

40 CFR 60 Subparts D, Da, and Db apply to fossil-fuel-fired steam generating units of a specified size and construction date. The Erie City Boiler is a fossil-fuel-fired steam generating unit. However, it was constructed prior to August 17, 1971 (i.e., 1958) and has not been modified since; as such, it is not subject to 40 CFR 60 Subparts D, Da, or Db.

Gas turbines are not affected sources under Subparts D, Da, or Db; however, the duct burners in cogeneration units are potentially subject. The Cogens are equipped with supplemental firing burners located in the ducting at the beginning of the heat recovery steam generators (HRSGs). Each duct burner is rated at 163 MMBtu/hour, is capable of burning natural and/or refinery fuel gas, and was constructed in 1990/1991. As such, the duct burners are subject to 40 CFR 60 Subpart Db.

As discussed in the following section, the duct burners are also subject to 40 CFR 60 Subpart J. As such, pursuant to Subpart Db (60.40b(c)), the duct burners are subject to the PM and NO_X standards under NSPS Subpart Db and the SO_2 standards under NSPS Subpart J. However, because the burners do not burn coal, oil, wood, or municipal-type solid waste, in any quantity, they are not subject to the PM standards in NSPS Subpart Db. Additional discussion of specific 40 CFR 60 Subpart Db applicability to the duct burners can be found in SOB Section 3.9.2.

2.1.2 40 CFR 60 Subpart J and Subpart Ja – Standards of Performance for Petroleum Refineries

40 CFR 60 Subpart J applies to fluid catalytic cracking unit (FCCU) catalyst regenerators, fuel gas combustion devices, and Claus sulfur recovery plants greater than 20 long tons per day generally constructed, modified, or reconstructed after June 11, 1973 and on or before May 14, 2007. 40 CFR 60 Subpart Ja applies to FCCUs, fluid coking units (FCU), delayed coking units (DCU), fuel gas combustion devices, flares, and sulfur recovery plants generally constructed, modified, or reconstructed after May 14, 2007.

As can be seen in Table 2-1, fourteen of the refinery fuel gas combustion devices (e.g., heaters and boilers) were constructed, reconstructed, or modified within the appropriate date range and triggered NSPS Subpart J. The Heater and Boiler Consent Decree mandated that all heaters and boilers are affected sources under NSPS Subpart J; the requirement of which was memorialized in NWCAA Compliance Order (CO) 07. Therefore, the other nine units that have not yet been reconstructed or modified to trigger NSPS Subpart J are now affected sources and must comply with NSPS Subpart J. The only unit that has triggered NSPS Subpart Ja applicability is the flares which is discussed below.

Table 2-1 : Subpart J Regulatory Applicability for Combustion Devices

Combustion Device	Subpart J	CO 07
Gas Oil Tower Heater (1A-F4)		X
Atmospheric Charge Heater (1A-F5)		X
Atmospheric Charge Heater (1A-F6)		X
Vacuum Charge Heater (1A-F8)	X	
Charge Heater (15F-100)	X	
CO Boiler (COB-1)	X	
CO Boiler (COB-2)	X	
Charge Heater (6D-F2)	X	
Interheater #1 (6D-F3)	X	
Interheater #2 (6D-F4)	X	
Charge Heater (10H-101)		X
Interheater #1 (10H-102)		X
Interheater #2 (10H-103)		X
Stabilizer Reboiler (10H-104)		X
Charge Heater (7C-F4)	X	
Fractionator Reboiler (7C-F5)	X	
Charge Heater (11H-101)		X
H2S Stripper Reboiler (11H-102)	X	
Fractionator Reboiler (11H-103)	X	
CDHDS Heater (60-F201)	X	
Erie City Boiler 1 (31GF1)		X
Truck Rack Vapor Combustor (23NF1)	X	
Duct Burners for Cogens 1, 2, & 3	X	

PSR generally complies with NSPS Subpart J requirements by monitoring the sulfur content at the main fuel gas mix drum which feeds most of the combustion units in the refinery.

NSPS Subpart J requires that the concentration of hydrogen sulfide (H_2S) in refinery fuel gas burned in affected fuel gas combustion devices not exceed 230 mg/dscf (dry standard cubic feet), based on a 3-hour average, with standard conditions defined in 40 CFR 60 Subpart A as a 293 Kelvin and 101.3 kilopascals. Because H_2S is continuously monitored as ppmvd, the NSPS Subpart J standard of 230 mg/dscm has been converted to ppm and the ppm limit included in applicable AOP term.

$$\frac{230\ mg\ H_2S}{dscm\ air} \times \frac{1\ g\ H_2S}{1{,}000\ mg\ H_2S} \times \frac{1\ mol\ H_2S}{34.082\ g\ H_2S} \times \frac{24.056\ L\ H_2S}{mol\ H_2S\ (ideal\ gas\ law)} \times \frac{1\ dscm\ H_2S}{1{,}000\ L\ H_2S}$$

$$= \frac{162\ dscm\ H_2S}{1{,}000{,}000\ dscm\ air} = 162\ ppmvd\ H_2S\ in\ air$$

However, the heaters associated with the HTU1/CRU1, HTU2, and HTU3 units are primarily fired with fuel gas generated within each respective process unit. As such, monitoring the sulfur content at the main fuel gas drum for these heaters is not representative and the sulfur content for the fuel gas for the heaters associated with these units must be monitored independently. For HTU1/CRU1 (i.e., 7C-F4/F5), the SO_2 is monitored as it comes out of the heater stack. Because heaters 6D-F2, 6D-F3, and 6D-F4 utilize the same fuel gas, these three heaters rely on the 7C-F4/F5 CEMS for compliance. For HTU2 (i.e., 11H-101, 11H-102, and 11H-103) and HTU3 (i.e., 60F-201), the H_2S content of the fuel gas is monitored at each respective fuel gas

drum. Additional discussion of NSPS Subpart J applicability and permitting history can be found in SOB Section 3.

The refinery operates two sulfur recovery units (SRUs) – Unit 3 constructed in 1999 and Unit 4 constructed in 2003 – both subject to NSPS Subpart J requirements. NSPS Subpart J limits SO_2 emissions from the Incinerator stacks to 250 ppmvd at 0% oxygen on a 12-hour rolling average basis. Compliance with this standard is demonstrated using a continuous emissions monitoring system (CEMS) for SO_2 as required by the rule. Also, because the SRUs use refinery fuel gas as a supplemental fuel, the SRUs also qualify as fuel gas combustion devices under NSPS Subpart J.

In 1998, the fluidized catalytic cracking unit (FCCU) was modified in the Vertical Riser Project, which triggered NSPS Subpart J for carbon monoxide (CO), particulate matter, and opacity (the NWCAA issued OAC 623). Because there was no increase in SO_2 emissions, NSPS Subpart J was not triggered for SO_2. The Equilon Consent Decree mandated that the FCCU is an affected source for all pollutants under NSPS Subpart J; the requirement of which was memorialized in NWCAA Compliance Order (CO) 10. Note also that the CO Boilers are listed in Table 2-1; the CO Boilers use refinery fuel gas as supplemental fuel which qualifies them as fuel gas combustion devices under NSPS Subpart J.

PSR operates three flares (east, north, and south); because they combust refinery-generated gases, they are potentially fuel gas combustion devices under NSPS Subpart J. The Equilon Consent Decree required PSR submit a Hydrocarbon Flaring Study to EPA which proposed ways to reduce the number and size of flaring events. The Equilon Consent Decree mandated that the proposed flaring reduction solution in the Hydrocarbon Flaring Study (i.e., flare gas recovery) be implemented by December 31, 2006. The flare gas recovery system was permitted under OAC 918 and was operating as of June 27, 2006.

As a result of the Hydrocarbon Flaring Study, Shell submitted a determination request in 2006 for two flare projects as to whether either triggered NSPS Subpart J. EPA determined that the project in 1983 when PSR added three vent streams from the Delayed Coker Unit to the common flare header triggered NSPS Subpart J. Shell accepted NSPS Subpart J applicability to the three flares and committed to demonstrating compliance using a flare gas recovery system by December 31, 2012.

On December 22, 2008, the Federal Register published a notice of a stay to provisions of 40 CFR 60 Subpart Ja relating to the definition of flares, modifications to flares, and the NO_X limit for combustion devices. On September 12, 2012, EPA published a Federal Register notice that lifted the stay and amended certain provisions of Subpart Ja that were included in the stay. With the lifting of the stay and the modification definition for flares under 60.100a(c), PSR triggered NSPS Subpart Ja with the connection to the existing flare system in the Benzene Reduction Unit, which started up on April 5, 2011 (permitted under OAC 1045).

Flares under NSPS Subpart Ja are considered independent affected sources rather than fuel gas combustion devices. Flares are required to meet the 162 ppm H_2S limit for gases that are being flared unless the gases are a result of leaking relief valves or from an emergency malfunction event. The NSPS Subpart J and Subpart Ja 162 ppmv limits are essentially equivalent.

The rule also requires that the refinery: develop and implement a flare management plan and conduct root cause analyses and take corrective action when waste gas sent to the flare exceeds a flow rate of 500,000 standard cubic feet per day (scfd) above the baseline flow in a 24-hour period, or contains sulfur that, upon combustion, will emit more than 500 pounds of SO_2 in a 24-hour period.

NSPS Subpart Ja generally allows three years from the date of promulgation (i.e., a compliance date of November 11, 2015) to demonstrate compliance with new requirements, such as the flare management plan or conducting root cause analyses. However, as flares that were subject to NSPS Subpart J that subsequently triggered NSPS Subpart Ja, the PSR flares are currently subject to the 162 ppmv H_2S on a 3-hour rolling basis limit under NSPS Subpart Ja (compliance date as of November 13, 2012) rather than the requirement under NSPS Subpart J.

2.1.3 40 CFR 60 Subparts K, Ka and Kb - Standards of Performance for Volatile Organic Liquid Storage Vessels

The following New Source Performance Standards apply to tanks (i.e., vessels) storing organic liquids at the refinery depending on the date the tank was constructed, reconstructed or modified:

- 40 CFR 60 Subpart K - Standards of Performance for Storage Vessels for Petroleum Liquids for Which Construction, Reconstruction, or Modification Commenced After June 11, 1973, and Prior to May 19, 1978
- 40 CFR 60 Subpart Ka - Standards of Performance for Storage Vessels for Petroleum Liquids for Which Construction, Reconstruction, or Modification Commenced After May 18, 1978, and Prior to July 23, 1984
- 40 CFR 60 Subpart Kb - Standards of Performance for Volatile Organic Liquid Storage Vessels (Including Petroleum Liquid Storage Vessels) for Which Construction, Reconstruction, or Modification Commenced after July 23, 1984

Further discussion of storage tanks at the refinery and their applicable requirements can be found in SOB Section 3.14.

2.1.4 40 CFR 60 Subpart GG - Standards of Performance for Stationary Gas Turbines

NSPS Subpart GG applies to stationary gas turbines with a peak load heat input of 10 MMBtu/hr or greater (LHV) constructed, modified, or reconstructed after October 3, 1977. The Cogens each have a heat input rating of 450 MMBtu/hr and were constructed in 1990/1991. As such, they are subject to NSPS Subpart GG. Additional discussion of NSPS Subpart GG applicability to the Cogens can be found in SOB Section 3.9.2.

2.1.5 40 CFR 60 Subparts VV and VVa - Standards of Performance for Equipment Leaks of VOC in the Synthetic Organic Chemicals Manufacturing Industry

40 CFR 60 Subpart VV applies to equipment leaks of VOC in the Synthetic Organic Chemicals Manufacturing Industry (SOCMI) units constructed, modified, or reconstructed after January 5, 1981 and on or before November 7, 2006. 40 CFR 60 Subpart VVa applies to equipment leaks of VOC in the SOCMI units constructed, modified, or reconstructed after November 7, 2006.

While Subparts VV and VVa do not specifically apply to petroleum refineries, other refinery-specific equipment leak subparts reference Subparts VV and VVa for the compliance demonstration. See SOB Section 2.2.14 for a further discussion of PSR LDAR requirements.

Note, however, that SOCMI units, for the purposes of Subpart VV, are those that produce, as intermediates or final products, one or more of the chemicals listed in 40 CFR 60.489, including nonene. As such, the Nonene Unit qualifies as a SOCMI unit for the purposes of NSPS and is directly subject to Subpart VV. Pursuant to 40 CFR 60 Subparts GGG and GGGa, those units subject to VV are excluded from Subparts GGG and GGGa.

2.1.6 40 CFR 60 Subpart XX - Standards of Performance for Bulk Gasoline Terminals

NSPS Subpart XX applies to Bulk Gasoline Terminals constructed or modified after December 17, 1980. The gasoline loading rack at the refinery was modified in 1993 and triggered NSPS Subpart XX. However, it is also an affected source under the Refinery MACT 1 (i.e., 40 CFR 63 Subpart CC); therefore, according to the overlap provisions under Subpart CC (40 CFR 63.640(r)), those loading terminals that are subject to both NSPS Subpart XX and Refinery MACT 1 need only comply with the Refinery MACT 1 requirements.

2.1.7 40 CFR 60 Subparts GGG and GGGa - Standards of Performance for Equipment Leaks of VOC in Petroleum Refineries

The refinery has constructed, modified, or reconstructed various process units, triggering the applicability of either 40 CFR 60 Subpart GGG, or the more recent Subpart GGGa. Subpart GGG applies to process units with equipment components in VOC service that have been constructed, reconstructed, or modified between January 4, 1983, and November 7, 2006. Whereas Subpart GGGa applies to process units with equipment components in VOC service that have been constructed, reconstructed, or modified on or after November 7, 2006. The rules provide an applicability exception under 60.590a(d): those process units subject to Subpart GGG and modified after November 7, 2006, remain subject only to Subpart GGG.

Subpart GGG and Subpart GGGa rely on the leak detection and repair (LDAR) standards of 40 CFR 60 Subpart VV and Subpart VVa, respectively. In general, these LDAR standards are considered work practice standards that require that the refinery use an instrument to find leaking components such as valves and pumps, and to repair them in a timely manner.

Subparts VV and VVa standards specify monitoring and recordkeeping requirements associated with leaks from various process equipment including compressors, pumps in light liquid service, pressure relief devices in gas/vapor service, sampling connections, open-ended valves and lines, valves in gas/vapor and light liquid service, pumps and valves in heavy liquid service, pressure relief devices in heavy liquid and light liquid service, flanges, and other connections. Note that under Subpart VVa, the standards applicable to connectors in gas/vapor service and light liquid service (40 CFR 60.482-11a) were stayed on June 2, 2008 (73 FR 31376). Instrument monitoring is conducted using EPA Method 21 at a frequency that is specified for each type of process equipment affected by the rule.

If a leak is measured in accordance with EPA Method 21, a first attempt at repair is required within 5 days and the repair must be complete within 15 days, unless a delay of a repair is exercised. If a delay of repair in exercised, the repair must be technically infeasible within the 15-day repair period, or because the repair would potentially increase the size of the leak. In many circumstances, delays can be allowed until the affected process unit is shut down for maintenance.

Several other regulations also impose LDAR requirements at the refinery beyond Subparts GGG and GGGa. See SOB Section 2.2.14 for a discussion of regulation overlap and applicability.

2.1.8 40 CFR 60 Subpart NNN - Standards of Performance for VOC Emissions From Synthetic Organic Chemical Manufacturing Industry (SOCMI) Distillation Operations

40 CFR 60 Subpart NNN applies to distillation operations at Synthetic Organic Chemical Manufacturing Industry (SOCMI) units. Nonene is a listed SOCMI chemical under Subpart NNN and the Nonene Unit utilizes distillation to separate out the C9 material; as such, the Nonene Unit is potentially subject to Subpart NNN.

However, the Nonene Unit does not discharge its vent streams to the atmosphere directly or indirectly – the nonene product stream is routed to final product tankage and the remaining

hydrocarbon stream (still referred to as POLY gasoline) is routed to tankage for gasoline blending. As such, 40 CFR 60 Subpart NNN does not apply.

2.1.9 40 CFR 60 Subpart QQQ - Standards of Performance for VOC Emissions from Petroleum Refinery Wastewater Systems

40 CFR 60 Subpart QQQ applies to individual drain systems, oil-water separators, and aggregate facilities in refinery wastewater systems that were constructed, modified, or reconstructed after May 4, 1987. The refinery has added or modified individual drain systems at a number of process units after May 4, 1987, thereby triggering applicability of NSPS Subpart QQQ at those affected units. The following units have triggered NSPS Subpart QQQ for process drains at the refinery: the Delayed Coking Unit (DCU), the Fluidized Catalytic Cracking Unit (FCCU), the Nonene Unit, Hydrotreating Unit 2 (HTU2), Hydrotreating Unit 3 (HTU3), the Isomerization (ISOM) Unit, Benzene Reduction Unit (BRU), the Diesel Railcar Loading Rack, the Nonene Truck and Railcar Loading Rack, and Flare Gas Recovery (FGR).

There is significant overlap between equipment subject to 40 CFR 60 Subpart QQQ and 40 CFR 63 Subpart CC. As such, EPA created overlap provisions to clarify compliance requirements. Under the Refinery MACT 1 overlap provisions of 40 CFR 63 Subpart CC 63.640(o), any Group 1 wastewater stream managed in a piece of equipment that is also subject to 40 CFR 60 Subpart QQQ is required to comply only with the requirements the 40 CFR 63 Subpart CC, which references the NESHAP for Benzene Waste Operations under 40 CFR 61 Subpart FF. Under 40 CFR 63 Subpart CC, a "Group 1 wastewater stream" is defined as:

> *a wastewater stream at a petroleum refinery with a total annual benzene (TAB) loading of 10 megagrams per year or greater, as calculated according to the procedures in 40 CFR 61.342 of subpart FF of part 61, that has a flow rate of 0.02 liters per minute or greater, a benzene concentration of 10 parts per million by weight or greater, and is not exempt from control requirements under the provisions of 40 CFR part 61, subpart FF.*

Under 40 CFR 63 Subpart CC, a "Group 2 wastewater stream" is defined as:

> *a wastewater stream that does not meet the definition of Group 1 wastewater stream.*

For those units subject to 40 CFR 60 Subpart QQQ, the requirements for individual drain systems under 40 CFR 60 Subpart QQQ are listed in AOP Section 6.4. However, the AOP also includes language to allow for the overlap provisions under 40 CFR 63 Subpart CC if and when it applies as well. Wastewater stream compliance with Subpart CC for all process units throughout the refinery is addressed under the Individual Drain Systems in the Effluent Plant and Sewer System in AOP Section 5.13.

Similarly, the Dissolved Air Floatation (DAF) Unit 3 constructed in 1994 under OAC 514 is an affected oil-water separator subject to NSPS Subpart QQQ. However, DAF3 manages a Group 1 wastewater stream subject to 40 CFR 63 Subpart CC; as such, pursuant to the overlap provisions in Subpart CC (63.640(o)(1)), the DAF3 only is required to comply with 40 CFR 63 Subpart CC.

2.1.10 40 CFR 60 Subpart IIII - Standards of Performance for Stationary Compression Ignition Internal Combustion Engines

40 CFR 60 Subpart IIII applies to stationary compression ignition internal combustion engines (ICE) that commenced construction after July 11, 2005 and were manufactured after, for engines that are not fire pump engines, April 1, 2006 and, for fire pump engines, July 1, 2006. All refinery internal combustion engines burn diesel fuel and rely on the heat of compression for ignition but three engines, the Main Control Room Emergency Generator, the Radio Tower Emergency Generator, and the EP Outfall Pump Engine were constructed after July 11, 2005 and manufactured after April 1, 2006. As such, the Main Control Room Emergency Generator, the

Radio Tower Emergency Generator, and the EP Outfall Pump Engine are subject to 40 CFR 60 Subpart IIII.

Generally, 40 CFR 60 Subpart IIII requires that the engines meet specified EPA Tier emissions standards and burn only ultralow sulfur diesel with a sulfur content equal to or less than 15 ppmw.

Stationary Compression Ignition ICE Emergency Service

40 CFR 60 Subpart IIII specifically describes what it means to be in emergency service. Pursuant to 40 CFR 60.4211(f), to be considered an emergency stationary ICE, the engine must meet the following operational requirements:

- There is no time limit on the use of emergency stationary ICE in emergency situations.
- The emergency stationary ICE may be operated for a maximum of 100 hours per calendar year for the purposes of maintenance checks, readiness testing, emergency demand response, and voltage or frequency deviation support. Any operation for non-emergency situations as allowed described in the next bullet counts as part of the 100 hours per calendar year.
- The emergency stationary ICE may be operated for an additional 50 hours per year in non-emergency situations. The 50 hours of operation in non-emergency situations are counted as part of the 100 hours per calendar year for maintenance and testing and emergency demand response. Except for under specific circumstances, the 50 hours per year for non-emergency situations cannot be used for peak shaving or to generate income for a facility to supply power to an electric grid or otherwise supply power as part of a financial arrangement with another entity.

Any operation other than emergency operation, maintenance and testing, emergency demand response, and operation in non-emergency situations for 50 hours per year, as described above is prohibited. If the engine is not operated according to these requirements, the engine will not be considered an emergency engine and will need to meet all the requirements for non-emergency engines.

Also, none of the refinery emergency generators are used or are contractually obligated to be available for more than 15 hours per calendar year for emergency demand response as described in 63.6640(f)(2)(ii) or voltage or frequency deviations of 5 percent or greater below standard voltage or frequency (63.6640(f)(2)(iii)). Should PSR choose to use the engines for either of these purposes, additional requirements will become applicable.

Each stationary internal combustion engine at the refinery is also subject to 40 CFR 63 Subpart ZZZZ - National Emission Standards for Hazardous Air Pollutants: Reciprocating Internal Combustion Engines. See SOB Section 2.2.11 for further discussion.

2.1.11 40 CFR 60 Subpart JJJJ - Standards of Performance for Stationary Spark Ignition Internal Combustion Engines

40 CFR 60 Subpart JJJJ applies to stationary spark ignition internal combustion engines that commenced construction after the specified dates and were manufactured after the specified dates. All refinery internal combustion engines burn diesel fuel and rely on the heat of compression for ignition; therefore, no refinery engines are subject to 40 CFR 60 Subpart JJJJ.

2.2 National Emission Standards for Hazardous Air Pollutants (NESHAP/MACT)

As a major source of Hazardous Air Pollutants (HAPs), PSR owns and operates specific affected equipment regulated under the following NESHAP/MACT Subparts. When a NESHAP applies to a facility, the General Provisions of the associated 40 CFR 61 or 63 Subpart A also apply. Some of the requirements of Subpart A are included in the AOP and some are not. Generally, if a

Subpart A requirement is applicable when triggered by a particular action it is found in AOP Section 3. Conversely, if a part of Subpart A does not have specific requirement for the facility, it is not included in the AOP. If the requirement was something in the past that was a one-time requirement that has been completed, it is also not in the AOP.

2.2.1 40 CFR 61 Subpart J - National Emission Standard for Equipment Leaks (Fugitive Emission Sources) of Benzene

40 CFR 61 Subpart J applies to fugitive emission sources (i.e., pumps, compressors, pressure relief devices, sampling connection systems, open-ended valves or lines, valves, connectors, surge control vessels, bottoms receivers, and control devices or systems) in benzene service. In benzene service is defined as contacting a fluid, either gaseous or liquid, that is at least 10 percent benzene by weight.

The highest benzene content stream in the refinery is the feed into the ISOM Unit (i.e., into the BenSat Unit) at 5.5 wt% benzene. The next highest concentrations are in the CRU2 light and heavy platformate streams and the HTU3 light and heavy naphtha streams (HTU3 feed is from the FCCU). As such, no streams at the refinery are subject to 40 CFR 61 Subpart J.

2.2.2 40 CFR 61 Subpart FF - National Emission Standard for Benzene Waste Operations

40 CFR 61 Subpart FF applies to the treatment, storage, and disposal of benzene-containing hazardous waste at petroleum refineries. Subpart FF contains control requirements, limits, and work practice standards for equipment that handles and treats benzene-containing waste (e.g. tanks, individual drain systems, containers). In 1991, the refinery was required to come into compliance with 40 CFR 61 Subpart FF. The purpose of this regulation was to reduce the amount of benzene emissions to the atmosphere from wastewater operations.

Pursuant to 40 CFR 61.342, PSR conducts an annual total annual benzene (TAB) analysis which identifies the total annual quality of benzene contained in refinery wastewater for both the controlled and uncontrolled streams. The refinery has determined that the TAB is greater than 10 Mg/yr. The TAB does not represent the level of benzene emissions to the atmosphere from waste operations, but rather the total amount of benzene that enters the wastewater collection system.

PSR is complying with the BQ6 alternative under 40 CFR 61.342(e). This option means that the uncontrolled streams at the refinery must not exceed 6 Mg of benzene during the calendar year as demonstrated in the annual TAB/BQ6 analysis. Note that the uncontrolled streams in the BQ6 analysis must include remediation wastes, wastes generated during process turnarounds, wastes shipped offsite, and all dilute streams except the stream that has less than 10 ppmw coming out of the wastewater treatment plant.

In AOP Section 1, the drains for certain individual process units are labelled as being subject to 40 CFR 61 Subpart FF. However, not all drains in that process unit are necessarily subject to or required to be controlled under Subpart FF. It is the refinery's responsibility to track applicability and control requirements for each drain.

2.2.3 40 CFR 61 Subpart BB – National Emission Standards for Hazardous Air Pollutants: Benzene Operations

40 CFR 61 Subpart BB applies to benzene distribution activities at the refinery. If the liquid loaded contains less than 70 wt% benzene, the refinery is only required to comply with the recordkeeping and reporting requirements of Subpart BB. The refinery has the potential to trigger Subpart BB during an event where the Isomerization (ISOM) Unit is shut down for an extended period and the refinery is in a position to ship out the benzene-rich Isomerization unit feedstock in lieu of processing. Note that the ISOM Unit feed stream is approximately only 5.5 wt% benzene. As such, should this occur, PSR is potentially subject to the recordkeeping and

reporting requirements under Subpart BB. However, the refinery does not anticipate a scenario where an extended Isomerization unit shutdown is likely. Therefore, these requirements are not listed in the AOP. However, in the unlikely event that PSR does ship the ISOM feed stream offsite, it will be subject to Subpart BB requirements.

2.2.4 40 CFR 63 Subparts F, G, and H – National Emission Standards for Hazardous Air Pollutants for the Synthetic Organic Chemical Manufacturing Industry

40 CFR 63 Subparts F, G, and H apply to organic hazardous air pollutants (HAPs) emissions from the manufacture of specified organic chemicals in the Synthetic Organic Chemical Manufacturing Industry (SOCMI). The Nonene Unit is a SOCMI unit for the purposes of NSPS – nonene is a listed chemical. However, nonene is not a listed SOCMI chemical under MACT. As such, the nonene unit is not subject to the SOCMI requirements under MACT.

2.2.5 40 CFR 63 Subpart Q – National Emission Standards for Hazardous Air Pollutants for Industrial Process Cooling Towers

40 CFR 63 Subpart Q applies to industrial process cooling towers at major HAP sources that use chromium-based water treatment chemicals as of the proposal date (August 12, 1993). Because neither the refinery cooling towers nor the cooling towers associated with the Cogen units used chromium-based treatment chemicals as of August 12, 1993, none of the cooling towers at the refinery are considered affected sources under 40 CFR 63 Subpart Q and, hence, are not subject.

2.2.6 40 CFR 63 Subpart Y - National Emission Standards for Marine Tank Vessel Loading Operations

40 CFR 63 Subpart Y applies to marine tank vessel loading operations that are major sources of HAP. However, existing offshore loading terminals (i.e., a location that has at least one loading berth that is 0.5 miles or more from the shore that is used for mooring a marine tank vessel and loading liquids from shore) are subject to Subpart Y but are exempt from the Subpart Y requirements except that they must meet the submerged fill requirements under 46 CFR 153.282. PSR's marine terminal is 0.5 miles from shore or more; therefore, it is subject only to the submerged fill requirements.

2.2.7 40 CFR 63 Subpart CC - National Emission Standards for Hazardous Air Pollutants From Petroleum Refineries

40 CFR 63 Subpart CC (commonly referred to as Refinery MACT 1) generally applies to fugitive HAP emission sources at the refinery. The process units at the refinery are subject to 40 CFR 63 Subpart CC if they have equipment containing or contacting one or more of the hazardous air pollutants listed in the NESHAP. The subject unit categories include:

- Miscellaneous process vents (MPVs)
- Storage vessels
- Wastewater streams and treatment operations
- Gasoline loading racks
- Marine tank vessel loading
- Equipment leaks from petroleum refining process units
- Heat exchanger systems

There are some equipment exemptions listed in the Refinery MACT 1, including catalytic cracking unit and catalytic reformer catalyst regeneration unit vents, as well as sulfur plant

vents and emission points routed to a fuel gas system. Other than the emission points routed to a fuel gas system, this equipment is included in Part 63 Subpart UUU, which is commonly referred to as Phase II MACT or Refinery MACT 2.

40 CFR 63 Subpart CC requires that HAP emissions be controlled from various emission points with the refinery. Some of these emissions points may also be subject to other existing regulations including NSPS and other NESHAPs. One of the intents of Subpart CC was to streamline all these applicable rules, allowing the source to comply with only the most stringent regulation which will demonstrate compliance with all applicable regulations.

Miscellaneous Process Vents: For Miscellaneous Process Vents (MPVs) there are no other existing regulations governing Group 1 and Group 2 categories. As a result, all Group 1 and Group 2 process vents must comply with the requirements of Subpart CC. Note that the HAP-content applicability threshold for MPVs is 20 ppm. PSR maintains the following Group 1 MPVs:

- VPS - Desalter Waterwash Surge Drum Vent (1A-C46)
- DCU - Coker Fractionator Overhead Accumulator Vent (15-C4)
- FCCU - Separator Bottoms Drum Vent (4B-C35)
- FCCU - 1st Stage Compressor in-line Separator Vent (4B-C102)
- POLY – Flare Knockout Drum Vent (5J-C56)
- POLY – Flare Knockout Drum Vent (5J-C85)
- CRU1 - Feed Surge Drum Vent (6D-C8)
- CRU2 - Feed Surge Drum Vent (10F-104)
- CRU2 - Platformate Splitter Receiver Vent (10F-119)
- ALKY2 - Acid Vapor Caustic Scrubber Vent (12F-115)
- HTU2 - Fractionator Accumulator Vent (11F-209)

All PSR MPVs are routed to a flare that meets the 40 CFR 63 Subpart A requirements as the control method.

Storage Vessels: Regarding storage vessels at an existing source such as PSR, there is overlap of the 40 CFR 63 Subpart CC with 40 CFR 60 Subparts K, Ka, and Kb. For storage vessels subject to both Subpart CC (both Group 1 and 2) and Subpart Kb, the vessels must comply with Subpart Kb as modified in Subpart CC. For Subpart CC Group 1 storage vessels also subject to Subpart K or Ka, the vessel must comply with Subpart CC. For Subpart CC Group 2 vessels subject to the control requirements under Subpart K or Ka, they must comply with Subpart K or Ka, respectively. For Subpart CC Group 2 vessels subject to Subpart K or Ka but not the associated control requirements, they must comply with Subpart CC.

Note there are no streamlining provisions for the overlap of 40 CFR 61 Subpart FF and Subparts K, Ka, and Kb for storage tanks. However, 40 CFR 61 Subpart FF allows for an alternative standard, where the storage vessel may install either an internal or external floating roof as referenced in Subpart Kb.

Note that the definition of storage vessel in Subpart CC excludes wastewater storage tanks. Wastewater tanks are to be addressed under the wastewater provisions in Subpart CC. The Subpart CC wastewater provisions reference 40 CFR 61 Subpart FF requirements. Subpart FF requirements then reference certain sections in Subpart Kb.

AOP Tables 1.13.2 and 1.14 lists the storage tanks at the refinery and the applicable federal regulations. Further discussion of regulatory overlap and specific tank requirements are discussed in SOB Section 3.14.

Wastewater: There are several wastewater stream regulations that overlap or are cross referenced in 40 CFR 63 Subpart CC. These are 40 CFR 60 Subpart QQQ, 40 CFR 61 Subpart FF, and 40 CFR 63 Subpart G. For those Group 1 streams subject to both Subpart CC and Subpart QQQ, the stream is only required to comply with Subpart CC. Subpart CC Group 2 streams subject to Subpart QQQ must comply with both Subpart QQQ and Subpart CC. Wastewater stream compliance for all process units throughout the refinery is addressed under the Individual Drain Systems in the Effluent Plant and Sewer System in AOP Section 5.13.

Gasoline Loading Racks: For gasoline loading racks such as PSR's that are subject to 40 CFR 60 Subpart XX and Subpart CC, the rack is only required to comply with Subpart CC. Note that Subpart CC mandates that subject racks comply with various referenced sections of 40 CFR 63 Subpart R; Subpart R then references various sections of Subpart XX.

Marine Vessel Loading: Marine vessel loading operations are subject 40 CFR 63 Subpart CC if they are located at a major source of HAPs, have equipment that contains or contacts one or more of the listed HAPs, and meet the applicability criteria under Subpart Y (63.560). Because PSR's marine terminal is not subject to Subpart Y, it is not subject to Subpart CC as well.

Equipment Leaks: 40 CFR 63 Subpart CC applies to equipment leaks from petroleum refining process units located at major sources of HAPs that contain or contact one or more of the listed HAPs. Note that to be subject to the equipment leak requirements, the handled material must be at least 5 wt% of listed HAPs. Several other regulations also impose LDAR requirements at the refinery beyond Subpart CC. See SOB Section 2.2.14 for a discussion of regulation overlap and applicability.

Heat Exchangers: As part of addressing residual risk, EPA promulgated requirements addressing HAP emissions from heat exchanger leaks at refineries in 40 CFR 63 Subpart CC on June 30, 2010. The regulation includes monitoring requirements with leak definitions and repair scheduling obligations for both closed-loop and once-through systems. PSR only has closed-loop systems so the once-through requirements were not addressed in the AOP.

The subject heat exchangers must be "in organic HAP service" which is defined as having at least 5 wt% of listed HAPs. In addition, there are two exemptions: exchangers where the minimum pressure on the cooling water side is at least 35 kPa (~5.1 psia) greater than the maximum pressure on the process side and exchangers that employ an intervening cooling fluid that has less than 5 wt% HAP that is not sent to a cooling tower or discharged, which essentially isolates the cooling water from the process fluid. At this writing, the refinery has approximately 106 exchangers subject to Subpart CC and approximately 594 that are exempt. The subject heat exchangers are divided into two heat exchange systems, one for each refinery cooling tower. The cooling towers are monitored monthly with a leak action level of 6.2 ppmv.

2.2.8 40 CFR 63 Subpart UUU - National Emission Standards for Hazardous Air Pollutants for Petroleum Refineries: Catalytic Cracking Units, Catalytic Reforming Units, and Sulfur Recovery Units

40 CFR 63 Subpart UUU (commonly referred to as Refinery MACT 2) which became effective on April 11, 2005 contains continuing applicable requirements for the refinery's fluidized catalytic cracking units (FCCU) that are associated with regeneration of the catalyst used in the unit (i.e., the catalyst regeneration flue gas vent), catalytic reforming units (CRUs) (during depressuring operations, purging, coke burn, and catalyst rejuvenation), sulfur recovery units (SRUs), and bypass lines of any affected units. The refinery was required to provide an operation, maintenance and monitoring plan (OMMP) for the FCCU, the CRUs, and the SRUs and abide by the plans at all times during operation of these units.

Metal HAP emissions from the FCCU catalyst regenerator vent must meet either the NSPS Subpart J standards for particulate matter, if applicable, or one of four other options. Because PSR's FCCU is already subject to NSPS Subpart J, they are meeting the NSPS Subpart J requirements of 1.0 lb/1,000 lb of coke burn-off and the opacity must not exceed 30 percent

except for one 6-minute average opacity reading in any 1-hour period. Similarly, PSR's FCCU is complying with the NSPS Subpart J requirement of 500 ppmvd CO on a 1-hour average to limit organic HAP emissions.

Organic HAP emissions during depressuring and purging of the CRUs are to be controlled by purging the unit to a flare that meets the requirements under 40 CFR 63.11(b) and that flare visible emissions must not exceed a total of 5 minutes during any 2-hour operating period. In addition, inorganic HAP emissions as hydrogen chloride during coke burn-off and catalyst regeneration must be reduced to a concentration of 30 ppmvd corrected to 3 percent oxygen.

Subpart UUU requires that emissions at the Sulfur Recovery Complex meet the 40 CFR 60 Subpart J requirement of 250 ppmvd SO_2 at 0% oxygen, 12-hour rolling limit.

2.2.9 40 CFR 63 Subpart EEEE – National Emission Standards for Hazardous Air Pollutants: Organic Liquids Distribution (Non-Gasoline)

40 CFR 63 Subpart EEEE applies to non-gasoline organic liquid distribution (OLD) activities at the refinery. Organic liquid for the purposes of Subpart EEEE is defined as any non-crude oil liquid or liquid mixture that contains five percent by weight or greater of listed HAP. Organic liquids do not include gasoline (including aviation gasoline), kerosene, diesel, asphalt, heavier distillate oils, heavier fuel oils; any fuel dispensed directly to users; hazardous waste; wastewater; ballast water; or any non-crude oil with an annual average TVP less than 0.1 psia.

Under the 63.2338(c)(1) overlap provisions of Subpart EEEE, storage tanks, transfer racks, transport vehicles, containers, and equipment leak components that are part of an affected source under another 40 CFR part 63 NESHAP (MACT) are excluded from the Subpart EEEE-affected source. Therefore, process units subject to Subpart CC, such as the truck rack, are not subject to Subpart EEEE. However, other process units that handle and transfer non-gasoline organic liquids may be subject.

The diesel truck rack and railcar rack are not subject to another MACT. However, diesel is not considered an organic liquid under Subpart EEEE; therefore, the racks are not subject to Subpart EEEE.

The Nonene Unit and load rack are not subject to another MACT standard (the nonene storage tanks are subject to the Group 2 requirements under 40 CFR 63 Subpart CC). However, the HAP content of the handled material is not greater than 5% by weight. As such, it is not subject to Subpart EEEE.

The propane/butane loading rack is not subject to another MACT standard. However, propane/butane is not a liquid at ambient pressures. As such, it is not an organic liquid and is not subject to Subpart EEEE.

Tank 20 is a 1,680,000 gallon external floating roof tank that stores sour water and is not subject to another MACT standard. Sour water does not have a HAP content greater than 5% by weight; as such, it is not subject to Subpart EEEE.

Tank 64 is a 7,600 gallon fixed roof tank that stores Nalco 5300 stabilizer oil additive. This tank is not subject to another MACT and this material is considered an organic liquid under Subpart EEEE. As such, this tank is an affected source under Subpart EEEE.

Note that the blending chemicals stored in other facility tanks do not qualify as organic liquids and, as such, are not subject to Subpart EEEE.

In the unlikely event that the ISOM Unit is shut down for an extended period, PSR may choose to ship out the benzene-rich unit feedstock in lieu of processing. The feed stream is approximately 5.5 wt% benzene. As such, the stream qualifies as an organic liquid under Subpart EEEE and the loadout potentially triggers Subpart EEEE requirements. However, because this scenario would most likely be part of maintenance or an upset, any equipment required for the loadout would be non-permanent and, under 40 CFR 63.2338(c)(2), would be

exempt from Subpart EEEE requirements. Should this event occur and some of these assumptions not be the case, Subpart EEEE requirements may apply. Because this event is so unlikely, Subpart EEEE requirements are not listed in the AOP for the ISOM Unit.

PSR receives denatured ethanol primarily via train car and blends it into the gasoline as it is loaded out by truck. At first glance, the ethanol could be considered an organic liquid under Subpart EEEE. However, an organic liquid under Subpart EEEE must include 5 wt% of the listed HAP. Ethanol is not a HAP but it is denatured using 5 wt% gasoline or natural gasoline. To reach the 5 wt% HAP threshold in Subpart EEEE, gasoline and natural gasoline will need to be pure HAP, which is not the case. In addition, Subpart EEEE exempts gasoline from being a subject organic liquid. As such, Subpart EEEE does not apply to the ethanol unloading and storage.

2.2.10 40 CFR 63 Subpart YYYY - National Emission Standards for Hazardous Air Pollutants for Stationary Combustion Engines

When the Cogens were a stand-alone facility, they were an area source of HAP; however, when Shell took ownership of the Cogens, they became part of a major source of HAP and potentially subject to 40 CFR 63 Subpart YYYY. However, the Cogens are still considered existing units since a change in ownership does not change the existing status of the turbines (63.6090(a)(1)). According to 63.6090(b)(4), "[e]xisting stationary combustion turbines in all subcategories do not have to meet the requirements of this subpart and of subpart A of this part. No initial notification is necessary for any existing stationary combustion turbine, even if a new or reconstructed turbine in the same category would require an initial notification." As such, 40 CFR 63 Subpart YYYY applies to the Cogens but there are no applicable requirements to be listed in the AOP.

2.2.11 40 CFR 63 Subpart ZZZZ – National Emission Standards for Hazardous Air Pollutants: Reciprocating Internal Combustion Engines

40 CFR 63 Subpart ZZZZ applies to various Reciprocating Internal Combustion Engines (RICE) located at area and major sources of HAP. Note that engine test cells/stands are not subject to Subpart ZZZZ. Table 2-2 describes the subject RICE at the refinery.

Table 2-2 PSR Reciprocating Internal Combustion Engines and 40 CFR 63 Subpart ZZZZ Applicability

Unit	Location	Equipment ID	Year Installed	Fuel/Type	Emergency Service?	Rating (hp)
Emergency Generator for process units	Control Room 2	30LEG2	1993	Diesel/CI	Yes	230
Emergency firewater pump	BOHO	33PGE3	1972	Diesel/CI	Yes	227
Firewater pump	BOHO	33PGE14	1987	Diesel/CI	Yes	261
Firewater pump	BOHO	33PGE15	1987	Diesel/CI	Yes	261
Stand-by Wharf Generator	RPS-Dock	30LEG5	2002	Diesel/CI	Yes	755
Main Control Room Emergency Generator	Main Control Room	30LEG6	2008	Diesel/CI	Yes	237
EP Outfall Pump	RPS-Effluent Plant	9QG68	2013	Diesel/CI	No	500
Radio Tower Emergency Generator	RPS	30LEG7	2013	Diesel/CI	Yes	80

All but the Main Control Room Emergency Generator, EP Outfall Pump, and the Radio Tower Emergency Generator are considered existing emergency RICE under 40 CFR 63 Subpart ZZZZ. They are considered "existing" under the rule because each engine with a power rating equal to or less than 500 brake horse power (hp) was constructed on or before June 12, 2006, and each engine with a power rating greater than 500 hp was constructed on or before December 19, 2002. The physical properties, construction history, and regulatory applicability for each RICE are described in more detail in the associated process unit description.

RICE Emergency Service

40 CFR 63 Subpart ZZZZ specifically describes what it means to be in emergency service. Pursuant to 40 CFR 63.6640(f)(2), to be considered an emergency RICE, the engine must meet the following operational requirements:

- There is no time limit on the use of emergency stationary RICE in emergency situations.
- The emergency stationary RICE may be operated for a maximum of 100 hours per calendar year for the purposes of maintenance checks, readiness testing, emergency demand response, and voltage or frequency deviation support. Any operation for non-emergency situations as allowed described in the next bullet counts as part of the 100 hours per calendar year.
- The emergency stationary RICE may be operated for an additional 50 hours per year in non-emergency situations. The 50 hours of operation in non-emergency situations are counted as part of the 100 hours per calendar year for maintenance and testing and emergency demand response. Except for under specific circumstances, the 50 hours per year for non-emergency situations cannot be used for peak shaving or to generate income for a facility to supply power to an electric grid or otherwise supply power as part of a financial arrangement with another entity.

Any operation other than emergency operation, maintenance and testing, emergency demand response, and operation in non-emergency situations for 50 hours per year, as described above is prohibited. If the engine is not operated according to these requirements, the engine will not

be considered an emergency engine and will need to meet all the requirements for non-emergency engines.

Also, none of the refinery emergency generators are used or are contractually obligated to be available for more than 15 hours per calendar year for emergency demand response as described in 60.4211(f)(2)(ii) or voltage or frequency deviations of 5 percent or greater below standard voltage or frequency (60.4211(f)(2)(iii)). Should PSR choose to use the engines for either of these purposes, additional requirements will become applicable.

2.2.12 40 CFR 63 Subpart DDDDD - National Emission Standards for Hazardous Air Pollutants for Boilers and Process Heaters

40 CFR 63 Subpart DDDDD applies to industrial, commercial, or institutional boilers and process heaters that are located at a major source of hazardous air pollutants (HAPs), commonly referred to as the Major Source Boiler MACT. The Initial Notification under 40 CFR 63. 7545(b) was due 120 days after January 31, 2013 (i.e., May 31, 2013). On May 31, 2013, the NWCAA received the initial notice from the refinery listing all the subject units at the refinery, all having a heat input capacity equal to or greater than 10 MMBtu/hour firing refinery fuel gas and natural gas and all commenced construction prior to June 4, 2010 (i.e., are considered existing units). The list included all 18 fired process heaters at the refinery and the Erie City Boiler.

The CO Boilers qualify as boilers under Boiler MACT; however, they are also subject to 40 CFR 63 Subpart UUU so they are not subject to Boiler MACT pursuant to 40 CFR 63.7491(h). Heat recovery steam generating (HRSG) units at the Cogens are considered waste heat boilers under the Boiler MACT; waste heat boilers are excluded from the definition of “boiler” as affected sources under the Boiler MACT. Therefore, the Cogen HRSGs are not subject to Boiler MACT.

All the subject process heaters and boilers fire natural gas and refinery fuel gas. As such, these units fall into the “units designed to burn gas 1 fuels” subcategory. Some of the units are equipped with a continuous oxygen trim system. An oxygen trim system, for the purposes of PSR, may control oxygen to either a setpoint or a set-range using either oxygen or carbon monoxide sensors. To influence the oxygen, the oxygen trim control system at PSR may manipulate the air supply directly or may adjust the fuel supply or the heater’s operation.

Boiler MACT does not require any pollutant-specific emission limits for existing or new heaters and boilers in the gas 1 subcategory. Instead, the rule requires work practice standards that include periodic “tune-ups” as described in 63.7540(a)(10). For those units equipped with a continuous oxygen trim system, tune-ups are required once every five years; those without continuous oxygen trim systems must have tune-ups annually. The initial tune-up must take place by the compliance date of January 31, 2016. Table 2-3 lists the subject process heaters and boilers and whether they have continuous oxygen trim.

Table 2-3 : Boiler MACT Units and Continuous Oxygen Trim

Unit	Unit	Name	Oxygen Trim Control
Erie City Boiler	BOHO	31GF1	Yes
Charge Heater	CRU1	6DF2	No
Interheater 1	CRU1	6DF3	No
Interheater 2	CRU1	6DF4	No
Atmospheric Charge Heaters	VPS	1A-F5/6	Yes
Gas Oil Tower Heater	VPS	1A-F4	Yes
Vacuum Charge Heater	VPS	1A-F8	Yes
Charge Heater	DCU	15-F100	Yes
Charge Heater	HTU1	7CF4	No
Fractionator Reboiler	HTU1	7CF5	No
Charge Heater	HTU2	11H101	Yes
H_2S Stripper Reboiler	HTU2	11H102	Yes
Fractionator Reboiler	HTU2	11H103	Yes
Charge Heater	CRU2	10H101	Yes
Interheater 1	CRU2	10H102	Yes
Interheater 2	CRU2	10H103	No
Stabilizer Reboiler	CRU2	10H104	No
CDHDS Heater	HTU3	60F201	Yes

Boiler MACT also requires a one-time energy assessment performed by a qualified energy assessor as described in 40 CFR 63 Subpart DDDDD Table 3. For existing sources, the energy assessment must be completed by the compliance date of January 31, 2016.

In addition, these work practice standards also serve as the compliance demonstration during startups and shutdowns. The refinery is required to maintain records of the calendar date, time, occurrence and duration of each startup and shutdown and the type and amount of fuels used during each startup and shutdown.

The emission limits apply at all times except during startup and shutdown. However, the rule allows for an affirmative defense for violation of emission standards during malfunction. If the refinery chooses to assert an affirmative defense, PSR shall submit a written report with all necessary supporting documentation that it has met the requirements set forth in 63.7500. This affirmative defense report shall be included in the first periodic compliance report, deviation report, or excess emission report otherwise required after the initial occurrence of the violation.

2.2.13 40 CFR 63 Subpart GGGGG – National Emission Standards for Hazardous Air Pollutants: Site Remediation

40 CFR 63 Subpart GGGGG applies to the emissions of hazardous air pollutants (HAPs) at facilities where remediation activities are used to clean up spills and contaminated soil. PSR does infrequently conduct site remediation projects to, for instance, clean up after a leaking storage tank. However, because the total HAP quantity in remediation materials for the year is less than 1 Mg refinery-wide or the remediation is completed in no more than 30 consecutive calendar days, the refinery is only subject to recordkeeping requirements. This recordkeeping requirement is found in AOP Section 4 because it is a generally applicable requirement that applies refinery-wide.

2.2.14 40 CFR 63 Subpart PPPPP – National Emission Standards for Hazardous Air Pollutants for Engine Test Cells/Stands

40 CFR 63 Subpart PPPPP applies to the emissions of hazardous air pollutants (HAPs) at engine test cells/stands located at major sources of HAP emissions. PSR maintains five octane test engines in the refinery lab for fuel testing, which qualifies as an engine test cell/stand. The test engines were installed prior to May 14, 2002; therefore, it is considered an existing engine test cell/stand. Pursuant to 40 CFR 63.9290(b), existing source are subject to this subpart but do not have to meet the requirements of Subpart PPPPP and 40 CFR 63 Subpart A.

2.3 Leak Detection and Repair (LDAR)

Fugitive VOC and HAP emissions occur throughout the refinery from leaking components and process equipment. These components include pumps, valves and compressors, flanges, open-ended lines and safety vents to the atmosphere. Process units at the refinery are periodically monitored for leaks and when leaks are identified they are required to be repaired within the time deadline in the applicable requirement. This work practice standard is referred to as a leak detection and repair (LDAR) program.

For any particular process unit, there may be one or more LDAR requirements driving the program depending on the date of construction or modification of any particular process unit.

NWCAA 580.8: NWCAA 580.8 requires an LDAR program conducted in accordance with 40 CFR 60 Subpart GGG (which references 40 CFR 60 Subpart VV) for components handling VOC at process units and loading sites which utilize butane or lighter hydrocarbons as a primary feedstock, and excludes components in refinery fuel gas service.

In the current version of the regulation (amended March 13, 1997), the affected process units include alkylation, polymerization, and LPG loading. However, in the federally-enforceable version of the regulation that is included in the State Implementation Plan (SIP) (December 13, 1989), the affected process units include alkylation, polymerization, and light ends units. The only potentially subject units at PSR are the ALKY, POLY, and the associated dedicated loading.

To reduce overlaps between NWCAA 580 and similar requirements under federal regulations the NWCAA adopted NWCAA 580.26, which exempts any petroleum refinery process unit, storage facility, or other operation subject to federal VOC or HAP standards from 580.3 through 580.10. As such, ALKY1 and ALKY2 would technically be exempt from NWCAA 580.8 because they are subject to other federal rules. However, NWCAA 580.26 is not in the SIP and, as such, is not federally enforceable. Therefore, in the AOP, the references to NWCAA 580.8 for those process units that are subject to other federal rules are dated only with the date of the version incorporated into the SIP regulation (i.e., December 13, 1989) and for those that are not subject to other federal rules are dated with both the date of the SIP version as federally enforceable and the date of the current rule (i.e., March 13, 1997) as state only.

In addition, for those units subject to the LDAR requirements under 580.8, the AOP also calls out one item because it is considered to be more stringent than similar LDAR requirements of 40 CFR 60 Subparts GGG and VV. That is the requirement under NWCAA 580.846 to inspect relief vents that have opened to the atmosphere within 24 hours of venting. The federal regulation allows up to five days for the relief valve to be checked to ensure that it has reseated.

40 CFR 60 Subpart VV: 40 CFR 60 Subpart VV defines the LDAR program requirements for synthetic organic chemical manufacturing industry (SOCMI) process units in VOC service.

40 CFR 60 Subpart GGG: 40 CFR 60 Subpart GGG requires an LDAR program conducted in accordance with 40 CFR 60 Subpart VV in the entire process unit for components in VOC service. Applicability is triggered when construction, reconstruction, or modification commences after January 4, 1983, and on or before November 7, 2006. Note that compressors in hydrogen service are explicitly exempted from the monitoring requirements.

40 CFR 60 Subpart GGGa: 40 CFR 60 Subpart GGGa requires an LDAR program conducted in accordance with 40 CFR 60 Subpart VVa in the entire process unit for components in VOC service. Applicability is triggered when construction, reconstruction, or modification commences after November 7, 2006. Note that compressors in hydrogen service are explicitly exempted from the monitoring requirements.

Note that the definition of "process unit" under 40 CFR 60 Subparts VV (6/2/08), GGG (11/16/07), and GGGa (11/16/07) is currently stayed. Each regulation includes identical language. For example, Subpart GGG (60.590(e)), states:

> *Stay of standards.* Owners or operators are not required to comply with the definition of "process unit" in §60.590 of this subpart until the EPA takes final action to require compliance and publishes a document in the Federal Register. While the definition of "process unit" is stayed, owners or operators should use the following definition:
>
> *Process unit* means components assembled to produce intermediate or final products from petroleum, unfinished petroleum derivatives, or other intermediates; a process unit can operate independently if supplied with sufficient feed or raw materials and sufficient storage facilities for the product.

The definition of process unit that is stayed is:

> *Process unit* means the components assembled and connected by pipes or ducts to process raw materials and to produce intermediate or final products from petroleum, unfinished petroleum derivatives, or other intermediates. A process unit can operate independently if supplied with sufficient feed or raw materials and sufficient storage facilities for the product. For the purpose of this subpart, process unit includes any feed, intermediate and final product storage vessels (except as specified in §60.482–1(g)), product transfer racks, and connected ducts and piping. A process unit includes all equipment as defined in this subpart.

Essentially, since the new definition is stayed, the rule reverts to the older definition. As such, under the older definition, equipment not explicitly part of a production unit, such as storage tanks and loading racks, are currently not subject to the LDAR requirements under 40 CFR 60 Subparts VV, GGG, and GGGa.

40 CFR 61 Subpart J: 40 CFR 61 Subpart J requires an LDAR program conducted in accordance with 40 CFR 61 Subpart V for equipment leaks of benzene. As was stated above, none of the streams in the refinery have a benzene content high enough to be subject to 40 CFR 61 Subpart J.

40 CFR 63 Subpart CC: 40 CFR 63 Subpart CC requires an LDAR program conducted in accordance with 40 CFR 60 Subpart VV for components in HAP service. Note that compressors in hydrogen service are explicitly exempted from the monitoring requirements.

Pursuant to 40 CFR 63.640(p), equipment leaks subject to 40 CFR 63 Subpart CC along with provisions under NSPS or NESHAP (i.e., 40 CFR 61) that were promulgated prior to September 4, 2007 must comply with Subpart CC. Those equipment leaks that are subject to both Subpart CC and Subpart GGGa must comply with Subpart GGGa. Subpart CC (63.640(q)) also provides an overlap provision that allows the refinery to apply a consistent LDAR program in that a particular process unit:

> For overlap of subpart CC with local or State regulations, the permitting authority for the affected source may allow consolidation of the monitoring, recordkeeping, and reporting requirements under this subpart with the monitoring, recordkeeping, and reporting requirements under other applicable requirements in 40 CFR parts 60, 61, or 63, and in any 40 CFR part 52 approved State implementation plan provided the implementation plan allows for approval of alternative monitoring, reporting, or recordkeeping requirements and provided that the permit contains an equivalent degree of compliance and control.

Orders of Approval to Construct: Orders of Approval to Construct (OAC) issued under minor new source review (NSR) may require an enhanced LDAR program as a condition of the order under BACT.

Consent Decree: The Equilon Consent Decree requires enhanced LDAR programs throughout the refinery for existing equipment as of the date of lodging (March 21, 2001). However, the requirements listed in the Consent Decree are not considered Title V applicable requirements, and therefore are not listed in this table, or under the specifically applicable requirements in AOP Section 5.

Table 2-4 presents a list of process units at PSR and the LDAR program applicability.

Table 2-4 LDAR Program Regulatory Applicability

Process Unit	GGG	GGGa	CC	VV	OAC (enhanced)	NWCAA 580.8	Notes
VPS	X		X				
DCU	X		X				
FCCU	X		X				
POLY	X					X	
Nonene Unit				X			SOCMI unit
CRU1		X	X				
CRU2			X				
Alky1	X		X		887a	X	
Alky2			X			X	
BHU	X		X		772b		
HTU1			X				
HTU2	X		X		630c		
HTU3	X		X		787e		
Isom	X		X		883b		
Benzene Reduction Unit		X	X		1045[b]		
SRU	X		X				
Cogen							No LDAR
Gasoline/Diesel Truck Loading[a]			X				
Diesel Railcar Loading[a]							No LDAR
Nonene Loading[a]							No LDAR
Ethanol Unloading & Storage[a]							No LDAR
Dock							No LDAR
LPG Loading						X	
Flares			X				
FGR	X		X		918b		

Process Unit	GGG	GGGa	CC	VV	OAC (enhanced)	NWCAA 580.8	Notes
Tank Farm			X				

[a] As discussed above, due to the stay of the "process unit" definition, storage tanks and loading racks are currently not subject to the LDAR requirements in 40 CFR 60 Subparts VV, GGG, and GGGa.
[b] The OACs do not include enhanced LDAR requirements because the units were already subject to Subpart GGGa.

See SOB Section 3 regarding LDAR program applicability at specific process units.

The Equilon Consent Decree requires the refinery to implement an "enhanced" LDAR program that is more stringent than the requirements of Subpart VV and is generally as stringent as the other potentially applicable programs. As such, PSR has chosen to comply with the Equilon Consent Decree LDAR requirements at all process units throughout the refinery, regardless of direct applicability, as the most stringent program.

2.4 Continuous Emission Monitoring Systems

Continuous Emission Monitoring Systems (CEMS) are mandated via a variety of mechanisms, including federal rules (e.g., NSPS, NESHAP/MACT, Acid Rain) and construction permits (e.g., OACs, PSD). Table 2-5 lists the CEMS at PSR and the type of requirement that mandates its use.

Table 2-5 CEMS at PSR

Process Unit	CEMS Location	Compounds Monitored	Type of Requirement
VPS	F4 Stack	NO_X, O_2	OAC 929b
VPS	F5-F6 Stack	NO_X, O_2	OAC 919a
FCCU	Main Fuel Gas Drum	H_2S	NSPS J/CO 07
FCCU	Wet Gas Scrubber	NO_X, SO_2, CO, O_2	OAC 623f, NSPS J/CO 10, MACT UUU
HTU 1	Heater Stack (common stack to 7C-F4 and 7C-F5)	SO_2, O_2	NSPS J
HTU 2	HTU #2 Fuel Gas Drum	H_2S	NSPS J/CO 07
HTU 3	HTU #3 Fuel Gas Drum	H_2S	NSPS J, OAC 787e
SRU	Primary Incinerator Stack (SRU3)	SO_2, O_2	OAC 828a, NSPS J, MACT UUU
SRU	SRU4 Incinerator Stack	SO_2, O_2	OAC 828a, NSPS J, MACT UUU
Cogens	Cogen 1, 2, 3 Stacks	NO_X, NH_3, CO, SO_2, O_2	OAC 475h, OAC 476g, NSPS GG, NSPS J, NSPS Db
Flare	East Flare	H_2S, SO_2	NSPS Ja

If the CEMS is mandated by NSPS or MACT, it must comply with the requirements in the applicable subpart along with the referenced terms in NSPS Subpart A (60.13) or in MACT Subpart A (63.8). The respective Subpart As list general CEMS installation, operation, and QC/QA requirements. The specific subpart (e.g., NSPS Subpart J, MACT Subpart UUU)

mandates the specific QA/QC thresholds and also references the pollutant-specific Performance Specifications (PS) under 40 CFR 60 Appendix B for installation and initial evaluation and 40 CFR 60 Appendix F for the ongoing quality control and quality assurance.

In the case of NSPS Subpart J and MACT Subpart UUU, they can apply to the same pollutant and both require a CEMS to demonstrate compliance (i.e., CO for FCCU, SO_2 for SRU). As such, Subpart UUU has an overlap provision that generally aligns the requirements with those in Subpart J to simplify compliance.

In addition, all CEMS installed in the NWCAA jurisdiction must also comply with NWCAA 367 which references NWCAA Appendix A (formerly referred to as NWCAA 365, 366 and the "Guidelines for Industrial Monitoring Equipment and Data Handling"). Note that NWCAA 365 and 366 are federally enforceable (i.e., are included in the SIP). NWCAA 367 and NWCAA Appendix A were adopted on July 14, 2005; the new regulations are "State Only" until incorporated into the State Implementation Plan.

NWCAA Appendix A references the 40 CFR 60 Appendix B Performance Specifications for CEMS installation requirements and 40 CFR 60 Appendix F for ongoing operation. It also explicitly lists certain operating requirements (e.g., calibration; maintenance; auditing; data recording, validation, and reporting).

Generally, the calibration drift (zero and span) for each CEMS must be checked daily. Data accuracy assessments shall be performed at least once every calendar quarter. This entails a relative accuracy test audit (RATA) must be performed once per year and cylinder gas audits (CGAs) performed once during each of the other calendar quarters. Data recorded during periods of CEMS breakdown, repair, calibration checks, and zero and span adjustments shall not be included in the data averages. Pursuant to NWCAA Appendix A III(F)(14), CEMs are required to maintain greater than 90% data availability on a monthly basis.

In addition, CEMS performance is required to be submitted to the NWCAA on a monthly basis. A large part of the monthly report includes information about the duration and nature of CEMS downtime, changes made to the CEMS, total operating time and dates of CEMS audits or certifications. In addition, the monthly report includes disclosure of deviations from required monitoring and exceedances of emission limits.

The CEMS quality assurance reports which document drift, out of control periods, and the results of relative accuracy test audits (RATA) and cylinder gas audits (CGA) are to be reported on a quarterly basis.

2.5 Opacity

Ongoing compliance with visible emissions standards (i.e., 20% opacity under NWCAA 451 and/or more stringent NSR conditions) are qualitatively assessed by conducting periodic visual observations of the refinery combustion process unit stacks. Unless otherwise specified in the term, the MR&R for visible emissions is found in AOP Section 6.1.

For combustion units firing gaseous fuels, PSR must conduct monthly qualitative observations of the refinery combustion unit stacks. If visible emissions are observed, PSR must reduce the opacity to zero, or take certified opacity readings using Method Ecology 9A within 24 hours of observing the visible emissions and daily thereafter until opacity is shown to be less than the applicable standard. Visible emissions are considered to be in excess of the applicable opacity limit if a certified reading is not taken on the mandated schedule.

The observation frequency may be reduced to quarterly if no visible emissions are observed for six consecutive months. If any visible emissions are noted during the observation, the frequency shall revert to monthly observations of individual stacks.

The only units at the refinery that fire oil are the Cogens and the various emergency generators. Ongoing compliance with the opacity requirements for the Cogens are handled in AOP Section 5.

Because the emergency generators only operate sporadically and are typically not regulated under NSR, an explicit ongoing compliance demonstration is deemed to be not necessary.

Visible observation monitoring under AOP Section 6.1 is also used to determine ongoing compliance with various particulate emission standards (e.g., 0.05 grain/dscf under NWCAA 455). Although particulate emission rates are not directly linked to opacity, a zero percent opacity action level is likely to ensure that emissions are less than the applicable grain loading standard. This surrogate monitoring approach ensures proper operation of equipment, thereby reducing the potential for particulate emissions from the emissions unit.

2.6 Compliance Assurance Monitoring

The 40 CFR Part 64 Compliance Assurance Monitoring (CAM) rule requires owners and operators to monitor the operation and maintenance of their control equipment so that they can evaluate the performance of their control devices and report whether or not their facilities meet established emission standards. If owners and operators of these facilities find that their control equipment is not working properly, the CAM rule requires them to take action to correct any malfunctions and to report such instances to the appropriate enforcement agency (i.e., State and Local environmental agencies). Additionally, the CAM rule provides some enforcement tools that will help State and Local environmental agencies require facilities to respond appropriately to the monitoring results and improve pollution control operations.

The CAM rule applies to each Pollutant Specific Emissions Unit (PSEU) when it is located at major source that is required to obtain a Part 70 or 71 permit and it meets all of the following criteria:

- be subject to an emission limitation or standard
- use a control device to achieve compliance
- have potential pre-control emissions that exceed or are equivalent to the major source threshold

For large Pollutant Specific Emission Units (PSEUs) (i.e., with controlled PTE emissions greater than 100 tons per year), CAM should be addressed in the initial Title V permit or as part of a significant revision. CAM for Other PSEUs is to be addressed at the first Title V permit renewal.

Please note that the term “PSEU” means an emissions unit considered separately with respect to each regulated air pollutant. Also the term “control device” means equipment, other than inherent process equipment, that is used to destroy or remove air pollutants prior to discharge to the atmosphere. The term “control device” does not include passive methods that prevent pollutants from forming such as low NO_X burner, lids, or seals, or inherent process equipment provided for safety or material recovery.

The following emission limitations or standards are exempted from the CAM rule:

- NSPS or NESHAP standards proposed after November 15, 1990, since those standards have been and will be designed with monitoring that provides a reasonable assurance of compliance;
- stratospheric ozone protection requirements under Title VI of the act;
- acid rain program requirements;
- emission limitations or standards or other requirements that apply solely under an approved emissions trading program;
- emissions cap that meets requirements of 70.4(b)(12) or 71.6(a)(13);
- emission limitations or standards for which a part 70 or 71 permit specifies a continuous compliance determination method, as defined in 40 CFR 64.1; and
- certain municipally-owned utility units, as defined in 40 CFR 72.2.

Please note that the emission unit is not exempted from the CAM rule if nonexempt emission limitations or standards (e.g., a state rule or an older NSPS emission limits) apply to the emissions unit.

Table 2-6 provides a summary of the CAM applicability to the refinery process units for those pollutants that have an emission standard. Note that this applicability analysis initially reviews each PSEU for being subject to an emission standard, whether a control device is used to meet that standard, and exemption applicability. Any PSEU that remains as potentially subject is further examined to determine if the pre-control emissions exceed or are equivalent to the major source threshold. The pollutants listed are those that have emission limits as listed in AOP Sections 4 or 5.

Table 2-6 CAM Applicability

PSEU	CAM Applicability
VPS - Gas Oil Tower Heater (1A-F4)	NO_X (low NO_X burners) – DOES NOT APPLY (no active control device) SO_2 – DOES NOT APPLY (no active control device)[1] PM/Opacity – DOES NOT APPLY (no active control device)
VPS – Atmospheric Charge Heaters (1A-F5/F6)	NO_X (low NO_X burners) - DOES NOT APPLY (no active control device) SO_2 – DOES NOT APPLY (no active control device)[1] PM/Opacity – DOES NOT APPLY (no active control device)
VPS – Vacuum Charge Heater (1A-F8)	NO_X (low NO_X burners) - DOES NOT APPLY (no active control device) SO_2 – DOES NOT APPLY (no active control device)[1] PM/Opacity – DOES NOT APPLY (no active control device)
DCU - Charge Heater (15F-100)	NO_X (low NO_X burners) - DOES NOT APPLY (no active control device) SO_2 – DOES NOT APPLY (no active control device)[1] PM/Opacity – DOES NOT APPLY (no active control device)
DCU – Coke Loading (LR-7)	PM/Opacity - DOES NOT APPLY (no active control device)
FCCU – CO Boilers (COB-1 & 2) / FCCU Regenerator	NO_X (low NO_X burners) – DOES NOT APPLY (no active control device) SO_2 (WGS) – DOES NOT APPLY (equipped with continuous compliance determination method (CEMS)) Opacity (WGS) – DOES NOT APPLY (subject to NSPS J and MACT UUU – AMP) PM (gr/dscf) (WGS) – CAM APPLIES (see CAM Plan in SOB Appendix A) PM (lb/1000 lb coke burn-off) (WGS) – DOES NOT APPLY (subject to NSPS J and MACT UUU) CO (CO Boilers) – DOES NOT APPLY (subject to NSPS J and MACT UUU)
FCCU – Fresh Catalyst Hoppers	Opacity/PM (Baghouse) – DOES NOT APPLY (equipped with continuous compliance determination method (OAC 623f Conditions 11 through 16))
CRU1 – Charge Heater (6D-F2), Interheaters 1 & 2 (6D-F3 & 4)	NO_X (low NO_X burners) - DOES NOT APPLY (no active control device) SO_2 – DOES NOT APPLY (no active control device)[1] PM/Opacity – DOES NOT APPLY (no active control device)
CRU2 – Charge Heater (10H-101), Interheaters 1 & 2 (10H-102 & 103), Stabilizer Reboiler (10H-104)	SO_2 – DOES NOT APPLY (no active control device)[1] PM/Opacity – DOES NOT APPLY (no active control device)
HTU1 – Charge Heater (7C-F4), Fractionator Reboiler (7C-F5)	NO_X (low NO_X burners) - DOES NOT APPLY (no active control device) SO_2 – DOES NOT APPLY (no active control device)[1] PM/Opacity – DOES NOT APPLY (no active control device)

PSEU	CAM Applicability
HTU2 – Charge Heater (11H-101)	SO_2 – DOES NOT APPLY (no active control device)[1] PM/Opacity – DOES NOT APPLY (no active control device)
HTU2 - Stripper Reboiler Heater (11H-102), Fractionator Reboiler Heater (11H-103)	NO_X (low NO_X burners) - DOES NOT APPLY (no active control device) SO_2 – DOES NOT APPLY (no active control device)[1] PM/Opacity – DOES NOT APPLY (no active control device)
HTU3 – CDHDS Heater (60-F201)	NO_X (low NO_X burners) - DOES NOT APPLY (no active control device) SO_2 – DOES NOT APPLY (no active control device)[1] PM/Opacity – DOES NOT APPLY (no active control device)
SRU 3 & 4	SO_2 (incinerator) – DOES NOT APPLY (subject to NSPS J and MACT UUU) SO_2 (fuel sulfur content) – DOES NOT APPLY (no active control device)[1] PM/Opacity – DOES NOT APPLY (no active control device)
Erie City Boiler (31GF1)	SO_2 – DOES NOT APPLY (no active control device)[1] PM/Opacity – DOES NOT APPLY (no active control device)
Cogen 1, 2, & 3	NO_X (steam injection & SCR) - DOES NOT APPLY (equipped with continuous compliance determination method (CEMS)) NH_3 - DOES NOT APPLY (not criteria pollutant or HAP) SO_2 – DOES NOT APPLY (no active control device)[1] PM/Opacity – DOES NOT APPLY (no active control device) CO – DOES NOT APPLY (no active control device)
Gasoline/Diesel Truck Loading Terminal (LR-1)	SO_2 – DOES NOT APPLY (no active control device) PM/Opacity (vapor combustor) – DOES NOT APPLY (no active control device) VOC/HAP (vapor combustor) – DOES NOT APPLY (subject to NSPS XX and MACT CC)
Diesel Railcar Loading Rack (LR-4)	DOES NOT APPLY (no emission limits)
Nonene Truck and Railcar Loading Rack (LR-5)	DOES NOT APPLY (no emission limits)
Ethanol Unloading and Storage	VOC (floating roof) - DOES NOT APPLY (no active control device)
Marine Terminal	DOES NOT APPLY (no emission limits)
Flares (19N-F1, 2, & 3)	SO_2 – DOES NOT APPLY (no active control device)[1] PM/Opacity – DOES NOT APPLY (no active control device)
Flare Gas Recovery (FGR)	DOES NOT APPLY (no emission limits)
Control Room #2 Generator (30LEG2), BOHO Emergency Firewater Pump (33PGE3), BOHO Firewater Pump (33PGE14), & BOHO Firewater Pump (33PGE15)	SO_2 – DOES NOT APPLY (no active control device) PM/Opacity – DOES NOT APPLY (no active control device)
Wharf Stand-by Generator (30LEG5)	PM/Opacity – DOES NOT APPLY (no active control device) SO_2 – DOES NOT APPLY (no active control device)

PSEU	CAM Applicability
Main Control Room Emergency Generator (30LEG6) & Radio Tower Emergency Generator (30LEG7)	NMHC + NO_X - DOES NOT APPLY (no active control device) CO – DOES NOT APPLY (no active control device) PM – DOES NOT APPLY (no active control device) SO_2 – DOES NOT APPLY (no active control device) Opacity – DOES NOT APPLY (no active control device)
EP Outfall Pump (9QG68)	NO_X (exhaust gas recirculation) - DOES NOT APPLY (subject to MACT ZZZZ/NSPS Subpart IIII) NMHC - DOES NOT APPLY (no active control device) CO – DOES NOT APPLY (no active control device) PM – DOES NOT APPLY (no active control device) SO_2 – DOES NOT APPLY (no active control device) PM/Opacity (particulate filter; coalescing filter for crankcase) – DOES NOT APPLY (subject to MACT ZZZZ/NSPS Subpart IIII)
Effluent Plant and Sewer System	HAP/VOC (floating roof) - DOES NOT APPLY (no active control device) HAP/VOC (closed vent system & carbon canisters) - DOES NOT APPLY (subject to NESHAP FF/MACT CC)
Effluent Plant Tanks	VOC/HAP (floating roof) - DOES NOT APPLY (no active control device) VOC/HAP (closed vent system & carbon canisters) - DOES NOT APPLY (subject to NESHAP FF/MACT CC)
Storage Tanks	VOC/HAP (floating roof) - DOES NOT APPLY (no active control device)
Fugitive Components in gaseous, light liquid, and heavy liquid service	VOC/HAP – DOES NOT APPLY (uncontrolled: no active control device; controlled (e.g., routed to the flare): regulated under NSPS VV, GGG, GGGa/MACT CC which reference NSPS A/MACT A)
Heat Exchangers	HAP – DOES NOT APPLY (no active control device)
Miscellaneous Process Vents	VOC/HAP (flare) – DOES NOT APPLY (subject to MACT CC)
Catalyst Reforming Vents	HAP (organic & inorganic) – DOES NOT APPLY (subject to MACT UUU)
Process Drains	VOC/HAP – DOES NOT APPLY (uncontrolled/covered: no active control device; controlled (e.g., routed to the flare or carbon canister): regulated under NSPS QQQ/NESHAP FF/MACT CC)
Fuel Gas Sulfur Content[1]	SO_2 (amine system) – DOES NOT APPLY (equipped with continuous compliance determination method (CEMS))

[1] Fuel gas combustion devices are subject to fuel gas sulfur content requirements to limit SO_2 emissions. They are not equipped with add-on control devices and are, therefore, not subject to CAM. However, the amine system at the refinery acts to remove sulfur from the fuel gas which is the burned in the fuel gas combustion devices. CAM applicability to the amine system is addressed in an individual line item in the table.

Flares can be considered emission sources themselves with emission limits but also control devices for other refinery sources (e.g., miscellaneous process vents). The flare as emission source does not have any active control equipment to meet the emission standards (e.g., opacity, SO_2); therefore, CAM does not apply directly. However, when the flare serves as the control device (e.g., MPVs, equipment leaks), CAM is addressed for the controlled unit (see Table 2-6 above).

Several emission units are required to monitor operations with a CEMS (e.g., fuel sulfur content under NSPS J, NO_X on the Cogens under OAC 475h and 476g and NSPS GG, SO_2 on FCCU). These CEMS are also subject to NWCAA 367 and NWCAA Appendix A which requires quality assurance for the CEMS. As such, the CEMS is considered a continuous compliance determination method, which exempts it from CAM requirements.

OAC 623d was modified to include monitoring requirements for the fresh catalyst hopper at the FCCU. These requirements are considered to be a continuous compliance determination method and, since they have been rolled into the Part 70 permit, qualify for the CAM exemption.

As discussed in SOB Sections 2.1 and 2.2, the refinery emission units are subject to a variety of NSPS and MACTs. If the rules were proposed after November 15, 1990, they meet the exemption criterion above. The following list includes the NSPS and MACTs relied upon in the CAM analysis along with their respective proposal dates:

- 40 CFR 60 Subpart A: flare requirements initially proposed prior to January 21, 1986 (NSPS A)
- 40 CFR 60 Subpart J: initially proposed June 11, 1973 (NSPS J)
- 40 CFR 60 Subpart GG: initially proposed October 3, 1977 (NSPS GG)
- 40 CFR 60 Subpart VV: initially proposed January 5, 1981 (NSPS VV)
- 40 CFR 60 Subpart XX: initially proposed December 17, 1980 (NSPS XX)
- 40 CFR 60 Subpart GGG: initially proposed January 4, 1983 (NSPS GGG)
- 40 CFR 60 Subpart GGGa: initially proposed November 7, 2006 (NSPS GGGa)
- 40 CFR 60 Subpart QQQ: initially proposed May 4, 1987 (NSPS QQQ)
- 40 CFR 60 Subpart IIII: initially proposed July 11, 2005 (NSPS IIII)
- 40 CFR 61 Subpart FF: initially proposed September 14, 1989 (NESHAP FF)
- 40 CFR 63 Subpart A: flare requirements initially proposed August 11, 1993 (MACT A)
- 40 CFR 63 Subpart CC: initially proposed August 18, 1994 (MACT CC)
- 40 CFR 63 Subpart UUU: initially proposed September 11, 1998 (MACT UUU)
- 40 CFR 63 Subpart ZZZZ: initially proposed December 19, 2002 (MACT ZZZZ)

Certain emission units are subject to multiple overlapping NSPS, NESHAP, and MACT which rely on each other for the compliance demonstration to streamline the requirements (e.g., NSPS J and MACT UUU at the SRUs and FCCU; NESHAP FF and MACT CC at the Effluent Plant; NSPS QQQ, NESHAP FF, and MACT CC for process drains; NSPS XX and MACT CC at the Truck Rack Vapor Combustor; MACT A and CC for the flare). It is assumed in this analysis that when a newer post-November 5, 1990-proposal rule utilizes an older rule for the compliance demonstration, the older rule's compliance demonstration is adequate for CAM and qualifies for the exemption.

As can be seen in Table 2-6, CAM potentially applies only to the FCCU CO Boilers (COB-1 & 2)/ FCCU Regenerator for particulate matter. In this case, it has emission limits in terms of grain per dry standard cubic foot (gr/dscf) and uses the wet gas scrubber to meet this limit. Based on the PTE emission limit in OAC 623f (i.e., 202 tons per year PM_{10}), the FCCU is a major source post-control; as such, it has potential pre-control emissions that exceed the major source threshold and is subject to CAM for the gr/dscf limits and a CAM Plan is required.

Note that OAC 623f requires that the compliance demonstration for the gr/dscf and ton per year PM_{10} emission limits is annual source testing. This source testing is also used to demonstrate compliance with the applicable gr/dscf limits in NWCAA 455.13 and WAC 173-400-070(5)(a)(ii). However, as a unit with potential post-control major source emissions, CAM mandates that the required monitoring collect at least four data points each hour (one in each 15-minute quadrant). Based on site-specific considerations, this monitoring frequency can be reduced to no less than once per 24-hour period. As such, these stack tests do not satisfy the monitoring frequency requirement under CAM.

Sources subject to CAM must submit CAM Plans, the requirements of which are to be included in the AOP. CAM Plans provide information on the monitoring requirements, appropriateness of the control approach, details of the quality assurance/quality control measures, and rationale for selection of indicator range. PSR submitted a CAM Plan for the FCCU WGS for the gr/dscf limits, which is included in SOB Appendix A. Further discussion of the CAM Plan strategy and requirements can be found in SOB Section 3.3.

2.7 Acid Rain Program

Title IV of the Clean Air Act authorizes the EPA to establish the Acid Rain Program. The purpose of the Acid Rain Program is to significantly reduce emissions of sulfur dioxide and nitrogen oxides from utility electric generating plants in order to reduce the resultant adverse health and ecological impacts of acidic deposition (or acid rain). The EPA promulgated these rules in 40 CFR 72, 73, 74, 75, 77 and 78 on January 11, 1993 and March 23, 1993. Ecology also incorporated the Acid Rain program into Chapter 173-406 WAC effective on December 24, 1994.

Shell provided a determination letter issued by EPA dated July 29, 1994 stating that because Shell is a qualifying facility that had, as of, November 15, 1990, one or more qualifying power purchase commitments to sell at least 15% of its total net output capacity, the Cogen Units are not “affected units” under the Acid Rain Program pursuant to 40 CFR 72.6(b)(5) and, therefore, are not subject. However, the regulations limit the exempted facility to 130% of the total planned net output capacity. Thus, if more than 182 MWe of net output capacity is ever constructed at the facility, one or more units serving the capacity in excess of 182 MWe will become affected by the Acid Rain Program requirements.

2.8 Risk Management Plan (RMP)

The goal of 40 CFR Part 68 and the risk management program is to prevent accidental releases of substances that can cause serious harm to the public and the environment from short-term exposures and to mitigate the severity of releases that do occur. If a facility contains the hazardous or flammable substances listed in 40 CFR 68.130 in an amount above the “threshold quantity” specified for that substance, the facility operator is required to develop and implement a risk management program.

PSR maintains several substances in quantities greater than the listed thresholds. As such, PSR submits RMP to the EPA as appropriate. This regulation is implemented in its entirety by the EPA. The refinery will certify ongoing compliance with all applicable requirements of 40 CFR 68 in their annual compliance certification.

2.9 Greenhouse Gas (GHG) Regulation

Greenhouse gases are chemicals that contribute to climate change by trapping heat in the atmosphere. The greenhouse gases recognized by EPA and Ecology are: carbon dioxide (CO_2), methane (CH_4), nitrous oxide (N_2O), hydrofluorocarbons (HFC), perfluorocarbons (PFC), and sulfur hexafluoride (SF_6). "Hydrofluorocarbons" or "HFCs" means a class of greenhouse gases primarily used as refrigerants, consisting of hydrogen, fluorine, and carbon.

PSR is required to meet the following federal and state greenhouse gas emission requirements, as applicable.

2.9.1 40 CFR 98 – Federal Mandatory Greenhouse Gas Emission Inventory Regulation

This regulation applies to PSR due to its GHG emission levels and type of facility. The rule requires annual GHG inventories and reporting beginning in calendar year 2010, with reports due to EPA by no later than March 31 of the following year. This regulation is implemented in its entirety by the EPA. This regulation is excluded from appearing in the AOP because it does not contain applicable requirements under the Title V program (WAC 173-401-200(4)).

2.9.2 Chapter 173-407 WAC – Carbon Dioxide Mitigation Program, Greenhouse Gases Emissions Performance Standard and Sequestration Plans and Programs for Thermal Electric Generating Facilities (Part I WAC 173-407-010 through -070, and Part II, WAC 173-407-100 through -320)

Chapter 173-407 WAC, "Carbon Dioxide Mitigation Program, Greenhouse Gases Emissions Performance Standard And Sequestration Plans And Programs For Thermal Electric Generating Facilities", consists of two parts: Part I, WAC 173-407-010 through -070, and Part II, WAC 173-407-100 through -320. According to WAC 173-407-005, Part II, "Greenhouse Gases Emissions Performance Standard And Sequestration Plans And Programs For Baseload Electric Generation Facilities Implementing Chapter 80.80 RCW", is the emissions performance standard that must be met first. Then the requirements of Part I, "Carbon Dioxide Mitigation For Fossil-Fueled Thermal Electric Generating Facilities, Implementing Chapter 80.80 RCW", are applied.

The Part II greenhouse gas emissions performance standard is applicable to all existing baseload electric cogeneration facilities and units when, among other situations, the existing facility or unit is subject to a change in ownership (WAC 173-407-120(4)(c)). The cogeneration facility is a baseload facility that began operation in the early 1990s as March Point Cogeneration Company (MPCC). PSR took ownership of MPCC on February 1, 2010. As such, the Cogens are subject to the emission standard for Greenhouse Gases of 1,100 lb/MW-hr. With the applicability of the emission standard, PSR must perform the mandated monitoring, testing, and reporting. This regulation is implemented in its entirety by Ecology. Additionally, this regulation is excluded from appearing in the AOP because it does not contain applicable requirements under the Title V program (WAC 173-401-200(4)).

Part I requirements of the regulation only apply during the permitting of new fossil-fueled thermal electric generating facilities and expansions of existing fossil-fueled thermal electric generating facilities (i.e., an increase in station-generating capability of greater than 25 MWe or an increase in CO_2 emissions output by 15% or more). Because the PSR cogeneration facility was constructed prior to July 1, 2004 and the generation capacity has not been expanded since, Part I of the ch 173-407 WAC does not apply.

2.9.3 Chapter 173-441 WAC – Reporting of Emissions of Greenhouse Gases

Chapter 173-441 WAC, "Reporting of Emissions of Greenhouse Gases", adopts a mandatory greenhouse gas reporting rule for:

- Suppliers that supply applicable fuels sold in Washington state of which the complete combustion or oxidation would result in at least 10,000 metric tons of carbon dioxide annually; or
- Any listed facility that emits at least 10,000 metric tons of carbon dioxide equivalents (CO_2e) of greenhouse gases annually in the state.

Chapter 173-441 WAC was adopted by Ecology on December 1, 2010 and became effective on January 1, 2011. This regulation applies to PSR due to the fact that it emits at least 10,000 metric tons of CO_2e of greenhouse gases per year (see SOB Table 1-3 and Table 1-4). Similar to the federal reporting rule under 40 CFR 98, the rule requires annual GHG inventories due to Ecology by no later than March 31 of the following year beginning for calendar year 2012. This regulation is implemented in its entirety by Ecology. Because the statutory authority for ch 173-441 WAC was the state Clean Air Act (ch 70.94 RCW), it is considered an applicable requirement under the air operating permit program (WAC 173-401-200(4)); as such, it is included in the AOP.

3. PROCESS DESCRIPTIONS, CONSTRUCTION HISTORY AND REGULATORY APPLICABILITY

The following section provides a description of each refinery process area along with a brief construction history and discussion of specific regulatory applicability issues to support determinations in the AOP. For further detail regarding the construction permit history or issued OACs, see the previous version of the AOP SOB or specific permitting documentation.

The refinery areas are presented in the same order found in the AOP for ease in cross-referencing. The construction history provides a valuable insight into how and why specific requirements were applied during the NSR permitting. In general, one-time only conditions that have been met are not discussed because they are not considered part of on-going compliance requirements for the facility. If a specific term in the AOP is clear and consistent with the underlying requirement there is no need to discuss the term further in the SOB. However, where gap filling has occurred, a regulatory interpretation has been made, or where the level of regulatory complexity warrants clarification, they are discussed herein.

3.1 Vacuum Pipe Still (VPS)

Sometimes referred to as the Crude Unit, the Vacuum Pipe Still (VPS) is considered the first stage of crude processing at the refinery. Here, crude oils are "washed" in the Desalter to remove salts and other naturally occurring contaminants. After washing, the crude is heated to about 650°F in the 1A-F5 & 1A-F6 charge heaters and then routed to the Atmospheric Distillation Tower where it physically separates into fractions with specific boiling point ranges. Further separation is achieved by distillation under vacuum at the Vacuum Pipe Still or by steam stripping. The light fractions, such as propane, naphtha, kerosene, and diesel, generated from atmospheric distillation can be further processed or used as finish product blending stocks often referred to as “straight run” products. Heavier fractions are routed to the Gas Oil Distillation Tower where gas oils are separated before routing to the FCCU as feedstock. The heaviest fractions are produced from the bottom of the VPS and are called vacuum residuum. The vacuum residuum is sent to the DCU as a feedstock or can be blended into heavy finished products such as bunker or marine fuel oils.

The charge rate capacity of the VPS is dependent on the characteristics of the crude oils that are processed. This is a result of different heat loads needed for processing and the fact that differing crude oils will produce different product mixes during processing.

Major equipment at the VPS include the desalters, flash drum, heaters, atmospheric tower, gas oil tower, side strippers, vacuum tower, accumulator drums, and coalescers. Operating temperatures range from ambient to 780 °F. Operating pressures range from 6 mm Hg to 450 psi. The unit has a number of components in heavy liquid, light liquid, and gaseous service that can emit fugitive VOC and HAPs. Other activities that may result in emissions to the air are conducted periodically to properly operate and maintain the equipment.

Construction History and Regulatory Applicability

The original crude unit was built with the refinery in 1958. In 1975, two new charge heaters and a gas oil heater were installed as part of the Octane Improvement project.

Gas Oil Heater (1A-F4) and Atmospheric Charge Heaters (1A-F5 & 1A-F6): During early 2000, PSR voluntarily installed low NO_X burners on VPS heaters 1A-F5 and 1A-F6. OAC 919 on September 12, 2005 was issued to incorporate the emissions limits and emissions reductions from this installation of low NO_X burners in the VPS heaters into federally enforceable permit requirements as required by the Consent Decree. However, the unit was not "modified" for the purposes of new source review or NSPS. As such, NSPS requirements were not triggered as a result of this project. OAC 919 has since been revised to OAC 919a (issued April 12, 2013) for non-construction-related regulatory applicability and verbiage changes.

Similarly, OAC 929 was issued on September 12, 2005 permitting the installation of low NO_X burners in heater 1A-F4 as required by the Heater and Boiler Consent Decree with an emission limit of 0.035 lb/MMBtu on a 12-month average. This project did not trigger NSPS requirements. When testing demonstrated that the burners were not able to meet the guaranteed limit, OAC 929a was issued to include a less stringent limit (0.06 lb/MMBtu on a 12-month rolling average). OAC 929a has since been revised to OAC 929b (issued April 12, 2013) for non-construction-related regulatory applicability and verbiage changes.

In Paragraph 24(a) of the Heater and Boiler Consent Decree, PSR agreed that all of its heaters and boilers that burn refinery fuel gas are affected facilities under NSPS Subpart J. As such, the NWCAA issued Compliance Order (CO) 07 on April 10, 2013 that deemed that Gas Oil Heater (1A-F4) and Atmospheric Charge Heaters (1A-F5 & 1A-F6) are affected sources under NSPS Subpart J and must comply with the applicable requirements.

Vacuum Charge Heater (1A-F8): In late 1999, the vacuum tower (1A-C103) and associated vacuum tower heater (1A-F8) were replaced. This project triggered NSPS Subpart J as a fuel gas combustion device and NSPS Subpart GGG for equipment leaks. Construction related to this unit upgrade was approved by the NWCAA on June 17, 1999 under OAC 684. OAC 684 has since been revised to OAC 684b (issued May 3, 2010) for non-construction-related regulatory applicability and compliance demonstration changes.

3.2 Delayed Coking Unit (DCU)

The Delayed Coking Unit (DCU) converts vacuum residuum from the crude unit into fractions by thermal cracking and coking followed by steam stripping and fractionation. The heavy feed is first heated and then charged to large drums that provide the long residence time needed for thermal cracking and coking to proceed to completion. Cracked products from the coke drums are routed to the DCU fractionator while coked material remains behind as petroleum coke. The lighter cracked fractions are routed to the FCCU and Catalytic Polymerization Unit (POLY). Light to medium fractions such as the Coker Light Gas Oil (CLGO) and Delayed Coker Naphtha are sent to the HTU2 for further processing. Coker Heavy Gas Oil is sent to the FCCU as feedstock. The residual heavy material deposits as solid petroleum coke on the inside of the coke drum. For continuous operation, two drums are used: while one is online, high-pressure water is used to cut the deposited coke out of the other. Prior to cutting, the drum is cooled down using steam and water. Coke-cutting water is recycled using a pair of large settling tanks. Slop oil recovered from the drum is routed to slop oil recovery tanks located at the unit. Recovered oil is sent to the FCCU for processing. Various plant sludges can be charged to the DCU coke drums during the blowdown cycle. After the petroleum coke is removed from the drums it is stockpiled just east of the DCU. Most of the finished coke is loaded into covered trucks and hauled to the Port of Anacortes for loading onto marine vessels.

Major components at the DCU include the fractionator, heater, side strippers, accumulator drums, overhead compressor, deethanizer and debutanizer towers, and slop oil and sour water tanks. Operating temperatures range from ambient to 925°F. Operating pressures range from 0.5 to 450 psi. The high-pressure water cutter for removing coke from the coke drums operates at 3000 psi. Equipment and emissions units are identified in the process flow diagram below. The unit also has a number of components in heavy liquid service that can emit fugitive VOC and HAP emissions. Other activities that may result in emissions to the air are conducted periodically to properly operate and maintain the equipment.

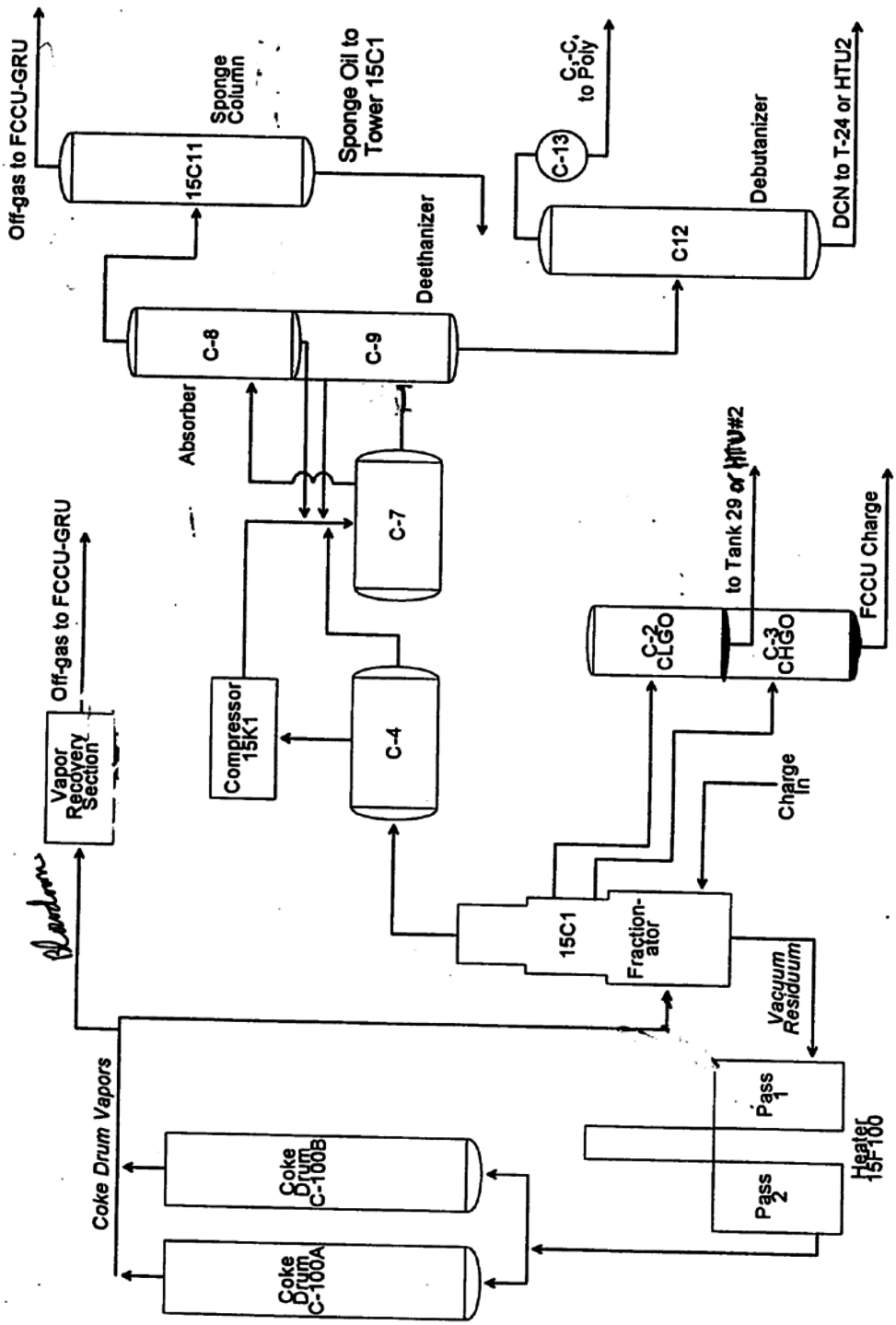

Delayed Coking Unit Simplified Flow Diagram

3-20

Construction History and Regulatory Applicability

The DCU was constructed in 1984 under OAC 275 issued by the NWCAA on February 10, 1983. This OAC was revised on May 26, 1995 (revision a) to remove a firing rate limit on charge heater 15F-100 and instead set a 39.5 tons NO_X per year limit and associated performance limit of 0.09 lb NO_X/MMBtu.

On September 30, 1997, the NWCAA issued OAC 628 for installation of a new burner in DCU Charge Heater 15F-100. OAC 628 was written to supersede OAC 275a. The new burner would increase the heater's firing rate capacity from 115 to 124 MMBtu/hour, which triggered NSPS Subpart J. On May 11, 1998, OAC 628 was revised (revision a) to include a light-ends recovery project at the DCU. The project triggered 40 CFR 60 Subpart QQQ requirements. OAC 628a has since been revised to OAC 628d (issued April 10, 2013) for non-construction-related regulatory applicability, compliance demonstration, and verbiage changes.

To address complaints regarding fugitive coke dust released during petroleum coke handling, the NWCAA issued Regulatory Order 14 that requires that all trucks hauling coke products to be covered and that the loading chute on the DCU coke hopper be modified to minimize coke free fall during loading. RO14 was revised to RO14a to remove deadlines that have passed.

3.3 Fluid Catalytic Cracking Unit (FCCU)

The FCCU is used to convert heavy oils into a wide range of more usable petroleum materials. The feedstock is generally heavy distillate or gas oil produced at VPS or DCU. The FCCU consists of a catalyst section and a fractionation section, which includes the Gas Recovery Unit (GRU).

The catalyst section contains the reactor and regenerator, which, together with the standpipe and riser, form the catalyst circulation portion of the unit. The FCCU uses blowers to aerate and circulate the small spherical-shaped silica-alumina catalyst in a manner that allows it to behave as a fluid.

As the catalyst comes into contact with the oil, the long-chain hydrocarbons are broken into a wide range of smaller-chain materials that are routed to the fractionation section of the FCCU. During this oil-catalyst reaction process, the catalyst accumulates carbon, called coke, that must be burned-off in the regenerator to reactivate the catalyst. This process of cleaning the catalyst generates sulfur dioxide due to the sulfur content of the coke. In addition, the regenerator can produce carbon monoxide (CO) depending on whether the unit is operating in full or partial combustion mode. In a partial combustion mode, the flue gases from regeneration contain large amounts of CO that must be combusted prior to release to the atmosphere. These flue gases are routed into two CO Boilers where combustion takes place to convert the CO to CO_2. The CO Boilers and wet gas scrubber (WGS) cannot be bypassed (the bypass stack was removed in March 2009). The combustion process produces heat for steam generation in the boilers. The boilers also have the capacity to burn supplemental gaseous fuels (i.e., refinery fuel gas) for additional steam production. The CO Boilers cannot fire solid or liquid fuels.

Particulate emissions are generated as the catalyst is degraded into smaller particles as a normal process in the FCCU. Primary catalyst removal occurs in the regenerator section in internal cyclones. A combined WGS, installed in 2005 replacing the electrostatic precipitator (ESP), is used as a control device to remove particulate matter and sulfur dioxide. The WGS is a non-venturi jet-ejector design.

As mentioned above, the fractionation section of the FCCU receives cracked hydrocarbon material from the reactor section. The cracked materials enter a fractionating column that separates the feed into naphtha and distillate streams. These are separated and routed to tankage or to the Hydrotreating Units for desulfurization. Fractionator bottoms (heavy oils) are used as ship fuel (bunker fuel). Light molecular weight materials are routed to the Gas Recovery Unit (GRU) section of the FCCU where C3-C4 materials are separated out and routed to the ALKY and POLY units for further processing. The C1-C2 materials are routed to the refinery's main fuel gas mix drum for distribution to combustion units throughout in the refinery.

Major components at the FCCU include the feed surge drums, air blowers, reactor, regenerator, main fractionator column, air compressors, CO Boilers, the WGS, and waste heat steam generators. Operating temperatures range from ambient to 1,375°F. Operating pressures range from –5 to 600 psi. Equipment and emissions units are identified in the process flow diagram below. The unit also has a number of components in heavy liquid, light liquid, and gaseous service that can emit fugitive VOC and HAP emissions.

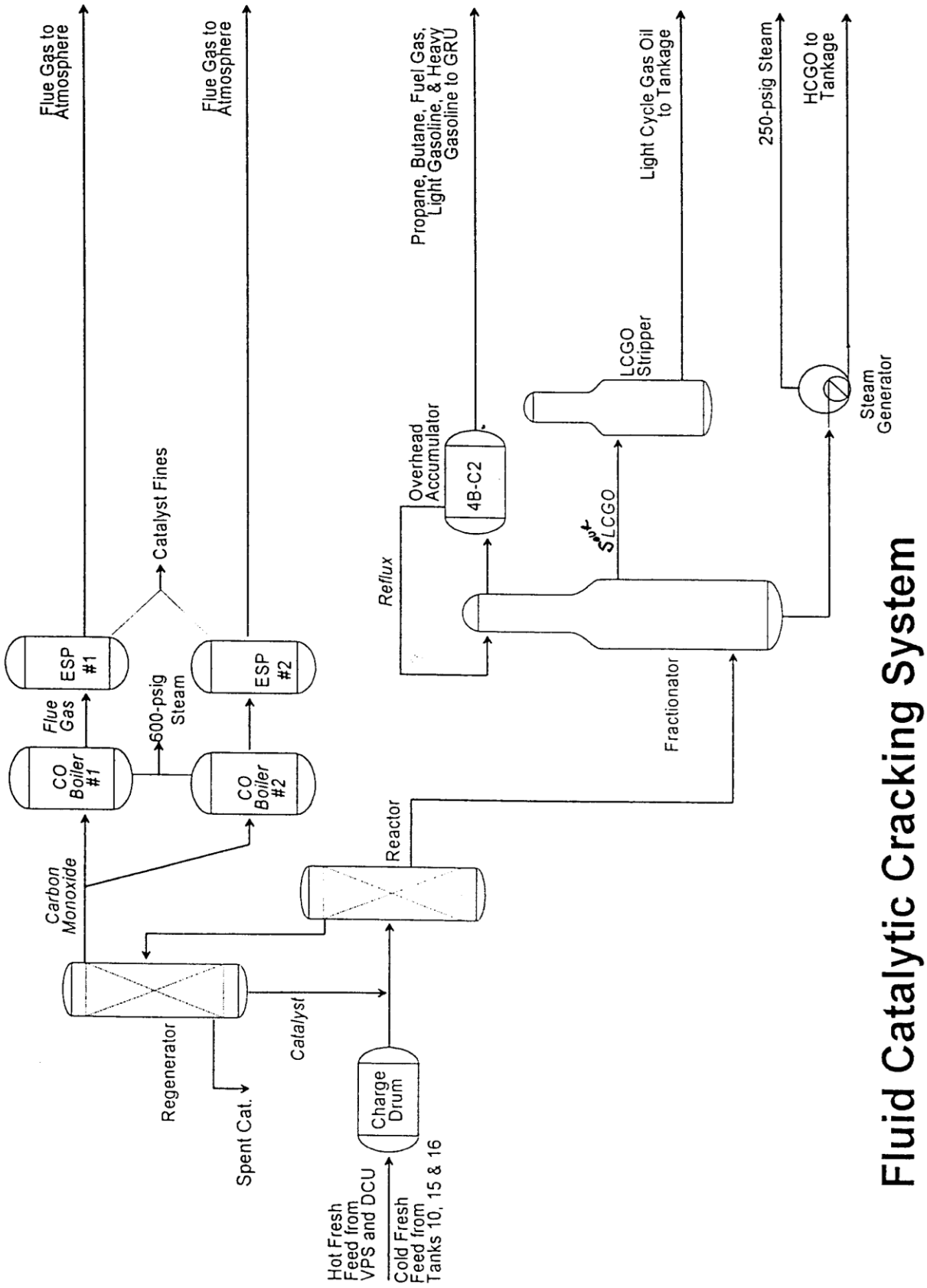

Fluid Catalytic Cracking System

Construction History and Regulatory Applicability

The FCCU has a complex history of construction, modification and associated air permitting activity. OAC 623f currently represents the only valid applicable approval order for the FCCU. All others were either temporary in scope or have been superseded by more recent approval orders. The table below summarizes construction and permitting activity for the FCCU in chronological order.

Date Approved	Approval	Description
1958	Grandfathered	Original FCCU construction
July 19, 1972	OAC 74 (narrative)	Octane Improvement Project: Construct CO Boiler 2, CRU2, HTU2, ALKY2, East Flare, Tank 19
April 11, 1985	OAC 300	Construct new fresh catalyst feed hopper at FCCU
September 19, 1988	OAC 246	FCCU modification
July 29, 1993	OAC 361	Construct ESPs on CO Boilers
March 18, 1994	OAC 361a	Ammonia injection in ESPs
June 13, 1995	OAC 361b	Removed requirement to establish a minimum catalyst feed rate, add requirement to establish a maximum sulfur dioxide mass emission limit
April 10, 1996	OAC 361c	Require H_2S instead of TRS monitoring of sulfur content of refinery fuel gas
February 23, 1998	OAC 623	FCCU vertical riser modification
June 17, 1999	OAC 623a	Add PSD avoidance limits and establish offsets. Add references to Compliance Assurance Monitoring (CAM) and remove NSPS Subpart QQQ applicability
July 9, 1999	OAC 704	Install 3 portable temporary diesel fired air compressors and diesel fuel tank for one year.
June 6, 2000	OAC 704a	Extend temporary approval from one year to 15 months.
July 8, 2003	OAC 623b	Substantial replacement of CO Boiler 1 tubes. Add a PSD-avoidance fuel gas firing rate limit and prohibit burning liquid fuel and sour water stripper gas (SWSG). Remove SO_2 monitoring requirement at FCCU regenerator.
January 5, 2005	OAC 623c	Replace ESP with a wet gas scrubber (WGS). Remove: flue gas recirculation (FGR), DESOX catalyst, CEM on regenerator. Incorporated QQQ applicability. Undo changes in modification b due to postponement of boiler tube replacement.
April 8, 2010	OAC 623d	Delete one-time tasks. Clarify: testing requirements, applicability of NSPS Subpart J, opacity test method. Remove terms the refinery in now incapable of.
July 12, 2012	OAC 623e	Incorporate changes required due to Consent Decree. Update formatting, make report timing consistent with AOP requirements. Delete reference to bypass stack. Incorporate FCCU fresh catalyst hopper baghouse.
January 30, 2014	OAC 623f	Clean up OAC, extract out Consent Decree requirements to be handled in a Compliance Order

This table is included in this SOB to provide a brief history of the complex permitting surrounding the FCCU. This SOB only addresses in detail permitting events since the issuance

of the last AOP (dated September 24, 2004). Please see the SOB associated with the previous AOP for further detail regarding the historical permitting actions.

On April 11, 1985, the NWCAA issued OAC 300 for a new fresh feed catalyst hopper with a cyclone at the FCCU. It was determined that the cyclone was not adequate to control emissions. PSR is using a baghouse to control fresh catalyst hopper emissions; the baghouse requirements were incorporated into OAC 623e (issued July 12, 2012) and OAC 300 was superseded.

The FCCU, including the regenerator, and CO Boilers are potentially subject to 40 CFR 60 Subpart J (CO Boilers as fuel gas combustion devices and FCCU regenerator) and 40 CFR 63 Subpart UUU (catalytic cracking units). FCCU regenerators are potentially subject to particulate matter, opacity, CO, and SO_2 requirements under NSPS Subpart J. The PSR FCCU regenerator has been modified pursuant to NSPS and therefore triggered the NSPS Subpart J requirements for particulate matter, opacity, and CO but not for SO_2. In Paragraph 47(a) of the Equilon Consent Decree, PSR agreed that the FCCU regenerator is an affected facility for SO_2 under NSPS Subpart J. As such, the NWCAA issued Compliance Order (CO) 10 issued on February 12, 2014 that deemed that the FCCU regenerator is an affected source for SO_2 under NSPS Subpart J and must comply with the applicable requirements.

Pursuant to 40 CFR 60.104(b)(1), FCCU catalyst regenerators with add-on control devices have a choice to comply with either a 90% SO_2 reduction or a 50 ppmvd SO_2 at 0% O_2 emission standard on a 7-day rolling average, whichever is less stringent. OAC 623f Condition 7 and CO 10 Condition V.A requires that the FCCU WGS (i.e., the FCCU catalyst regenerator) meet, among other standards, a 50 ppmvd SO_2 concentration standard as well. As such, PSR has chosen to meet the concentration standard rather than the percent reduction limit.

As a petroleum refinery that is a major source for HAPs, PSR's catalytic cracking unit is subject to the requirements of 40 CFR 63 Subpart UUU as an NSPS source. Subpart UUU has requirements to limit emissions of organic HAP (CO as surrogate) and metal HAP (PM and opacity as surrogate).

The FCCU is equipped with a wet gas scrubber. The high moisture content in the WGS flue gas prevents the use of a continuous opacity monitoring system (COMS) as required for demonstrating compliance with the opacity standards under both 40 CFR 60 Subpart J and 40 CFR 63 Subpart UUU. On August 3, 2005, EPA approved PSR's request for an Alternative Monitoring Plan (AMP) to allow monitoring of the liquid flow rate and gas flow rate for the WGS and calculation of the liquid-to-gas ratio rather than installation of a COMS to demonstrate compliance with the opacity requirements under 40 CFR 60 Subpart J and 40 CFR 63 Subpart UUU. EPA revised this AMP at PSR's request on December 28, 2007 to determine the liquid flow rate using a continuous flow meter rather than calculated as a function of the discharge pressure of the slurry pump. As stated in this AMP, excess opacity emissions for both 40 CFR 60 Subpart J and 40 CFR 63 Subpart UUU are based on a 3-hour rolling basis.

To calculate the lb PM per 1000 lb coke burn-off, Subpart J and Subpart UUU require that the catalyst regenerator exhaust be measure using a flow meter upstream of the CO Boilers. However, 40 CFR 63.1573(a) offers two alternatives for measuring the flow rate. PSR is measuring the inlet air flow rate to the catalytic cracking regenerator and continuously monitoring the carbon monoxide, carbon dioxide, and oxygen in the catalytic cracking regenerator exhaust to perform a material balance calculation that complies with (a)(2).

Fuel gas combustion devices are potentially subject to SO_2 requirements under NSPS Subpart J. The PSR CO Boilers triggered NSPS Subpart J requirements for SO_2 and must therefore comply with the NSPS fuel gas requirements.

CAM Plan: As discussed above, the FCCU WGS is subject to an AMP to monitor liquid-to-gas (L/G) ratio in the scrubber to demonstrate compliance with the opacity standards in NSPS J and MACT UUU. This compliance demonstration can also demonstrate compliance with the State opacity standard. A minimum L/G ratio threshold was set during the initial WGS compliance test establishing the threshold needed to maintain compliance (compliance is based on a minimum

value – a higher L/G ratio will provide better efficiency). An alarm is set at the minimum L/G ratio, which will alert personnel to perform corrective action.

The strategy for compliance monitoring proposed in the CAM Plan in SOB Appendix A to demonstrate continuous compliance with the grain per dry standard cubic foot (gr/dscf also referred to as grain loading) PM_{10} limits is to rely upon the opacity liquid-to-gas ratio continuous monitoring. Due to the nature of the wet gas scrubber exhaust, setting the minimum L/G threshold for the AMP based on visible emissions was impossible so PSR set the minimum based on the gr/dscf limit.

The information in the CAM Plan was incorporated into the AOP terms in the MR&R column including descriptions of "excursion" and "exceedance" events, as appropriate. An excursion is a departure from an indicator range established for monitoring consistent with the averaging period specified for the monitoring. An excursion does not necessarily indicate that a permit limit has been exceeded and includes periods when significant periods of data collection are missed. An exceedance is an incident when emissions limits have been surpassed. In the case of the nature of the monitoring and averaging periods for the gr/dscf limits at the FCCU WGS, excursions are defined as the same as exceedances and the permit terms are written as such. That is, when the L/G ratio drops below the minimum L/G ratio set at the original source test (i.e., 0.93 gpm/mscfh on a 3-hour average), it is an exceedance of both the opacity limits and the gr/dscf PM_{10} emission limits.

Note that the OAC-mandated annual source tests have demonstrated compliance with both the gr/dscf PM_{10} emission limits and the lb/1000 lb coke burn-off limit. This testing allows for annual verification that the L/G monitoring set-point meets the emission limitations.

Pursuant to 40 CFR 64.6(c), the AOP Term mandates that the flow meters be maintained in accordance with the manufacturer's specifications. In addition, CAM mandates that the permit term mandate the data availability of the monitoring system; similar to the requirement for CEMS in NWCAA Appendix A, the data availability during the monitoring periods was mandated to be greater than 90%. Exceedances of the minimum L/G ratio threshold must be reported in accordance with the breakdown and upset reporting provisions under AOP Term 2.4.8. In addition, monitoring data must be reported similarly to CEMS monitoring data in accordance with AOP Term 2.1.11.

3.4 Catalytic Polymerization and Nonene Units

3.4.1 Catalytic Polymerization Unit

The Catalytic Polymerization Unit (POLY) consists of a treater section, a splitter section, reactor section, and product fractionation section. There are two treating sections – the unsaturated and saturated treater sections. The unsaturated treater section is charged with light feedstock that originates as a byproduct of cracking at the DCU and FCCU. This stream, which contains propane and butane as well as propylene and butylenes, also known as C3/C4 olefins, are first treated to remove reduced sulfur compounds (H_2S and mercaptans). This stream is then sent to the splitter section to separate C3s from C4s. The C4 olefins are sent to the Alkylation (Alky) Unit and the C3 olefins are primarily routed to the reactor section of the POLY. Part of the C3 stream may be routed to the Alky2 Unit if required for alkylate production or POLY reactor switches. The saturated treater section is charged with propane and butane from the CRU1, HTU1 and VPS for sulfur removal and then sent to the depropanizer in the

product fractionation section for separation into finished propane and butane. In the POLY's catalytic reactors, propylene (C3) is passed through a solid phosphoric acid catalyst bed. The reaction converts C3s into a long chain product called polymer gasoline. Finally, the polymer gasoline is sent to depropanizer and debutanizer fractionation towers to separate out propane and butanes before sending the polymer gasoline to the Nonene Unit. Poly gasoline may also be routed to tankage for finished product blending.

Major components at the POLY include the treating section, splitter tower, reactors, depropanizer and debutanizer towers. Operating temperatures range from ambient to 450°F. Operating pressures range from 1 to 550 psi. Other activities that may result in emissions to the air are conducted periodically to properly operate and maintain the equipment.

Construction History and Regulatory Applicability

The POLY was constructed during the 1976 Octane Improvement Project. The POLY was expanded as part of the 1999 Vertical Riser Project under OAC 623 (now OAC 623f). As such, it triggered 40 CFR 60 Subpart GGG.

The POLY is unique in that it does not have any process streams with HAP greater than 5% that would trigger Refinery MACT 1 requirements for fugitive equipment leaks. However, the POLY does have two streams that do qualify as Group 1 Miscellaneous Process Vents under Refinery MACT 1. The HAP content threshold for MPVs is lower than that for equipment leaks (20 ppm for MPVs versus 5% for equipment leaks).

Therefore, leaking components are monitored and repaired as required by NWCAA 580.8 and Subpart GGG. Since August 31, 1998, the facility has been operating the LDAR program under the standards set forth in NSPS 40 CFR 60 Subpart VV as required by NWCAA 580.8 and Subpart GGG.

3.4.2 Nonene Unit

The Nonene Unit produces nonene, a nine-carbon (C9) olefin compound that is used in the petrochemical industry. Poly gasoline from the POLY is used as feedstock for the Nonene Unit. In the Nonene Unit, the poly gasoline is separated and nonene and tetramer are recovered. Major components at the Nonene Unit include accumulator and stripper vessels, a railcar and truck loading rack, and three external floating roof tanks (80, 81 and 82). Because of the need to keep the nonene product from being contaminated, storage and transfer operations are conducted using equipment in dedicated nonene service.

Section 5 of the AOP includes specifically applicable regulations for the Nonene Unit. Because operations at the Nonene Unit fall into several functional groups, the process unit has been separated from the loading rack and storage tanks in the AOP. The nonene loading rack is listed under shipping & receiving and storage vessels listed under storage vessels.

Construction History and Regulatory Applicability

The Nonene Unit was constructed at the refinery in 1991 following issuance of Order of Approval 296 by the NWCAA on November 20, 1990. The project included three nonene storage tanks (Tanks 80, 81, and 82), fugitive components, truck rack and railcar loading, and oily water sewer drains. OAC 296 was revised to OAC 296a (issued April 12, 2013) to clarify federal rule applicability and add ongoing monitoring demonstration for railcar loading and storage tanks.

40 CFR 60 Subpart VV applies to equipment leaks in the synthetic organic chemical manufacturing industry (SOCMI). SOCMI units, for the purposes of Subpart VV, are those that produce, as intermediates or final products, one or more of the chemicals listed in 40 CFR 60.489, including nonene. As such, the Nonene Unit qualifies as a SOCMI unit under NSPS. However, note that nonene is not a listed chemical under the SOCMI regulations in the MACT (e.g., 40 CFR 63 Subparts F, G, and H – referred to collectively as the Hazardous Organic NESHAP (HON)); as such, the Nonene Unit is not considered a SOCMI unit under MACT so it is not subject to the HON.

Note that the revised definition of "process unit" that includes loading racks in Subpart VV has been stayed. The "process unit" definition reverts to the previous definition that excludes loading racks. As such, the nonene loading rack is not subject to LDAR requirements under Subpart VV. Also, the nonene process (including the loading rack) is not subject to the LDAR requirements under NWCAA 580.8 because it does not utilize butane or lighter hydrocarbons as a primary feedstock. See SOB Section 2.2.14 for further discussion.

The Nonene Unit separates out the C9 fraction via a distillation tower and nonene is a listed chemical under 40 CFR 60 Subpart NNN. However, the Nonene Unit does not have a vent stream that is released to atmosphere directly or indirectly. As such, the Nonene Unit is not subject to 40 CFR 60 Subpart NNN.

Because the Nonene Unit has a fairly pure feedstock and pure product, the unit does not handle materials with a HAP content large enough to trigger 40 CFR 63 Subpart CC (i.e., greater than 5% organic HAPs). As such, it is not subject to the equipment leak requirements or the overlap provision in 40 CFR 63.640(p).

However, the Nonene Unit initial feedstock (i.e., polymer gasoline) contains HAPs; therefore, the nonene product has the potential to contain one or more of the listed HAPs under Subpart CC. As such, the nonene storage tanks (Tank 80, 81, and 82) are subject to 40 CFR 63 Subpart CC Group 2 storage vessel requirements.

Also, an OAC limits the vapor pressure of the contents of the nonene storage tanks to less than 0.75 psia. As such, Tanks 80, 81, and 82 are not subject to 40 CFR 60 Subpart Kb or to NWCAA 560 and 580.3.

Construction of the nonene processing unit and nonene railcar and truck loading facilities involved the installation new drains. Even though the Nonene Unit is a SOCMI unit under NSPS, because the Nonene Unit is located in a petroleum refinery, 40 CFR 60 Subpart QQQ applies to the Nonene Unit drains.

3.5 Catalytic Reforming Units (CRU)

Catalytic reforming converts low octane naphthas into high-octane gasoline blending stocks. In reforming, straight-chain hydrocarbons and cyclo-paraffins are converted to aromatics by dehydroisomerization and dehydrogenation. The naphtha feed from the hydrotreating units is mixed with hydrogen (H_2), vaporized, and passed through a series of heaters and fixed bed reactors containing a platinum and rhenium bimetallic catalyst. The reactor effluent is sent to a separator where the pressure is reduced and the mixture cooled. Hydrogen and light hydrocarbons are separated from the higher molecular weight reformate, which is then fractionated. Hydrocarbon products for the CRUs are gas, LPG, and light and heavy platformate. The platformate product stream is routed to gasoline blending. A byproduct of reforming is hydrogen gas. This excess hydrogen is sent to the HTUs for use in hydrotreating.

Major components at the CRU1 include heaters, reactors, compressor, product separator, absorber tower, debutanizer tower, rerun tower and caustic wash drum. Operating temperatures range from ambient to 980°F. Operating pressures range from 100 to 450 psi. One compressor (6DK1) is considered in hydrogen service.

Major components at the CRU2 include heaters, reactors, a compressor, high and low pressure separators, low-pressure flash drum, stabilizer tower, platformate splitter tower, and C3/C4

splitter tower. Operating temperatures range from ambient to 980°F. Operating pressures range from 150 to 400 psi. One compressor (10PK101) is considered in hydrogen service.

Both units also contain a number of components in heavy liquid, light liquid, and gaseous service that can emit fugitive VOC and HAP emissions. Other activities that may result in emissions to the air are conducted periodically to properly operate and maintain the equipment. Note, however, there are no CRU bypasses.

Both CRU1 and 2 are semi-regenerative. The CRU catalyst is regenerated approximately once every year. During depressuring and purging, they use the flare for control. Internal caustic scrubbing is used to control HCl emissions during coke-burn off and catalyst regeneration.

Construction History and Regulatory Applicability – CRU1

CRU1 was built with the original refinery construction in 1958. No significant modifications to the unit occurred until 1987 when all three of the original heaters were replaced with three new heaters having a common stack (Charge Heater (6D-F2), Interheater #1 (6D-F3) and Interheater #2 (6D-F4)). OAC 321 was issued by the NWCAA for this project on April 3, 1987. Based on this construction date, the heaters triggered 40 CFR 60 Subpart J as fuel gas combustion devices.

During NSR, BACT for SO_2 was determined to be equivalent to NSPS Subpart J, refinery fuel gas not to exceed 162 ppm H_2S based on a 3-hour rolling average. Compliance was to be demonstrated using a CEM to continuously monitor H_2S in the fuel gas to assure that the limit was not exceeded. In a July 7, 1988 approval letter, the NWCAA allowed PSR to monitor H_2S in the refinery's main fuel gas drum. However, upon investigation it was found that CRU1 and HTU1 run co-dependently and that most of the fuel gas combusted in these units is generated from within the CRU1/HTU1 units themselves. Because fuel gas from the CRU1/HTU1 is not being routed to the refinery's main fuel gas drum, monitoring H_2S at that location was not considered representative of fuel gas being combusted at CRU1/HTU1.

On September 29, 1991, the NWCAA issued OAC 286 for construction of two new heaters with a common stack at HTU1 (7C-F4/F5). As Condition 4 of this order, the refinery was required to install a H_2S CEM at the fuel gas drum that specifically services the CRU1/HTU1. On September 10, 1991, OAC 286 was amended to allow PSR to install a SO_2 monitor instead of the H_2S CEM as originally planned. This change was facilitated with the amendment of Subpart J published on October 2, 1990 (55 FR 40175). The amended Subpart J allowed SO_2 monitoring of the heater exhaust gas in lieu of monitoring H_2S in the fuel gas and established an equivalency between 20 ppm SO_2 in the heater exhaust to 162 ppm H_2S in the fuel gas. The federal amendment was made in response to challenges encountered in H_2S monitoring at that time.

Fortunately, installation of a SO_2 CEM at the HTU1 heater allowed the refinery to address the issue of monitoring NSPS Subpart J compliance with the fuel gas quality standards for the three new CRU1 heaters (6D-F2, 6D-F3 and 6D-F4). Because co-dependent CRU1/HTU1 units have a dedicated fuel gas mix system separate from the rest of the refinery, PSR was able to declare that SO_2 emissions at the HTU1 heater stack (7C-F4/F5) are indicative of those at CRU1 heater stack (6D-F2/F3/F4) thereby allowing the use of a single monitoring point to demonstrate compliance with the NSPS standard. This alternative monitoring strategy is allowed under 40 CFR 60.105(a)(3)(iv).

It should be noted that, in the rare and short-term event that the HTU1 is shut down while CRU1 continues to operate, there would be no SO_2 monitoring data to show compliance with Subpart J requirements. Because the CRU1 is operated with a catalyst bed that is poisoned by sulfur, only hydrotreated products having an extremely low sulfur content can be processed at the CRU. As a result, there would be little chance that the fuel gas generated at the CRU would have a H_2S content of concern. The lack of SO_2 data that results from an HTU1 shutdown would be acceptable as long as it did not exceed the data acquisition criteria of NWCAA's Appendix A. If the loss of monitoring data exceeded the criteria in the appendix, it would be reported as an AOP monitoring deviation.

In May 26, 1995, OAC 321 revision "a" was issued to allow more operational flexibility for the three CRU1 heaters. This flexibility was afforded by removing a maximum firing rate limit on the heaters and instead relying on a 39.9 tons per year annual NO_X emission limit and monthly reporting to assure that the PSD trigger of 40 tons was not exceeded. During NSR it was determined that PTE for all other pollutants were below PSD thresholds. On December 21, 1987, the 6D-F2, 6D-F3, and 6D-F4 common heater stack was source tested for NO_X emissions resulting in 8.14 lb NO_X /hour. Based on this source test the cumulative PTE for the three heaters is 35.63 tons per year and therefore below the 39.9 tons per year limit.

OAC 321b was issued on to incorporate applicability of NSPS Subpart GGGa due to Linde hydrogen plant project and add ongoing compliance demonstration for NO_X limit. This ongoing compliance demonstration is dictated by the future plans of the refinery for CRU1.

As discussed above, two of the primary purposes of CRUs are to generate hydrogen and create octane. With the advent of the mandate to use ethanol in gasoline, less octane is required to be directly generated from petroleum process itself. And with the construction of the neighboring hydrogen plant, the refinery has another source of hydrogen. As a result, PSR is shutting down a portion of CRU1, including the three heaters. However, there is a remote chance that once the unit is shutdown, it may need to be restarted again due to changes in the political climate or issues at the hydrogen plant. If a portion of CRU1 is shutdown, PSR has stated that it will be maintained in such a fashion that it could be restarted. If the heaters are shut down for more than two years, the heaters are considered to be permanently shutdown and will need to go through new source review and get a new permit to restart.

Because of this remote chance that the unit might restart, the AOP still addresses the CRU1 process unit in full, including requirements for heaters, vents, and equipment leaks. When PSR chooses to permanently shut down the portions of the CRU1, the AOP can be modified at that time to reflect the remaining operating portions of the CRU1 parsed out into the appropriate process units. PSR provided notification that the CRU1 heaters shut down on April 12, 2013.

During coke burn-off and catalyst rejuvenation, Subpart UUU limits the inorganic HAPs from the catalyst regeneration flue gas vent using both an emission limit and an operating limit. The emission limit is either a percent control or an outlet concentration value based on the type of catalytic reformer (e.g., semi-regenerating, cyclic, or continuous). The emission limit for CRU1 and 2 is 30 ppmvd corrected to 3% oxygen. The operating limit is an operating parameter value established during the initial performance test.

As discussed above, CRU1 utilizes an internal scrubbing device to control HCl emissions during regeneration. As such, PSR is required to use colorimetric tube sampling system (i.e., Draeger tubes) to periodically measure the HCl concentration during regeneration to be averaged together to create a daily average. The operating limit is set using Equation 4 in 63.1567(b)(4)(iii), using the emission limit, the average from the Draeger tube testing during the initial performance test (or 1 ppmv, whichever is greater), and the tested HCl concentration in ppmvd corrected to 3% oxygen (or 1 ppmv, whichever is greater).

$$C_{HCl,ppmv\ Limit} = 0.9 C_{HCl,AveTube}\left(\frac{C_{HCl,RegLimit}}{C_{HCl,3\%O2}}\right)$$

The initial performance test took place on October 3 and 7, 2005, the source testing and the Draeger tube testing for both CRU1 and 2 all ended up less than 1 ppmv; so each parameter in the equation was set equal to 1 ppmv. Assuming these values, the operating limit is 27 ppmv.

Excluded Conditions: OAC 321b Condition 5 requires notification of initial startup of the added process equipment components (i.e., valves and pumps) due to the hydrogen plant project within 15 days after startup. PSR provided notification that the project commenced operation on March 10, 2013. This is a one-time requirement that has been completed and is not included in the AOP.

OAC 321b Condition 6 requires notification of the shutdown date of the CRU1 heaters within 15 days after shutdown. According to the PSR notification, the CRU1 heaters were shut down on April 12, 2013. As such, this portion of Condition 6 has been completed and is not included in the AOP.

Construction History and Regulatory Applicability – CRU2

CRU2 was constructed as part of the 1976 Octane Improvement Project, which included Charge Heater (10H-101), Interheater #1 (10H-102), Interheater #2 (10H-103), and Stabilizer Reboiler (10H-104). Since original construction, there have been no significant modifications that would require NSR.

However, PSR worked on Interheater #2 (10H-103) in around 1985. As part of this project, a low-NO_X burner was voluntarily installed. None of the other CRU2 heaters were modified. A construction permit was not issued for this project.

In Paragraph 24(a) of the Heater and Boiler Consent Decree, PSR agreed that all of its heaters and boilers that burn refinery fuel gas are affected facilities under NSPS Subpart J. As such, the NWCAA issued Compliance Order (CO) 07 on April 10, 2013 that deemed that all four CRU2 heaters are affected sources under NSPS Subpart J and must comply with the applicable requirements.

The light platformate section of CRU2 is regulated under a specialized LDAR program in accordance 40 CFR 61 Subpart J (Benzene NESHAP). However, the overlap provisions under 40 CFR 63.640(p) allows that equipment leaks subject to both 40 CFR 63 Subpart CC and other programs under 40 CFR 60 or 61 promulgated prior to September 4, 2007 need only comply with the Subpart CC requirements.

3.6 Alkylation Units (Alky)

In the Alky units, low molecular weight olefins (C3/C4) are combined with isobutane using sulfuric acid as a catalyst in the reaction. The hydrocarbons and acid are mixed in a reactor called a contactor. Following reaction, the acid is separated from the resultant emulsion in a settler and the acid is returned to the contactor. The resulting product is called crude alkylate. The crude alkylate is treated with caustic to remove impurities such as trace acid, organic sulfates, and sulfonates. The treated crude alkylate is then fractionated to separate C4 and lighter hydrocarbon from the finished alkylate. The final alkylate is a high-octane and low RVP gasoline blending component.

General Chemical operates a sulfuric acid production plant located just east of the refinery under its own AOP. PSR trucks spent acid from the Alkylation Unit to General Chemical for regeneration.

Major components at the Alky1 include contactors, settlers, depropanizer, debutanizer, deisobutanizer, refrigeration compressor, and caustic washes. Operating temperatures range from –32 to 400°F. Operating pressures range from –5 to 200 psi.

Major components at the Alky2 include contactors, settlers, refrigeration compressor and four fractionators. Operating temperatures range from –32 to 400°F. Operating pressures range from 0 to 200 psi.

The Butadiene Hydrogenation Unit (BHU) is co-located at Alkylation Unit 1 and acts as a feedstock pre-treater for Alky1. The BHU hydrogenates butadiene compounds that are found in

the alkylation unit feedstock that originates from the FCCU. Hydrogenating butadiene in the feedstock is beneficial because then less sulfuric acid is required during alkylation processing.

Construction History and Regulatory Applicability

Alky1 was built with the refinery in 1958. On July 12, 2004, NWCAA issued OAC 887 for the installation of a spare steam-driven flare drum pump at the Alky1 flare drum. The only expected emission increase was due to fugitive components subject to NSPS Subpart GGG, MACT Subpart CC, and enhanced LDAR. OAC 887a was issued on January 30, 2014 to clarify the leak detection and repair requirements.

Alky2 was constructed during the 1976 Octane Improvement Project and has had no significant NSR modifications since original construction. As a grandfathered unit, there are no applicable OACs for this process unit. However, the Alky2 includes both process vents and fugitive components and is subject to MACT Subpart CC requirements.

The BHU was constructed during the summer of 2001 and began operation on November 13, 2001. OAC 772 was issued for this unit on May 24, 2001, revised as OAC 772a on March 18, 2004, and revised again to OAC 772b on March 20, 2009. The OAC requires that an enhanced LDAR program be implemented at the BHU consistent with NSPS 40 CFR 60 Subpart VV standards (by reference through NSPS Subpart GGG and MACT Subpart CC) as modified with lower leak definitions as BACT.

3.7 Hydrotreating Units (HTU1, 2 & 3), Isomerization Unit, and Benzene Reduction Unit

3.7.1 Hydrotreating Units (HTU1, 2, & 3)

Hydrotreating Units 1 and 2 are charged with distillates and naphthas. HTU1 feed originates from the VPS whereas feedstock for HTU2 (which includes straight run and cracked feedstocks) originates from the VPS, FCCU and DCU. HTU3 treats gasoline products, mainly from the FCCU, prior to blending into final product. In general, hydrotreating removes unwanted sulfur and nitrogen contaminants from petroleum hydrocarbons. During the process, hydrocarbons are reacted with hydrogen under high pressure and in the presence of a catalyst. Hydrogen sulfide driven off in the reaction is treated and sent to the SRU via the amine system. Desulfurized hydrocarbon products are distilled to produce low octane naphtha, jet fuel, and diesel. The naphtha products from the HTU also serve as high quality feedstocks for the CRUs.

Major components at the HTU1 include the feed surge drum, heaters, reactor, high and low pressure separators, fractionator tower, JET and heavy straight run (HSR) sidecut strippers, fractionator overhead drum, and debutanizer. Operating temperatures range from ambient to 620 °F. Operating pressures range from ambient to 475 psi. Two compressors (7CK1 & 7CF2) are considered in hydrogen service.

Major components at the HTU2 include the feed surge drum, heaters, reactors, high pressure separator, low pressure flash drum, H_2S stripper tower and accumulator, fractionators and accumulator, HSR sidecut stripper, and a treating section for light hydrocarbons. Operating temperatures range from ambient to 710 °F. Operating pressures range from ambient to 1000 psi. Three compressors (11PK101, 11PK102A, & 11PK102B) are considered in hydrogen service.

The third HTU was designed and built to remove sulfur from gasoline products (primarily cracked gasoline streams from the FCCU) thereby allowing the refinery to comply with future

federal low sulfur gasoline standards. HTU3 uses a series of catalyst beds inside distillation columns to treat gasoline grade feedstocks sent over from the FCCU. The catalytic distillation process is specifically designed and operated to remove sulfur from the feed stock while minimizing the octane reduction normally resulting from saturating olefinic compounds prevalent in FCCU gasoline. As with the other HTUs, HTU3, for the most part, will generate most of the fuel gas needed to operate the combustion furnace in the unit. Any make-up fuel will be supplemented on an as-needed basis with gas from the refinery's main fuel gas mix drum or with purchased natural gas.

Major components of the HTU3 include the feed drum, CDHDS naphtha splitter and reflux drum, CDHDS tower and reflux drum, reboiler furnace, CDHDS hot and cold separators, H_2S stripper tower and reflux drum, polishing reactor, polishing reactor hot and cold separators, naphtha splitter and reflux drum, recycle gas amine absorber, and vent gas amine absorber. One compressor (60K201) is considered in hydrogen service.

Construction History and Regulatory Applicability – HTU1

HTU1 was built with the refinery in 1958. The three original heaters were replaced in 1991 with two new heaters (7C-F4 and 7C-F5) having a common stack. The heater replacement project was approved by NWCAA on July 16, 1990 under OAC 286, which was modified in a letter from the NWCAA dated September 10, 1991 (referred to as OAC 286a). OAC 286b was issued on April 10, 2013 which updated the formatting, updated federal rule applicability, and added an ongoing compliance demonstration requirement. As a result of the construction date, heaters 7C-F4 and 7C-F5 triggered NSPS Subpart J.

OAC 286 set a BACT limit for NO_X of 0.07 lb NO_X/MMBtu. This term originally had an initial testing requirement that was completed on June 9, 1993 (0.063 lb NO_X/MMBtu). Once it was completed, that requirement was removed from the OAC, leaving this condition without any ongoing compliance demonstration. BACT limits require an ongoing compliance demonstration; as such, during the most recent modification, the NWCAA included a NO_X stack test that is required every five years.

Note that NO_X, CO, PM_{10} and VOC emission reduction credits were granted for permanently shutting down the three original heaters (7C-F1, 7C-F2 and 7C-F3). Some of these credits, along with credits acquired from a permanent shutdown of Erie City Utility Boiler #3 were used to offset emission increases from the construction of March Point Cogeneration Company's Phase I and II projects to keep the projects from triggering PSD permitting requirements. Because these ERCs are more than 10 years old, whatever ERCs remain have expired.

Construction History and Regulatory Applicability – HTU2

HTU2 was constructed during the 1976 Octane Improvement Project.

Charge Heater (11H-101): The Charge Heater (11H-101) has had no significant modifications that would require NSR since its original construction.

In Paragraph 24(a) of the Heater and Boiler Consent Decree, PSR agreed that all of its heaters and boilers that burn refinery fuel gas are affected facilities under NSPS Subpart J. As such, the NWCAA issued Compliance Order (CO) 07 on April 10, 2013 that deemed that Charge Heater 11H-101 is an affected source under NSPS Subpart J and must comply with the applicable requirements.

Stripper Reboiler Heater (11H-102) and Fractionator Reboiler Heater (11H-103): On November 16, 1997, OAC 630 was issued allowing PSR to install higher capacity, low NO_X burners in heaters 11H-102 (H_2S stripper) and 11H-103 (fractionator). The modification increased the combined maximum firing rate of the heaters from 230 MMBtu/hour to 241 MMBtu/hour. On March 4, 2004, OAC 630a was issued to address construction of the ultra low sulfur diesel (ULSD) project at HTU2. OAC 630b was issued on March 10, 2009 to clarify the applicability of the equipment leak and wastewater requirements. As a result of these projects,

HTU2 is subject to NSPS Subparts GGG and QQQ and heaters 11H-102 and 11H-103 triggered NSPS Subpart J. HTU2 is also subject to 40 CFR 63 Subpart CC. OAC 630c was issued on January 30, 2014 to move requirement to fire gaseous fuels to introduction, delete heater firing rate limit, clarify leak detection and repair requirements, and incorporate ongoing compliance demonstration with NO_X limit.

Construction History and Regulatory Applicability – HTU3

OAC 787 was issued January 20, 2003 for the construction of HTU3. Construction was completed in October 2003 with startup following shortly thereafter. The process unit includes a 95 MMBtu per hour Catalytic Distillation Technology Hydrodesulfurization (CDHDS) heater and associated hydrocarbon processing equipment.

In conjunction with the HTU3 project, PSR contracted with Air Liquide to construct a steam-methane reformer to supply hydrogen to the new hydrotreater. OAC 813 was issued to Air Liquide for their hydrogen plant on October 7, 2002 and provides the operating requirements for this separate facility. Although the facility is located within the boundaries of Puget Sound Refinery, it is permitted separately from PSR. It should be noted however, that because Air Liquide's hydrogen plant was constructed as a support facility for HTU3, the increased emissions from this plant were considered under in combination with the PSD analysis for HTU3.

Prior to completing construction of HTU3, OAC 787 was revised (revision a) to allow SO_2 emissions to be monitored using a stack CEM rather than a fuel gas H_2S monitor. In March 2004, the OAC was again revised (revision b) because the CDHDS heater could not consistently meet the 6 ppm SO_2 (24-hour average) limit specified in the OAC 787a. This problem occurs not because of high sulfur in the hydrotreater fuel gas, but because of the hydrogen-rich nature of fuel gas being generated at HTU3. This hydrogen-rich flue gas effectively concentrates the SO_2 in the stack due to the fact that no CO_2 is produced during hydrogen combustion. The resulting combustion products are much lower in volume than for carbon-based fuel gas (methane, ethane, etc.).

OAC 787b issued on March 11, 2004, requires the CDHDS heater to meet a H_2S limit for fuel gas burned at the heater with these limits based on NSPS (162 ppm) limits and BACT (50 ppm). OAC 787c, issued on March 10, 2005, lengthens the averaging time for the CDHDS heater rating due to variability in the heat content of the fuel gas resulting in a 12-month rolling average limit (62.2 MMBtu/hr) and an hourly average limit (124.4 MMBtu/hr). OAC 787d, issued May 25, 2005, increased the CDHDS heater rating with a 12-month rolling average limit of 95 MMBtu/hr and a 124.4 MMBtu/hr hourly limit. On April 17, 2009, the NWCAA issued OAC 787e to clarify the applicability of equipment leak and wastewater stream requirements.

Excluded Conditions: OAC 787e Condition 7 requires that emissions from the project not cause an exceedance of acceptable source impact levels specified in WAC 173-460-150 and -160 as determined by methods specified in WAC 173-460-080. Compliance with this condition shall be demonstrated upon request by the NWCAA. This analysis was conducted and compliance was demonstrated at initial permitting; as such, this is a one-time requirement that was completed and is not included in the AOP.

3.7.2 Isomerization Unit and Benzene Reduction Unit

The EPA regulation Mobile Source Air Toxics Rule 2 (MSAT2), published February 26, 2007, places limits on the benzene content of gasoline, both reformulated and conventional. As of January 1, 2011, refiners had to meet an annual average benzene content standard of 0.62 vol% in gasoline. At PSR, the reformate streams are the largest contributors to the overall benzene content in gasoline, contributing 60 to 70% of the total benzene. The Benzene Reduction Unit (BRU) separates out benzene and benzene precursors, thereby reducing benzene in gasoline produced at PSR.

The BRU decyclohexanizer (DCH) column prefractionates the combined HTU1 and HTU2 Heavy Straight Run (HSR) feeds into a C5-C6 light straight run (LSR) naphtha stream and a heavy

straight run (HSR) naphtha stream. The DCH LSR streams contain most of the benzene and benzene precursors (methylcyclopentane and cyclohexane) and are routed to the Isomerization (ISOM) Unit for further processing. The DCH HSR stream is routed to the CRUs and, because the benzene precursors have been removed, no longer contributes to the benzene levels in the final CRU reformate product that is used in gasoline blending.

The ISOM Unit (also referred to as the ParIsom™), located on the HTU1/CRU1 Unit, receives the decyclohexanizer (DCH) overhead streams along with light naphtha from the HTU1 and HTU2 debutanizer bottoms and hydrogen from the CRU1. First, the feed is routed to the Benzene Saturation (BenSat) Unit to saturate the benzene and benzene precursors. The stream is then cooled to control the temperature to the inlet of the section to the isomerization reactor. The paraffins in the feed are then isomerized to increase the octane content. Downstream of the isomerization reactor, the effluent is cooled prior to flowing to the isomerization product separator. Excess hydrogen gas is removed from the reactor effluent in the separator and recycled back to the process while liquid product is routed to the isomerization stabilizer. The high octane bottoms product (Isomerate) from the stabilizer is cooled prior to being routed to tankage for gasoline blending.

In addition to the DCH column, the HTU2 Debutanizer column was installed as part of the BRU project for pretreatment of the HTU2 LSR stream. The debutanizer tower removes butane, H_2S, and water from the HTU2 LSR stream. The H_2S and water are contaminants to the ISOM catalyst and the butane is removed to reduce the volumetric load on the ISOM unit. The bottoms of the debutanizer column, the pretreated LSR, is routed to the ISOM for benzene/benzene precursor removal. The HTU1 LSR naphtha stream is also a feed stream to the ISOM and is pretreated for butane, H_2S, and water removal through the existing HTU1 Debutanizer column. Figure 4 is a process flow diagram of the ISOM and BRU.

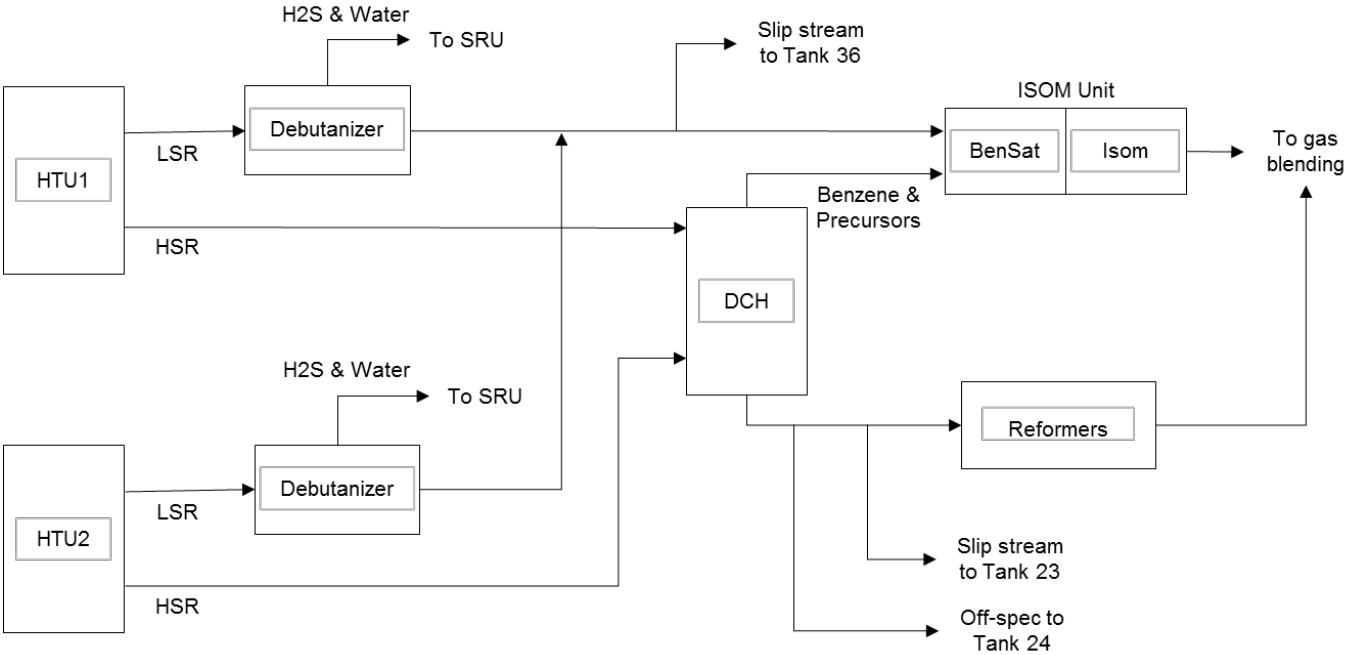

Figure 4 ISOM & BRU Process Flow Diagram

Major components at the ISOM Unit include two fractionation columns, two catalytic reactor vessels, one charge drum, one separator vessel, two overhead accumulation drums, associated heat exchangers, and the replacement of an existing accumulator drum with a larger drum. Heat for the ISOM Unit is provided by steam; no new heaters were installed as part of the ISOM Unit.

The BRU consists of a single large fractionation column, the DCH column, with ancillary equipment including a charge drum, accumulator drum, thermosiphon reboiler, fin-fan condensers and rundown cooler, heat exchangers, pumps and a flare knock out drum. The HTU2 Debutanizer column and ancillary equipment was also installed as part of the BRU.

Construction History and Regulatory Applicability

Note that the highest benzene content stream in the refinery is the feed into the BenSat Unit, with a 5.5 wt% benzene. Because this is less than the 10 wt% applicability threshold, 40 CFR 61 Subpart J does not apply.

In 2004, OAC 883 was issued for the construction of the ISOM Unit. The only source of emissions in the ISOM Unit is fugitives from components (i.e., valves, pressure relief valves, pumps, flanges, and sample stations). The ISOM Unit is subject to NSPS Subpart GGG, NSPS Subpart QQQ, and MACT Subpart CC. The ISOM must also comply with BACT for equipment leaks as enhanced LDAR requirements. The Isom Unit began operation on January 19, 2006.

PSR submitted an application for OAC 883a to remove the reference to 40 CFR 60 Subpart QQQ, which PSR states that does not apply due to the overlap provisions in 40 CFR 63 Subpart CC. The NWCAA denied this modification because the overlap provisions state that, should a stream be subject to both Subpart QQQ and Subpart CC, the source need comply with Subpart CC, not that Subpart QQQ does not apply. OAC 883b was issued on January 30, 2014 to clarify the leak detection and repair requirements.

On July 22, 2009, the NWCAA issued OAC 1045 for the construction of the Benzene Reduction Project (BRP), which included the decyclohexanizer (DCH) column and the HTU2 debutanizer. The project triggered 40 CFR 60 Subpart GGGa for equipment leaks, 40 CFR 60 Subpart QQQ for process drains, and is subject to 40 CFR 63 Subpart CC for equipment leaks.

Excluded Conditions: 40 CFR 63 Subpart CC (63.640(p)) includes overlap provisions for equipment leaks. The version of Subpart CC at the time of OAC 1045 issuance (May 25, 2001) stated that equipment leaks that are subject to Subpart CC and to 40 CFR parts 60 and 61 are required to comply only with Subpart CC. As such, even those equipment leaks subject to potentially more stringent 40 CFR 60 or 61 requirements in the future (e.g., 40 CFR 60 Subpart GGGa promulgated November 16, 2007) must only comply with Subpart CC. The NWCAA believed that the BRP should comply with the more stringent requirements in Subpart GGGa regardless of the overlap provisions in Subpart CC; hence, OAC 1045 Condition 1 was written to that effect. However, Subpart CC was modified on October 28, 2009 to include a statement that equipment leaks subject to Subpart GGGa shall comply with Subpart GGGa. As such, OAC 1045 Condition 1 is no longer necessary and is not included in the AOP.

OAC 1045 Condition 2 requiring written notice of the completion of the Benzene Reduction Project is complete is not listed in the AOP because it is a one-time requirement that has been completed. The BRP started operation on April 5, 2011.

3.8 Sulfur Recovery Unit (SRU)

The Sulfur Recovery Unit (SRU) converts H_2S to liquid elemental sulfur. The H_2S enters the SRU in the amine acid gas (AAG) and sour water gas feeds. The gases are routed to the SRU via three amine regeneration units (ARUs) and three waste water stripper units (WWSs). The SRU reduces emissions to the atmosphere by converting the H_2S in the feed gas to elemental sulfur. This allows the refinery to process crude oil with a higher sulfur content into finished

products with a low sulfur content. The resulting liquid sulfur is sold as a commodity chemical product.

PSR has two parallel SRUs (SRU3 and SRU4) with capacities of 150 LTPD and 200 LTPD, respectively. Each SRU has its own tail gas treating unit (TGTU 1 and 2) and incinerator. SRU4 has a dedicated sulfur pit. The sulfur in the pit is then transferred to two sulfur storage tanks. SRU3 sulfur production is routed directly to the sulfur storage tanks. Each SRU can normally handle the full refinery sulfur load thereby improving the overall reliability of the SRU system and reducing acid gas flaring incidents. This allows the refinery to handle higher sulfur loads resulting from increased hydrodesulfurization of intermediate product streams to produce lower sulfur fuels as required by recent federal regulation.

In the Claus section, H_2S is partially converted to SO_2 through controlled, sub-stoichiometric combustion in the SRU thermal reactors. The H_2S and SO_2 then react to form elemental sulfur and water. The off-gas is cooled and the sulfur condenses to a liquid. The remaining gases are reheated and passed through a series of catalyst beds and condensers to increase the conversion to elemental sulfur. Conversion from H_2S to elemental sulfur in the Claus section of the SRU is about 98%.

In addition, the combined overhead vapor stream of the waste water strippers (located on the FCCU) is routed to the inlet of the thermal reactors on the SRU for the destruction of ammonia to nitrogen (N_2) gas. Any VOCs are also destroyed and the sulfur compounds in the WWS vapor stream are converted to elemental sulfur. An approximate operating temperature of 2700°F is required to destroy the ammonia gas.

Any remaining H_2S and SO_2 gas leaving the Claus section is sent to the Tail Gas Treating Unit (TGTU) for final scrubbing. Here all remaining sulfur species are converted back to H_2S. This H_2S is then absorbed as it comes in contact with a MDEA (methyldiethanolamine) solution in the amine absorber. The absorbed H_2S creates a rich MDEA mixture that is regenerated using steam. At the MDEA regenerator, concentrated H_2S is liberated and the H_2S stream is sent to the SRU thermal reactors for reprocessing. Conversion from H_2S to elemental sulfur for the Claus section and TGTU combined is estimated at 99.99%. The gases leaving the absorber overhead contain small amounts of residual H_2S. These gases are combusted in incinerator stacks for full conversion to SO_2 before they are emitted to the atmosphere.

For contingency purposes, the main acid gas line to the SRU can be diverted to the flare system. Also, if necessary, the Claus section effluent can bypass the TGTU and go directly to the incinerator.

As part of the overall H_2S handling system, the refinery is equipped with a number of amine absorbers and regenerators to collect waste H_2S at various process units. Instead of using MDEA however, the amine system in the refinery uses a DEA (diethanolamine) solution. The lean DEA is circulated throughout the refinery and is used to absorb H_2S. There are ten H_2S absorbers located in the following areas.

Process Area	Lean MDEA H_2S Absorbing Towers
FCCU	2
POLY	2
HTU1	1
HTU2	2
HTU3	2
FGR	1

As the lean MDEA becomes saturated with H_2S it must be regenerated back to a lean state to regain its affinity for H_2S. There are three ARUs located adjacent to the POLY. The ARUs convert the rich MDEA into lean MDEA by driving H_2S out of solution by heating with steam. The concentrated H_2S acid gas is then routed to the SRU for control. All three ARUs operate on a continuous rich-lean header system that run in parallel and on a continuous cycle removing acid gases (H_2S) from sour gas and liquid streams. The operation of the ARUs is very similar to the operation of the TGTU at the SRU. Figure 5 is a process flow diagram of the amine treatment process.

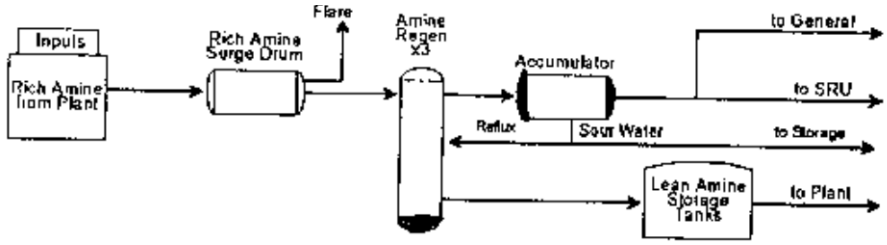

Figure 5 Amine Treatment Process Flow Diagram

Major components at the SRU include two thermal reactors, waste heat boilers, condensers, catalytic reactors, two incinerator stacks, quench tower, amine stripper tower, amine absorber tower, and a MDEA storage tank. Operating temperatures can reach 2700°F. Process operating pressures are generally below 5 psig. Steam generator pressures on the steam side can reach 600 psig.

Major components at the ARUs include a regeneration tower, overhead accumulator, rich amine surge drum, and lean amine storage tanks. Operating temperatures range from ambient to 400°F. Operating pressures range from 5 to 250 psi.

Construction History and Regulatory Applicability

On February 27, 1981, the NWCAA issued OAC 255 for the construction of two 25 long tons per day (LTD) Claus sulfur recovery units (Units 1 and 2). OAC 255a was issued on March 9, 1989 to allow an expansion of production of Units 1 and 2.

On June 17, 1999, the NWCAA issued OAC 693 for a modification to the SRU to add a third SRU train (SRU3), increasing facility production to 175 LTD. The modification is linked to the FCCU Vertical Riser Project (OAC 623c) in regard to the PSD netting analysis.

On May 5, 2003, NWCAA issued OAC 828 for the construction of SRU4. Construction of a new unit would improve the overall reliability of the SRU, reduce acid gas flaring, and allow the refinery to handle higher sulfur loads. OAC 828 superseded OAC 693 upon startup of the SRU4 on November 9, 2004. The existing Claus Units 1 and 2 were decommissioned on June 23, 2005, within twelve months of startup of the new unit.

OAC 828 was modified to OAC 828a (issued on April 17, 2009) to clarify sulfur pit emission operation, delete NO_X and CO emission limits (initial testing completed and compliance demonstrated, along with cleanup. OAC 828a is the only OAC currently applicable to the SRU.

Due to the construction dates, the SRU3 and 4 triggered 40 CFR 60 Subpart J both as fuel gas combustion devices because they use refinery gas as supplemental fuel and as Claus sulfur recovery plants. Note that OAC 828a Condition 1 limits supplemental fuel to natural gas except during periods of natural gas curtailment.

There are certain lines in the SRUs that have a VOC content greater than 10% by weight. As such, and due to the construction dates, the SRU3 and 4 triggered the LDAR requirements under 40 CFR 60 Subpart GGG. Also, because diethanolamine (DEA) is a listed HAP, there are lines in

the SRU with a HAP content greater than 5% by weight; therefore, the SRU is subject to the LDAR requirements in 40 CFR 63 Subpart CC.

Also, because OAC 828a Condition 6 applies to SO_2 emissions from the entire refinery, it is included in AOP Section 4 rather than the SRU portion of the AOP Section 5.

3.9 Utilities

The utilities area provides steam, cooling water, and electrical services to the refinery. The utilities area is divided into four sections: Erie City boiler, cogeneration units (including Cogen cooling tower), stand-by wharf generator, and refinery cooling towers.

3.9.1 Erie City Boiler

Erie City Boiler is rated at 390 MMBtu/hr, can fire natural gas and refinery fuel gas, and provides steam to refinery units. In addition, the Boiler House area (BOHO) provides operations with pneumatic air, boiler feedwater, fire water and service water. The Erie City Boiler is the only boiler operating in this process area. There are no emissions to the atmosphere released from steam use or from steam generation, or other emissions associated with combustion in the boiler. Three stationary reciprocating internal combustion engines (RICE) reside in the Boiler House area, which are discussed in SOB Section 3.12.

The Erie City Boiler was built with the original refinery construction in 1958. Since that time there have been no modifications to the boiler triggering NSR or NSPS requirements. It is noted that, another Erie City Boiler (#3) was permanently shut down as a condition of OAC 475. This shutdown allowed emission reduction credits to be granted for the construction of the Cogens thereby allowing the project to avoid PSD for NO_X under creditable offsets.

In Paragraph 24(a) of the Heater and Boiler Consent Decree, PSR agreed that all of its heaters and boilers that burn refinery fuel gas are affected facilities under NSPS Subpart J. As such, the NWCAA issued Compliance Order (CO) 07 on April 10, 2013 that deemed that the Erie City Boiler is an affected source under NSPS Subpart J and must comply with the applicable requirements.

3.9.2 Cogeneration Facility

Three General Electric Frame 6 cogeneration units (Cogens) built in 1990/1991 are nominally rated at 40 MW each which generate electricity for sale to the grid and steam for the refinery. Each turbine is equipped with a heat recovery steam generator (HRSG) with a 163 MMBtu/hr duct burner. The turbines generate 600 psi steam, approximately 300,000 pounds per hour of steam total. The units normally burn about a 70:30 mix of natural gas and refinery gas from the FCCU but also have the ability to burn propane, butane, aviation jet (avjet) fuel, and low sulfur distillate fuel. The duct burners can only fire natural gas or refinery fuel gas. Figure 6 is a simplified flow diagram of the Cogen fuel gas system.

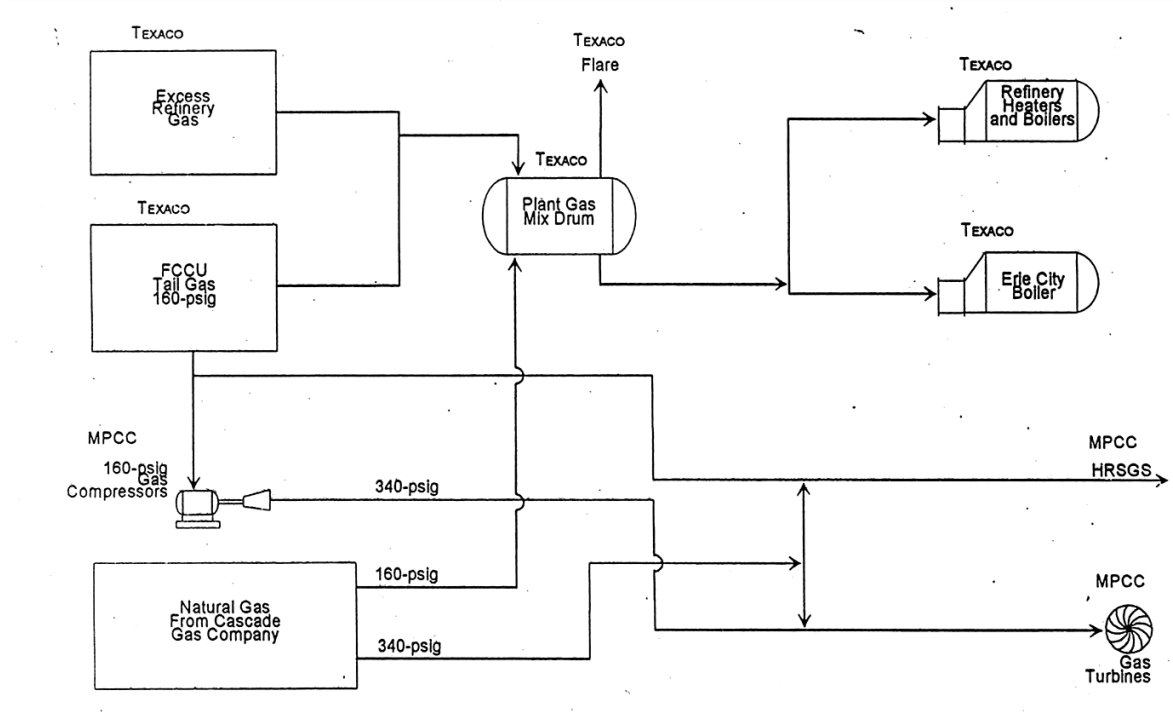

Figure 6 Cogen Fuel Gas Utility Simplified Flow Diagram

The cogeneration unit also includes a steam turbine and a cooling tower. The steam turbine receives excess 40 psi steam from the refinery and generates electricity for sale to the grid. The cooling tower was constructed for use by the cogens in 1990. Hexavalent chromium was never used in the cogen cooling tower; as such, the cogen cooling tower is not subject to 40 CFR 63 Subpart Q.

The turbines are equipped with steam injection and selective catalytic reduction (SCR) with ammonia injection for NO_X control. Sulfur dioxide is controlled by the selection of low sulfur fuels. Pipeline grade natural gas, propane, and butane are very low in sulfur. Aviation jet (avjet) and diesel fuels typically contain less than 0.05% sulfur by weight. The reduced sulfur compounds in the refinery fuel gas are reduced by means of an amine scrubbing system to meet the hydrogen sulfide concentration limits imposed for fuel gas combustion devices in 40 CFR 60 Subpart J. Particulates, carbon monoxide, volatile organic compounds (VOC's), and toxic air pollutants are controlled by the selection of clean burning fuels and maintaining good combustion.

Construction History and Regulatory Applicability

The facility was originally owned and operated by the March Point Cogeneration Company (MPCC). On February 1, 2010, Shell took ownership of the cogeneration units. Note that a change in ownership is not a trigger for NSPS; as such, even though the cogens may maintain potentially affected sources in refinery-specific NSPS (e.g., oily water sewers under Subpart QQQ and equipment leaks under Subpart GGG or GGGa), they did trigger the NSPS standards just due to the ownership change.

The facility was constructed in two phases. Phase 1 involved the construction of Cogens 1 and 2 (OAC 475 issued October 26, 1990). Commercial operation began in November of 1991.

OAC 475 did not initially require the installation of a selective catalytic reduction (SCR) system to control NO_x. There was some consideration that General Electric was developing a low NO_x system that could achieve similar NO_x reductions without the use of SCR with ammonia injection. Three years were granted to install equipment that would meet the final BACT

standard. Subsequently, an SCR system was installed instead of a low NO_x combustion system. The SCR system was installed in July of 1993. During the first three years of operation the NO_x limit was higher, and there was no requirement for ammonia injection. The original OAC 475 was revised in March 17, 1994 (OAC 475a) to impose more stringent NO_x limits and to establish a limit for ammonia emissions.

OAC 476 for Phase 2 was issued August 7, 1991. Phase 2 involved the construction of Cogen 3. Selective catalytic reduction was installed from the outset. Best Available Control Technology for NO_x was slightly more stringent for Phase 2 than Phase 1. Unit 3 began operation in December 1993.

Emission offsets from the permanent shutdown of Erie City Boiler 3 were used during the permitting of all three Cogens to avoid triggering PSD.

There have been several revisions to the original OACs for both phases to clarify ambiguous language, establish averaging periods, and establish exemptions from emission reporting during periods of startup and shutdown. OAC 475h (Cogens 1 & 2) and 476g (Cogen 3) (both issued April 12, 2012) are the most recent versions and are reflected in the AOP.

OAC 475h & OAC 476g Ammonia CEMS RATA: OAC 475h and 476g require that ammonia emissions from each stack be monitored using CEMS. Note that ammonia is a state toxic air pollutant and not a pollutant subject to federal requirements. The CEMS are required to be certified in accordance with 40 CFR 60 Appendix B and operated in accordance with 40 CFR 60 Appendix F, NWCAA 367, and NWCAA Appendix A. However, there is no Performance Specification for ammonia under 40 CFR 60 Appendix B; because ammonia is used to control NO_X, Performance Specification 2 for NO_X is used.

The Relative Accuracy (RA) in a NO_X RATA is the measure of accuracy of the CEMS operation and is defined as the sum of the absolute average difference between the Reference Method (RM) and the CEMS readings (|d|) and the 2.5% confidence coefficient (CC) divided by a certain value depending on the measured emissions relative to the standard. When emissions are greater than half of the standard, the denominator is to be the average of the RM values when emissions and the RA must be less than 20%. When emissions are less than half of the standard the denominator is to be the Emission Standard (ES) and the RA must be less than 10%. When emissions are extremely low (i.e., getting down into the noise), small variability in the CEMS readings from the RM can cause the RATA to fail. To address this, the NWCAA has approved a third option for the calculation of RA that is similar to that offered in Performance Specification 4A for CO. In this case, when emissions are less than half the standard (i.e., 5 ppm) as measured by the Reference Method, the RA is calculated only by adding (|d|) plus CC, and the RA must be less than 2 ppm. This option is gap-filled into the AOP.

OAC 475h & OAC 476g Opacity: Opacity emissions from the turbine stacks shall not exceed five percent (5%) for more than six minutes in any one hour period as determined by EPA Method 9. When the turbines are firing gaseous fuels, ongoing compliance with this standard is demonstrated using the general opacity monitoring listed in AOP Section 6.1.

The turbines are also allowed to fire liquid fuels (avjet and low sulfur diesel). PSR generally only fires liquid fuels in the Cogens for testing/maintenance and during natural gas curtailments. Because firing liquid fuels has the potential for more visible emissions and the fact that natural gas curtailments are rare and short-lived, the ongoing monitoring while firing liquid fuels is daily qualitative opacity observations. If visible emissions are observed, emissions shall be reduced to zero as soon as practicable. If emissions cannot be reduced to zero, PSR may monitor by EPA Method 9 no later than 24 hours after detection and daily thereafter until opacity is shown to be less than 5%. Otherwise visible emissions shall be considered in excess of the opacity standard. Note that the qualitative assessments are not required on days when oil burning is conducted solely for the purpose of testing or maintenance and does not exceed four hours per calendar month for each turbine.

40 CFR 60 Subpart Db Nitrogen Oxides Requirements – Duct Burner: The duct burner is subject to a NO_X limit of 0.20 lb/MMBtu on a 30-day rolling average (60.44b(a)(4)(i)). Initial compliance is demonstrated either with a performance test under 60.8 or use of a temporary CEMS for 30 days. The CEMS sampling site may be located at the outlet of the steam generating unit but the measured NO_X emissions shall be compared against the emission limit for the duct burner (60.46b(f)(2)).

For ongoing compliance, Subpart Db generally requires installation of a NO_X CEMS. However, duct burners subject to the NO_X limits are not required to install a NO_X CEMS or keep corresponding records (60.48b(h)). EPA Applicability Determination Index entries PS15 and 9700102 agree with this interpretation that only the initial compliance demonstration is required and no ongoing compliance demonstration is mandated. Because the initial compliance demonstration allows for a CEMS on the steam generating unit outlet to demonstrate compliance, the ongoing compliance demonstration for the purposes of the AOP is the NO_X CEMS on the turbine stack as required by OAC 475h and 476g.

40 CFR 60 Subpart GG Nitrogen Oxides Requirement – Emission Limit: The turbines are subject to 40 CFR 60 Subpart GG. Subpart GG contains a NO_X limit for subject turbines based on the following equation (40 CFR 60.332(a)(1)):

$$STD = 0.0075 \times \frac{14.4}{Y} + F$$

where:

STD = allowable ISO corrected (if required under 60.335(b)(1)) NO_X emission in percent by volume dry at 15% oxygen

Y = manufacturer's rated heat rate at manufacturer's rated load in kJ/W-hr

= firing gaseous fuels: 11.2 kJ/W-hr (10,560 Btu/kW-hr LHV)

F = NO_X emission allowance for fuel-bound nitrogen (referred to as an F-value)

ISO conversion under 60.335(b)(1) is optional because the units are equipped with add-on control technology – steam injection and SCR. PSR does not to correct for ISO standard conditions to determine compliance with the NO_X limit, which is consistent with the OAC limits as well.

According to 40 CFR 60.332(a)(3), sources may accept an F-value of zero or may determine an appropriate F-value through fuel sampling or manufacturer's analysis. PSR has chosen to accept an F-value of zero. If PSR chooses to utilize an F-value that is greater than zero, sampling would be required in accordance with 40 CFR 60 Subpart GG.

Assuming an F-factor of 0, the allowable NO_X concentration firing gaseous fuels is 96 ppmvd at 15% oxygen which is listed in the AOP. For units with CEMS, excess emission events, and hence the emission limits, are based on four-hour averages (40 CFR 60.334(j)(1)(iii)(A)).

The turbines are able to fire other fuels as well (e.g., propane, butane, avjet, low sulfur distillate). However, gaseous fuels are the primary fuels; the liquid fuels are used rarely and only as supplemental fuels so are not explicitly listed. The NO_X limits for the liquid fuels can be calculated using the NSPS equation if desired. In addition, note that the NSPS limits are significantly greater than the other limits imposed through new source review.

40 CFR 60 Subpart GG Nitrogen Oxides Requirements – Monitoring: 40 CFR 60 Subpart GG requires daily monitoring of the fuel nitrogen content if an F-value greater than zero is assumed (40 CFR 60.334(h)(2)). MPCC requested to EPA that they be excused from the daily monitoring of nitrogen content because they continuously monitor NO_X emissions using a CEMS. EPA Region 10 granted relief from this monitoring requirement in a letter dated October 19, 1992 contingent on the operation of the NO_X CEMS. However, since PSR is assuming an F-factor of zero, the daily monitoring is not required. As such, this requirement is not listed in the AOP.

40 CFR 60 Subpart J Sulfur Dioxide Requirement – Emission Limit: As fuel gas combustion devices, the turbines are subject to the 40 CFR 60 Subpart J SO_2 limit of 20 ppmvd at 0% O_2 on a 3-hr rolling average (40 CFR 60.105(a)(3)(iv)). Turbines generally operate at, and turbine-specific emission limits are to be corrected to, 15% oxygen. As such, for ease of compliance, this limit was converted to 15% oxygen as follows:

$$conc_A = conc_B \times \left(\frac{20.9 - A\%O_2}{20.9 - B\%O_2}\right)$$

where:

$conc_A$ = concentration (ppmvd) at A percent oxygen

$conc_B$ = concentration (ppmvd) at B percent oxygen

Therefore, 20 ppmvd at 0% O_2 is equivalent to 5.6 ppmvd at 15% O_2. The limit averaging period does not change. Note that this limit is more strict than the 3-hour limit mandated by BACT under new source review (i.e., OAC 475h and 476g).

40 CFR 60 Subpart GG Sulfur Dioxide Requirements – Monitoring: 40 CFR 60 Subpart GG requires periodic monitoring of the fuel sulfur content to demonstrate continuous compliance with the sulfur standard (40 CFR 60.334(i)). Because the Cogens regularly fire refinery fuel gas, which does not meet the definition of natural gas in the rule, the sulfur content of the refinery fuel gas must be determined and recorded daily. MPCC requested to EPA that they be excused from the daily monitoring of sulfur content because they continuously monitor SO_2 emissions using a CEMS. EPA Region 10 granted relief from this monitoring requirement in a letter dated October 19, 1992 contingent on the operation of the SO_2 CEMS.

LDAR: PSR took ownership of the Cogens on February 1, 2010; there was no need for a physical modification as part of this transition. As such, the Cogens became part of a "petroleum refinery" and potentially subject to all the rules that apply only to petroleum refineries. However, pursuant to 40 CFR 60.14(b)(6), a change in ownership does not qualify as a modification under NSPS; therefore, the Cogens did not trigger the LDAR requirements under 40 CFR 60 Subpart GGG or GGGa.

In addition, the Cogens fire both natural gas and a fuel gas stream off the FCCU; they are not engaged in petroleum refining to produce transportation fuels. As such, the Cogens do not qualify as "petroleum refining process units" under 40 CFR 63 Subpart CC so the Cogen equipment leaks are not an affected source. Also, no testing, monitoring, recordkeeping, or reporting is required for refinery fuel gas systems under 63.640(d)(5). Therefore, the Cogens are exempt from the LDAR requirements under 40 CFR 63 Subpart CC.

Cooling Tower: The Cogen cooling tower did not use chromium-based treatment chemicals as of August 12, 1993; therefore, it is not subject to 40 CFR 63 Subpart Q.

The cooling towers at the Cogen are used for boiler feedwater; the facility has no heat exchangers in organic HAP service (i.e., having at least 5 wt% of listed HAPs). As such, 40 CFR 63 Subpart CC for heat exchangers does not apply.

3.9.3 Cooling Towers

For the refinery, there are two wet cooling towers used to cool process water at the refinery by providing direct contact between the cooling water and the air passing through the towers. They are located just northwest of the SRU. The cooling water does not directly contact the process hydrocarbon stream, instead it is circulated through process unit heat exchangers where heat can either be added or removed from hydrocarbon products through the use of non-contact heat exchangers. The cooling towers can be a source of VOC emissions to the atmosphere if leaks develop in cooling water heat exchangers or condensers. Heat exchanger leaks are addressed in 40 CFR 63 Subpart CC.

Cooling Tower 1 was constructed during original refinery construction in 1958. Cooling Tower 2 was installed with the 1976 Octane Improvement Project. Pursuant to the heat exchanger requirements in 40 CFR 63 Subpart CC, hydrocarbon contamination is monitored in the riser pipe in each cooling tower. This requirement is addressed in the AOP under each process unit that maintains subject heat exchangers rather than under the cooling towers.

Hexavalent chromium was originally used as a biological growth inhibitor in the cooling water but was phased out from use by PSR in the 1980s. As such, the refinery cooling towers are not subject to 40 CFR 63 Subpart Q.

3.10 Receiving, Pumping, and Shipping

Often referred to as RP&S, Receiving, Pumping and Shipping is broken down into six specifically regulated areas within the refinery:

- Gasoline/Diesel Truck Loading Terminal
- Diesel Railcar Loading Rack
- Nonene Truck and Railcar Loading Rack
- Ethanol Unloading and Storage
- Marine Terminal
- Propane/Butane Railcar Load Rack (LR-2) & LPG Truck and Railcar Loading Rack (LR-3)
- Coke loading

Coke loading activities are specifically regulated under a regulatory order (RO 14a). Because these operations are located at the DCU, they are listed in the AOP and the SOB under the DCU.

3.10.1 Gasoline/Diesel Truck Loading Terminal

The gasoline/diesel truck loading terminal has a dispensing rack with the capacity to load up to four cargo tanks at a time which was part of the original refinery construction in 1958. In 1993, the rack was upgraded to add automated loading controls and lock-out systems and, in accordance with NWCAA 580.4, retrofitted with a control device to control the emissions of gasoline vapors displaced during loading. Originally in OAC 380 (dated August 17, 1992), PSR proposed to use a carbon absorption system; however, PSR decided to install a John Zink (ZTOF) Vapor Combustion Unit as the control device (OAC 380a dated April 30, 1993). The ZTOF unit is supplied with natural gas as an auxiliary fuel. OAC 380b has since been revised to OAC 380c (issued April 10, 2013) for non-construction-related regulatory applicability and verbiage changes.

There are a number of overlapping regulations that apply to the gasoline/diesel truck loading terminal. These include: NWCAA 580.4 because the terminal loads more than 7,200,000 gallons of gasoline annually, WAC 173-491-040(2) because the terminal loads more than 7,200,000 gallons of gasoline annually and is located in an ozone attainment area, and 40 CFR 60 Subpart XX because the terminal was modified after December 17, 1980. In addition, as of 1998, Refinery MACT 1 regulations apply a modified version of 40 CFR 63 Subpart R for gasoline terminals. Also, for those loading terminals that are subject to both 40 CFR 60 Subpart XX and Refinery MACT 1, they need only comply with the Refinery MACT 1 requirements. As such, specifically applicable regulations cited in the AOP only include those in Subpart R that are specifically called out as applicable in 40 CFR 63.650 (Subpart CC). Note that Subpart R references requirements in Subpart XX.

Because the Gasoline/Diesel Truck Loading Terminal contains or contacts material that is at least 5 percent by weight total organic HAP, it is subject to the equipment leak provisions in 40 CFR 63 Subpart CC. In addition, the truck rack is also potentially subject to 40 CFR 60 Subpart GGG. However, the Subpart GGG definition of process unit does not include loading racks as

affected sources; therefore, the load rack is not subject. Note, that the truck rack must also comply with the monthly visual inspection required under 40 CFR 60 Subpart XX. This visual inspection allows the use of sight, smell and audio clues to find leaks.

40 CFR 63 Subpart CC, via reference to 40 CFR 63 Subpart R (National Emission Standards for Gasoline Distribution Facilities [Bulk Gasoline Terminals and Pipeline Breakout Stations]), makes a distinction between "thermal oxidizers" and "flares". A thermal oxidizer is defined as "a combustion device used to mix and ignite fuel, air pollutants, and air to provide a flame to heat and oxidize hazardous air pollutants. Auxiliary fuel may be used to heat air pollutants to combustion temperatures." A flare is defined as "a thermal oxidation system using an open (without enclosure) flame." Because the ZTOF unit utilizes an enclosed flame that has a stack where it can be tested, EPA considers it to be a thermal oxidizer and it must be regulated as such, including monitoring firebox temperature under 40 CFR 63.427(a)(3) (see the preamble to the modification to 40 CFR 63 Subpart R in 68 FR 70962).

PSR conducted vapor combustor source tests on October 15, 2009 and October 18, 2011 pursuant to 40 CFR 63.425(b)(1) during which the firebox temperature was continuously monitored. Based on these testing data, the minimum firebox temperature was 85°F on a 5-minute block average. Automatic interlock devices are in place to prevent loading unless appropriate thermal oxidation temperatures are met and to assure that the tanks loaded all have a valid leak tighten test certification on record. Note that all cargo tanks are assumed to be in non-dedicated service and therefore displaced vapors are controlled whether loading gasoline or diesel.

Because the vapor combustor combusts hydrocarbon gas generated at the refinery and was built after June 11, 1973, it was determined that the truck rack vapor combustor is a fuel gas combustion device subject to 40 CFR 60 Subpart J. Additionally, in Paragraph 24(a) and Attachment 2 of the Heater and Boiler Consent Decree, PSR agreed that the truck rack vapor combustor is an affected facility under NSPS Subpart J with a compliance date of December 31, 2001.

To demonstrate compliance, PSR submitted an alternative monitoring plan to EPA for monitoring SO_2 emissions from the thermal oxidizer to show compliance with 40 CFR 60 Subpart J requirements, which was approved on December 4, 2001.

3.10.2 Diesel Railcar Loading Rack

On February 5, 2001 the NWCAA issued OAC 757 for construction of a diesel railcar loading rack. OAC 757 has since been revised to OAC 757a (issued March 20, 2009) for non-construction-related regulatory applicability, compliance demonstration, and verbiage changes.

Because the Diesel Railcar Loading Rack does not contain or contact material that is at least 5 percent by weight total organic HAP, it is not subject to the equipment leak provisions in 40 CFR 63 Subpart CC. In addition, the railcar rack is also potentially subject to 40 CFR 60 Subpart GGG. However, because of the Subpart GGG definition of process unit, loading racks are not affected sources; therefore, the load rack is not subject. As such, the Diesel Railcar Loading Rack does not have any LDAR requirements.

Excluded Conditions: OAC 757a Condition 4 that requires the Diesel Railcar Loading Rack meet ambient air toxics requirements in accordance with WAC 173-460 is not listed in the AOP because a screening analysis was completing during NSR and therefore there is no on-going requirement.

3.10.3 Nonene Loading Rack

On November 20, 1999, the NWCAA issued OAC 296 for construction of a nonene processing unit, nonene storage and loading rack. Because the nonene processing, storage, and loading are all located in different areas of the refinery, the nonene processing and storage are listed in different parts of the AOP. OAC 296 has since been revised to OAC 296a (issued April 12, 2013)

for non-construction-related regulatory applicability, compliance demonstration, and verbiage changes.

As discussed above, the Nonene Loading Rack is potentially subject to 40 CFR 60 Subpart VV as a SOCMI unit. However, because of the Subpart VV definition of process unit, loading racks are not affected sources; therefore, the load rack is not subject. Also, because the Nonene Loading Rack does not contain or contact material that is at least 5 percent by weight total organic HAP, it is not subject to the equipment leak provisions in 40 CFR 63 Subpart CC. As such, the Nonene Loading Rack does not have any LDAR requirements.

3.10.4 Ethanol Unloading and Storage

On July 22, 2009, the NWCAA issued OAC 1046 for construction of an ethanol unloading and storage project to allow blending of ethanol into gasoline during loading into trucks. This project included an internal floating roof storage tank (Tank 85) and installation of new and repurposing existing fugitive components. Because the storage tank is located at the gasoline truck rack, the entire ethanol unloading and storage project is considered part of RP&S and addressed in AOP Section 5.10.4.

Because this project included only an ethanol storage tank and associated fugitive components, it is not considered part of a refinery production unit. As such, it is not considered part of a "process unit" under the current definition and is not subject to the LDAR requirements under 40 CFR 60 Subpart GGGa. The inclusion of Subpart GGGa in the nonbinding introduction of OAC 1046 is incorrect.

Due to the construction date, size, and a vapor pressure greater than 0.75 psia, the ethanol storage tank is subject to 40 CFR 60 Subpart Kb. However, because the ethanol vapor pressure is less than 1.5 psi, it is not subject to NWCAA 560/580.

In addition, although the ethanol is denatured using 5 wt% gasoline or natural gasoline, the denaturant is not all HAP. As such, the Ethanol Unloading and Storage project is not subject to the LDAR requirements under 40 CFR 63 Subpart CC. Therefore, the Ethanol Unloading and Storage unit is not subject to LDAR requirements.

With natural gasoline or unleaded gasoline as the denaturant, the denatured ethanol storage tank contains or contacts one or more of the HAPs listed in Table 1 of 40 CFR 63 Subpart CC (e.g., benzene, toluene). As such, it is subject to 40 CFR 63 Subpart CC storage tank requirements. Because the denatured ethanol does not have an annual average HAP liquid concentration greater than 4%, Tank 85 is considered a Group 2 storage vessel.

Excluded Conditions: OAC 1046 Condition 2 requires written notification of completion of the Ethanol Unloading and Storage project within 15 days after completion. PSR provided notification that the project commenced operation on July 6, 2010. This is a one-time requirement that has been completed and is not included in the AOP.

3.10.5 Marine Terminal

The marine terminal was constructed with the original refinery in 1958 and there have been no modifications since that time triggering NSR. As such, no OACs or NSPS regulations apply to the marine terminal.

Because the marine terminal is 0.5 miles or more from shore, it is exempt from 40 CFR 63 Subpart Y requirements, including LDAR, but, pursuant to 63.560(d)(6), must meet the submerged fill requirements under 40 CFR 153.282. Because the marine terminal does not meet the applicability criteria of Subpart Y, it is not subject 40 CFR 63 Subpart CC for marine loading or LDAR.

3.10.6 Propane/Butane Railcar Load Rack (LR-2) & LPG Truck and Railcar Loading Rack (LR-3)

The Propane/Butane Railcar Load Rack and the LPG Truck and Railcar Loading Rack were built with the refinery in 1958 and there have been no modifications since that time triggering NSR. Generally, handling propane is a non-regulated activity so there are no specifically applicable regulations that apply. However, NWCAA 580.8 requires an LDAR program for components handling VOC at process units and loading sites which utilize butane or lighter hydrocarbons as a primary feedstock. The affected process units are alkylation, polymerization, and LPG loading. As such, the Propane/Butane Railcar Load Rack and the LPG Truck and Railcar Loading Rack are subject to the LDAR requirements under NWCAA 580.8.

Note, however, that the current version of NWCAA 580.8 (amended March 13, 1997) includes the LPG loading process unit. The version of the rule included in the SIP (December 13, 1989) states that affected process units are alkylation, polymerization, and light ends units, which excludes LPG loading. As such, the NWCAA 580.8 term in the AOP for LPG loading only includes the State only version of the rule and does not reference the federal version in the SIP.

3.10.7 Fixed Roof Tank 64

Tank 64 is a 7,600 gallon fixed roof tank that stores Nalco 5300 stabilizer oil additive used in fuel blending. This tank is not subject to another MACT and this material is considered an organic liquid under Subpart EEEE. As such, this tank is an affected source under Subpart EEEE.

Because this tank and stored material do not meet any of the criteria in Table 2 to Subpart EEEE, it is not subject to control; however, there are recordkeeping and reporting requirements. Subpart EEEE requires an initial compliance report – PSR submitted the initial notification on June 3, 2004.

3.11 Flares

Three elevated flares (East [primary], North, and South) are used to combust waste gases at the refinery. The East Flare is the primary flare; the North and South Flares serve as backups. When the system pressure gets high enough, the stream overcomes the individual water seals and is routed to the North and/or South flare. All are located northeast of the refinery's process unit area. Generally, due to the Flare Gas Recovery (FGR) system installed in 2006, flaring volumes have been reduced to low or non-existent except during process unit startups, shutdowns and upsets.

Each of the three flares are equipped with steam injection at the flare tip to create the turbulence needed to enhance mixing of flared hydrocarbon gases with ambient air for better combustion. Additionally, the primary East flare has a smokeless "Peabody" tip installed in the late 1980s. The amount of steam injected is based on an automated steam-to-feed target. If necessary for certain periods of time, additional steam can be manually added by operators.

If done properly, visible emissions from flaring are kept below 20%. However, high flare loading can cause smoking, especially if steam injection rates are not properly adjusted. A mass flow meter located on the flare line combined with a video camera directed at each flare tip assists operators in making proper adjustments to the steam injection rate during flaring to avoid visible emissions.

As part of the Hydrocarbon Flaring Study under the Equilon Consent Decree, PSR constructed the flare gas recovery (FGR) unit to recover liquid and gaseous hydrocarbons to reduce the amount of gas flared. As part of this project, the gases will be treated in the DCU amine absorber tower to reduce sulfur content prior to reuse; as such, refinery sulfur emissions will decrease. This sulfur collected from treatment is routed to the existing SRU.

The FGR Unit consists of five compressors rated at approximately 60 mscfh each, two separator vessels, a fin-fan cooler, and an amine absorber tower.

Construction History and Regulatory Applicability

The North and South Flares were constructed as part of the original refinery in 1958. The primary East Flare was constructed as part of the Octane Improvement Project in 1972.

The FGR project was permitted under OAC 918 issued June 9, 2005. The FGR project began operation on June 27, 2006, prior to the December 31, 2006 Consent Decree deadline. The FGR project is subject to NSPS Subpart GGG and MACT Subpart CC for equipment leaks and NSPS Subpart QQQ and MACT Subpart CC for process drains. OAC 918 has since been revised to OAC 918a (issued April 8, 2010) to allow excess clean hydrogen to bypass the FGR along with non-construction-related regulatory applicability, compliance demonstration, and verbiage changes. OAC 918b was issued on January 30, 2014 to clarify the leak detection and repair requirements.

A design analysis was completed on the flares and submitted to the NWCAA as part of the source's Refinery MACT 1 Initial Notification of Compliance Status Report submitted January 1999. The report satisfied the initial performance test requirements for each flare in accordance with 40 CFR 60 Subpart A (60.18) and 40 CFR 63 Subpart A (63.11). The analysis was required because the refinery uses the flares as control devices for Refinery MACT 1 Group 1 process vents and for control of leaks from pump seals regulated under Refinery MACT 1 equipment leaks in HAP service.

The BTU content of flare gases have been checked periodically; however, due to safety reasons, there is no on-going requirement written in the AOP for sampling. Based on engineering judgment, the most likely source of low BTU gas would come from the CRUs due to the high hydrogen content of the waste gas generated there.

As part of Equilon Consent Decree negotiations, Shell accepted that the flare system at PSR has been modified and, as such, is subject to 40 CFR 60 Subpart J as a fuel combustion device. The compliance date for the PSR flare system to come into compliance was December 31, 2012. However, 40 CFR 60 Subpart Ja was promulgated with flare requirements on June 24, 2008. With the construction of the Benzene Reduction Project, the flare system was modified and thereby triggered Subpart Ja on April 5, 2011. Note that because the flare was subject to Subpart J prior to triggering Subpart Ja, it must comply with the Subpart Ja H_2S standards upon modification. However, the compliance date for the flare management plan and root cause analysis requirements is not until November 11, 2015.

A sweet hydrogen stream bypasses the flare gas recovery system but is combusted in the flare (see OAC 918a). This excess hydrogen stream is generated when the hydrogen generators (i.e., catalytic reforming units [CRUs], isomerization unit [ISOM]) make more hydrogen than the hydrogen consumers (i.e., hydrotreating units [HTUs]) can use. However, this stream does enter the flare system upstream of the flow and sulfur monitors; therefore, it does not bypass the sulfur monitoring and does not need to be addressed as an inherently low sulfur stream under NSPS Subpart Ja.

The East Flare is equipped with an H_2S CEMS to demonstrate compliance with the Subpart Ja H_2S limits. It is also equipped with a total sulfur monitor that is used to determine compliance with the WAC 173-400-040(6), NWCAA 462 (1,000 ppmvd at 7% O_2), and OAC 918b Condition 1. The CEMS are located on the primary East Flare downstream of the split to the North and South flares. As such, PSR requested and EPA granted an Alternative Monitoring Plan (AMP) on March 22, 2011, which has been revised on August 21, 2012 and January 10, 2014, to allow the H_2S CEMS data from the East Flare to be representative of each flare operating at that time for determining compliance with 40 CFR 60 Subpart Ja. In addition, when the East Flare, and hence the CEMS, is out of service, PSR shall use engineering judgment and existing data to determine H_2S emissions from the North and/or South Flares.

3.12 Internal Combustion Engines

3.12.1 Control Room #2 Generator (30LEG2), BOHO Firewater Pump (33PGE3), BOHO Firewater Pump (33PGE14), & BOHO Firewater Pump (33PGE15)

The Control Room #2 Generator (30LEG2) provides support during power outages for the #2 Control Room. The three BOHO Firewater Pumps are used to pressurize the refinery firewater system which services the entire refinery. The refinery firewater system provides pressurized water to fight fires but the system is also used for general maintenance, such as washing pads down, and fire training.

As can be seen in SOB Table 2-2, these four compression-ignition engines are in emergency service, were installed prior to June 12, 2006, and are rated at less than 500 hp; as such, these four units are subject to the same requirements under 40 CFR 63 Subpart ZZZZ and are grouped together in the AOP. They are not subject to any NSPS requirements.

Note that this regulatory analysis assumes that the engines are in emergency service as defined in 40 CFR 63 Subpart ZZZZ and discussed in SOB Section 2.2.11. This definition allows for limited operation in non-emergency service. Should PSR choose to operate them otherwise, these engines would be subject to other requirements.

Also, it is assumed that the engines are not used for emergency demand response or voltage/frequency deviations. Should PSR choose to use the engines for either of these purposes, additional requirements will become applicable.

Most MACT standards require an initial notification under 40 CFR 63.9. However, because these RICE are existing emergency units, these RICE are exempt from the initial notification requirement pursuant to 63.6645(a)(5).

3.12.2 Stand-by Wharf Generator (30LEG5)

On February 27, 2002 the NWCAA issued OAC 797 for the construction of a 500 kW (755 hp) emergency stand-by electrical generator to serve as backup power in the event of an electrical power disruption. This effort to assure reliability for marine terminal operations will reduce the potential for oil spills. The generator was installed and started operation on November 26, 2002. The OAC limits the number of operating hours which enabled the unit to meet the air toxics in accordance with ch 173-460 WAC. The OAC also limits opacity to 5% and fuel to ultra-low sulfur diesel.

There are no applicable NSPS requirements to this engine, but 40 CFR 63 Subpart ZZZZ, the NESHAP for reciprocal internal combustion engines (RICE), applies. As an existing emergency stationary RICE with a site rating greater than 500 hp at a major source of HAP emissions, pursuant to 40 CFR 63.6590(b)(3), this engine is not required to comply with 40 CFR 63 Subpart ZZZZ or the General Provisions under 40 CFR 63 Subpart A, including the initial notification requirements. The engine is subject to 40 CFR 63 Subpart ZZZZ but has no requirements; therefore, 40 CFR 63 Subpart ZZZZ is not listed in AOP Section 5.

Note that this regulatory analysis assumes that the engine is in emergency service as defined in 40 CFR 63 Subpart ZZZZ and discussed in SOB Section 2.2.11. Should PSR choose to operate it otherwise, this engine would be subject to other requirements.

Also, it is assumed that the engine is not used for emergency demand response or voltage/frequency deviations. Should PSR choose to use the engines for either of these purposes, additional requirements may become applicable.

OAC 797 Condition 1 lists the opacity standard for the generator. Because this generator is a late model engine, designed to provide efficient operation such that visible emissions are not expected. As such, the compliance demonstration is maintenance in accordance with the manufacturer's specifications.

Excluded Conditions: OAC 797 Condition 4 stating that the NWCAA shall be notified in writing of the generator installation date within 30 days of completion is not listed in the AOP because it is a one-time condition that has been completed.

3.12.1 Main Control Room Emergency Generator (30LEG6) & Radio Tower Emergency Generator (30LEG7)

The Main Control Room Emergency Generator was installed in 2008. Because of this installation date, it is assumed to be a model year 2007 or more recent. It is rated at 237 hp and has a cylinder displacement of 6.8 liters/cylinder. As a diesel emergency generator that operates for less than 500 hours per year, it is exempt from New Source Review requirements under NWCAA 300.4(i).

The Radio Tower Emergency Generator was installed in 2013. It is a 2013-model-year 2.6-liter engine rated at 50 kW. As a diesel emergency generator that operates for less than 500 hours per year, it is exempt from New Source Review requirements under NWCAA 300.4(i).

The Main Control Room Emergency Generator and the Radio Tower Emergency Generator are considered "new" units under 40 CFR 63 Subpart ZZZZ since they were constructed after June 12, 2006. As stationary compression ignition internal combustion engines that were manufactured after April 1, 2006 and commenced construction after July 11, 2005, these RICE are also subject to 40 CFR 60 Subpart IIII. 40 CFR 63 Subpart ZZZZ provides the following overlap provisions for engines that are also subject to 40 CFR 60 Subpart IIII.

For new CI engines equal to or less than 500 hp:

> *63.6590(c) Stationary RICE subject to Regulations under 40 CFR Part 60. An affected source that meets any of the criteria in paragraphs (c)(1) through (7) of this section must meet the requirements of this part by meeting the requirements of 40 CFR part 60 subpart IIII, for compression ignition engines or 40 CFR part 60 subpart JJJJ, for spark ignition engines. No further requirements apply for such engines under this part…*
>
> *(6) A new or reconstructed emergency or limited use stationary RICE with a site rating of less than or equal to 500 brake HP located at a major source of HAP emissions*

As such, the Main Control Room Emergency Generator and the Radio Tower Emergency Generator are subject to 40 CFR 63 Subpart ZZZZ but demonstrate compliance through compliance with 40 CFR 60 Subpart IIII.

The engines are certified Tier 3 so they satisfy the requirement in 40 CFR 60 Subpart IIII (40 CFR 60.4211(c)). It is assumed that the engines are installed, configured, operated, and maintained according to the manufacturer's emission-related instructions and the emission-related settings are only changed in a way permitted by the manufacturer. Should this change, a compliance demonstration will be required (40 CFR 60.4211(g)).

Note that this regulatory analysis assumes that these engines are in emergency service as defined in 40 CFR 63 Subpart ZZZZ and discussed in SOB Section 2.2.11. Should PSR choose to operate them otherwise, these engines would be subject to other requirements.

Also, it is assumed that the engines are not used for emergency demand response or voltage/frequency deviations. Should PSR choose to use these engines for either of these purposes, different requirements will become applicable.

Pursuant to 40 CFR 60.4214(b), as emergency stationary ICE, an initial notification is not required for the Main Control Room Emergency Generator and the Radio Tower Emergency Generator.

3.12.2 EP Outfall Pump (9QG68)

The Effluent Plant Outfall Pump is used to discharge treated water from the final retention pond to Fidalgo Bay. It is used during power outages to prevent the pond from overflowing; however,

because it is the largest pump available, it is also used when the capacities of the other pumps are exceeded or not available and the pond level must be reduced. Additionally, it is used to provide firewater to the Dock.

The EP Outfall Pump engine will be installed in 2014. It is a 2013-model-year rated at 373 kW (500 hp) with a cylinder displacement of 2.5 L/cyl (total displacement of 15 L with 6 cylinders). Because the diesel compression ignition (CI) engine was installed after June 6, 2006, it is considered a new engine under 40 CFR 63 Subpart ZZZZ. Because it will operate more than 100 hours per year, it is considered in non-emergency service under 40 CFR 63 Subpart ZZZZ. However, as a diesel pump engine that operates for less than 500 hours per year in emergency service, it is exempt from New Source Review requirements under NWCAA 300.4(i).

As a stationary compression-ignition internal combustion engine that was manufactured after April 1, 2006 and commenced construction after July 11, 2005, this RICE is also subject to 40 CFR 60 Subpart IIII. Similar to the Main Control Room and the Radio Tower Emergency Generators, the overlap provisions in 40 CFR 63 Subpart ZZZZ state that the EP Outfall Pump engine is subject to 40 CFR 63 Subpart ZZZZ but demonstrates compliance through compliance with 40 CFR 60 Subpart IIII.

Subpart IIII has different standards for general internal combustion engines and fire water pumps. The EP Outfall Pump Engine does provide fire water to the Dock but it is not certified by the NFPA. As such, it is subject to the general ICE standards.

Subpart IIII requires that 2007 model year and later non-emergency stationary CI ICE rated at less than 3,000 hp with a displacement of less than 10 L/cyl meet the new nonroad engine standards for the same model year and maximum engine power listed in 40 CFR 89 and 40 CFR 1039. These new nonroad engine regulations require automatic increases in stringency over time – in January 2011, new nonroad engines are required to meet reduced PM and NO_X emissions over what was required for Tier 3 engines. Beginning in January 2014, an additional NO_X reduction is required beyond the reduction required in 2011.

As a 2013 model year, the EP Outfall Pump engine falls in this interim period (a so-called Interim Tier 4 engine). The Cummins QSX15 engine is designed to meet the Interim Tier 4 standards under 40 CFR 1039.102(b) Table 6 using cooled exhaust gas recirculation (EGR) for NO_X and a particulate filter for PM. However, Cummins utilizes the alternative NO_X standard under 1039.102(e) for during the phase-in of the Tier 4 standards. As such, the engine meets the emission limits beginning January 2011 without the additional NO_X reduction required in 2014: NO_X: 2.0 g/kW-hr, NMHC: 0.19 g/kW-hr, CO: 3.5 g/kW-hr, PM: 0.02 g/kW-hr.

The particulate filter is required to be monitored using a back-pressure sensor that will alert when the back-pressure reaches the engine limit.

Note that the smoke standard in 40 CFR 1039.105 does not apply because certified to a PM standard below 0.07 g/kW-hr (i.e., 0.02 g/kW-hr). Also, the evaporative standards in 40 CFR 1039.107 does not apply to diesel engines.

Tier 4 Interim requires that crankcase emissions, also known as blowby gases, be included in the overall regulated engine emissions. To control blowby gas emissions, the engine utilizes a “dripless” crankcase breather system with a coalescing filter element. The filter returns the oil to the crankcase and provides the added benefit of removing oil mist and tiny oil droplets, resulting in a cleaner engine and powertrain.

Subpart IIII also requires that the engine use ultra low sulfur diesel (15 ppm). Cummins requires the use of ULSD in order to meet the PM standard.

It is assumed that the engine is installed, configured, operated, and maintained according to the manufacturer’s emission-related instructions and the emission-related settings are only changed in a way permitted by the manufacturer. Should this change, the compliance demonstration under 40 CFR 60.4211(g) will be required.

Pursuant to 40 CFR 60.4214(a), an initial notification is only required for non-emergency stationary ICE that are greater than 3,000 hp, have a displacement of greater than or equal to 10 L/cyl, or are pre-2007 model year engines that are greater than 175 hp and not certified. Because the EP Outfall Pump does not meet any of these criteria, an initial notification is not required.

3.13 Wastewater and Effluent Plant

The Effluent Plant treats oil-contaminated wastewater from the refinery (referred to as the oily water sewer) that is routed through the process water sewer system. Sources of oily water include catch basins located under processing units, storage tank drains, and ballast water from ships and barges. Oil that is recovered at the Effluent Plant is sent back to the VPS for processing. Left-over solids are either land-farmed or dewatered for shipment off-site.

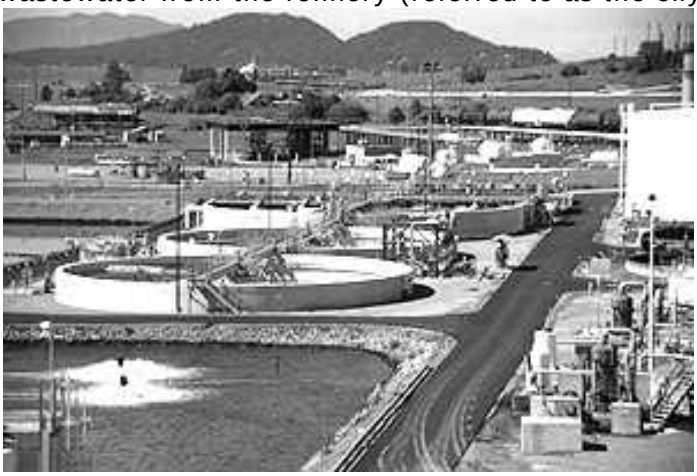

Clean runoff water is treated through a separate storm water sewer system and is discharged with minimal treatment. All treated wastewater is discharged into Fidalgo Bay and periodically tested for water quality in accordance with PSR's National Pollution Discharge Elimination System (NPDES) permit issued by the Washington Department of Ecology.

Oily wastewater from refinery processes is generally routed through uncontrolled drains. These drains largely flow into controlled sewer systems especially as they approach the Effluent Plant. Note that PSR has chosen to control the oily wastewater drain systems associated with the tank farm. In areas where the sewer system must "breathe", closed vents are installed and routed to carbon canisters which capture the hydrocarbon emissions. At junction boxes, water seals are used to prevent the sewer system from venting directly to atmosphere.

When the oily process water arrives at the Effluent Plant, it is routed into a gravity-based API oil/water separator. Here flow rates are reduced allowing oils to float to the surface which are skimmed off with an automated raking device. Following the API, further physical oil water separation occurs at the Dissolved Air Flotation units (DAFs). The DAF units inject air bubbles into the oil/water solution, oil accumulates on the rising bubbles and skimming takes place at the surface to complete the separation process. After the API and DAFs, the remaining contaminants are removed through biological treatment prior to discharge into Fidalgo Bay. A flow diagram of the Effluent Plant is shown in Figure 7.

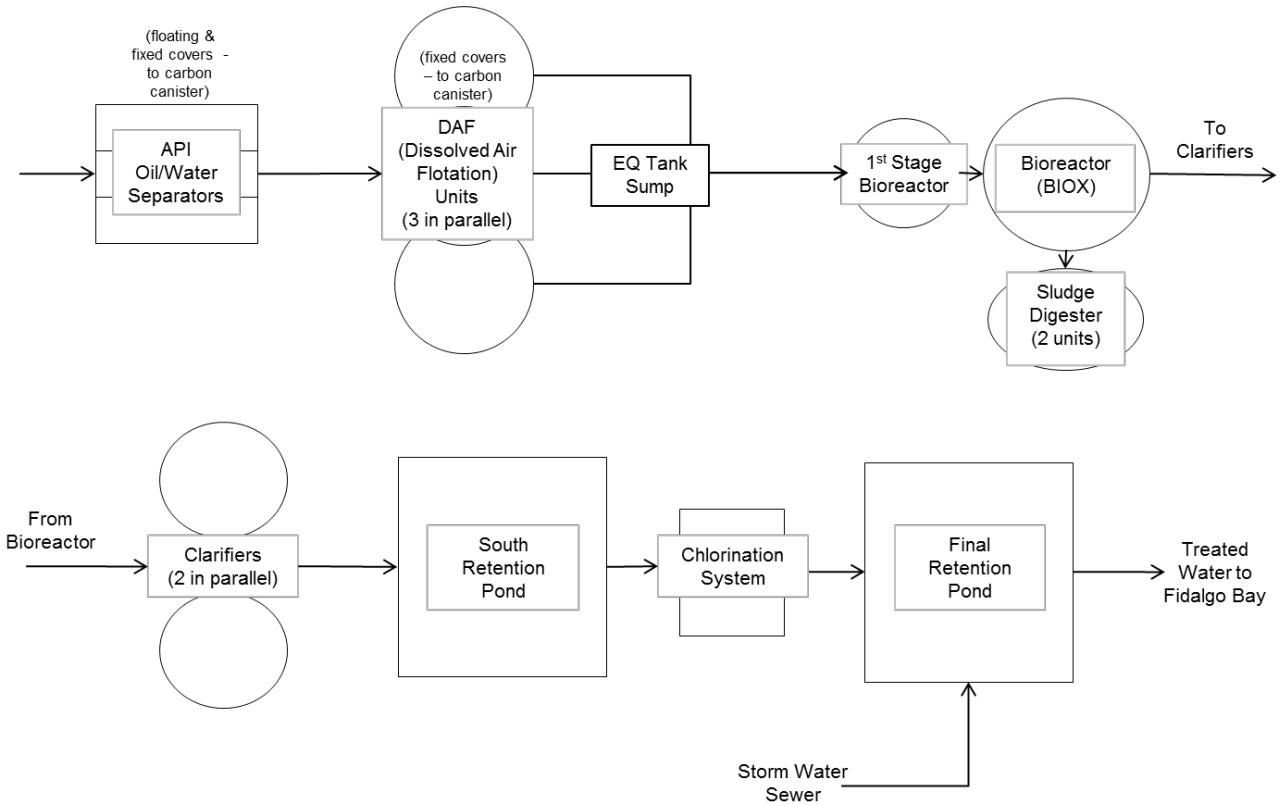

Figure 7 PSR Effluent Plant Flow Diagram

Because of the potential for VOC/HAP emissions, portions of the Effluent Plant are covered and sealed. The API forebays are covered with a fixed roof routed to activated carbon; the API main bays are covered with a floating roof. As with the API forebays, the DAF units are covered with fixed roofs with any vapor emissions routed through activated carbon. The stream then enters the uncontrolled First Stage Bioreactor (formerly Tank 74); it serves as a pre-reactor for the bioreactor and any odors are controlled as needed using a biofilm filter system.

The refinery does not operate any active benzene treatment processes (e.g., steam stripping unit, thin-film evaporation unit, waste incinerator, furnace or boiler burning hazardous waste for energy recovery) beyond the wastewater treatment plant. In addition, the only control devices the wastewater treatment plant uses is carbon canisters; the carbon is shipped off-site for regeneration.

Because the sanitary sewer is also treated by the Effluent Plant, the treated water is chlorinated prior to release into Fidalgo Bay. Chlorine gas was originally used as the chlorination agent; in 1996/97, PSR switched to bleach.

Construction History and Regulatory Applicability

The original refinery was constructed with an oily water sewer system and effluent plant in 1958. The entire oily water sewer system and effluent plant were vented to the atmosphere until 1990 at which time NWCAA 580.23 required that the API forebays be covered. Shortly thereafter, 40 CFR 61 Subpart FF was promulgated requiring the refinery to control emissions from applicable wastewater systems having benzene concentrations greater than 10 ppm. As a result, covers were installed on the API mainbays (OAC 332 issued September 30, 1991) and afterbays (OAC 416 issued January 12, 1993 for DAFs 1&2), the trickling filter was removed and a new biological treatment system was installed. In order to bring benzene concentrations down to acceptable levels prior to open-air biological treatment, an additional DAF unit was installed after the API (OAC 514 issued July 11, 1994 for DAF 3). In addition, the main oily water sewer

line running from the tank farm to the Effluent Plant was sealed and, where "breathing" was necessary, carbon canisters were installed on the vent lines (OAC 417 issued January 6, 1993). Because these projects and OACs were related and relatively close in time, these four OACs were combined into OAC 514a issued April 10, 2013.

The EP went through an upgrade in 1996. Two clarifiers were built, one of the two original retention ponds was removed (the south pond remains), and the original aerator/clarifiers were converted into sludge digesters. No construction permit was issued for this upgrade.

Benzene-contaminated wastewater that was being stored (or treated) in tanks was also controlled by installing either IFR tanks or by having fixed roof tanks that vent through a closed vent system to activated carbon (OAC 241 issued January 14, 1988 for construction of IFR Tank 70, RO issued January 26, 1990 to convert fixed roof Tank 62 to an IFR by May 31, 1990, OAC 316 issued May 18, 1990 for construction of IFR Tank 71, OAC 341 issued September 12, 1991 to convert fixed roof Tank 60 to an IFR, and OAC 345 issued November 1, 1991 to construct EFR Tanks 72 and 73 and fixed roof Tank 74 with activated carbon). Each of these OACs have been updated in preparation for inclusion in the AOP.

To resolve an enforcement action, PSR installed an odor neutralizer system on the Effluent Plant bioreactor for which the NWCAA issued Regulatory Order (RO) 33 on July 15, 2008. Based on the Agency complaint load, the odor neutralizer system did not seem to be effective in this application; as such, upon request, the NWCAA rescinded RO 33 on June 12, 2013.

In July 2013, Tank 74 began operation after having been converted from a controlled surge tank to the First Stage Bioreactor. During the conversion, the tank was outfitted with air distribution units and stocked with the same activated sludge as in the existing bioreactor. After the conversion, the First Stage Bioreactor (Tank 74) is no longer a controlled unit under 40 CFR 61 Subpart FF being equipped with activated carbon; any odors from the vessel are controlled using a biofilm filter system.

Effluent Plant and Sewer System (ETPPDF): In addition to 40 CFR 61 Subpart FF, wastewater streams and treatment operations associated with refining process units are also subject to 40 CFR 63 Subpart CC (Refinery MACT 1). Pursuant to 40 CFR 63.647, Group 1 wastewater streams must comply with 40 CFR 61 Subpart FF. Group 1 wastewater streams are defined under Refinery MACT 1 as "a wastewater stream at a petroleum refinery [such as PSR] that has a flow rate of 0.02 liters per minute or greater, a benzene concentration of 10 parts per million by weight or greater, and is not exempt from control requirements under the provisions of 40 CFR part 61, subpart FF." Group 2 wastewater streams are those that do not meet the definition of a Group 1 wastewater stream. Note that to be subject to Refinery MACT 1, the stream must contain at least one of the listed hazardous air pollutants.

Portions of the wastewater treatment process are also potentially subject to 40 CFR 60 Subpart QQQ. 40 CFR 60 Subpart QQQ applies to individual drain systems, oil-water separators, and aggregate facilities constructed, modified, or reconstructed after May 4, 1987 thereby triggering requirements for VOC control. Modified units include process drains at the DCU, the FCCU, the Nonene Unit, HTU2, HTU3, the ISOM Unit, BRU, the Diesel Railcar Loading Rack, the Nonene Truck and Railcar Loading Rack, and Flare Gas Recovery. Also, the DAF3 was constructed after the effective date so is directly subject to 40 CFR 60 Subpart QQQ.

Through an overlap provision in the Refinery MACT 1, 40 CFR 63.640(o) allows for consolidation of wastewater programs by stating that "a Group 1 wastewater stream managed in a piece of equipment that is also subject to the provisions of 40 CFR part 60, subpart QQQ is required to comply only with this subpart." As such, the unit will need to comply with the wastewater provisions under 40 CFR 63 Subpart CC, which reference 40 CFR 61 Subpart FF. Note that the Subpart QQQ requirements are listed for each subject process unit, with an exception for wastewater streams regulated under 40 CFR 63 Subpart CC. However, the Subpart CC (Refinery MACT 1) and Subpart FF requirements for individual drain systems are addressed under the Effluent Plant requirements in AOP Section 5.13.

According to 40 CFR 61 Subpart FF (40 CFR 61.357(d)(1)), the annual TAB report is due 90 days after January 7th. However, once the requirement is rolled into the AOP, reports must be submitted on the AOP schedule based on WAC 173-401-615(3). As such, the annual TAB report is due within 30 days of the end of the applicable period (i.e., January 30th for annual reports).

Effluent Plant Storage Tanks: According to the definition of storage vessel under 40 CFR 63 Subpart CC, wastewater tanks are not considered storage tanks; they must comply with the Subpart CC wastewater provisions. As such, the overlap provisions for Subpart CC and NSPS tank requirements (i.e., Subparts K, Ka, and Kb) for storage vessels do not apply to wastewater tanks.

Therefore, the Effluent Plant storage tanks are also potentially subject NSPS tank requirements (i.e., 40 CFR 60 Subparts K, Ka, and Kb) and also to 40 CFR 61 Subpart FF. Note Subpart FF includes an alternative standard for tanks that references Subpart Kb requirements.

Tanks 60 and 62 were constructed with the original refinery in 1958 but were fitted with internal floating roofs in the early 1990s. Pursuant to 40 CFR 60.14(e)(5), addition of control devices (such as floating roofs) are not considered modifications under NSPS; therefore, these tanks remain not subject to 40 CFR 60 Subpart Kb.

However, Tanks 70, 71, 72, and 73 were constructed after the Subpart Kb applicability date and are therefore potentially subject. Because of the variability in the contents and vapor pressures in the Effluent Plant storage tanks, it is conservatively assumed that Subpart Kb applies to each.

According to a letter from PSR dated October 13, 2004, PSR conducted a review pursuant to the Equilon Consent Decree and determined that Tanks 60, 61, 62, 70, 71, 72, and 73 are subject to 40 CFR 60 Subpart Kb.

NWCAA 560 and 580.3 potentially apply to the Effluent Plant storage tanks that store organic liquids with a vapor greater than 1.5 psia. Similarly to Subpart Kb, it is conservatively assumed that NWCAA 560 and 580.3 apply to each Effluent Plant storage tank because of the variability in the contents and vapor pressures.

Many of the requirements in NWCAA 560 and 580.3 do not have associated monitoring, recordkeeping, and reporting requirements; as such, these have been gap-filled into the AOP. Most of the gap-filled requirements parallel those required in the other applicable rules.

EP Outfall Pump (9QG68): This pump is subject to 40 CFR 63 Subpart ZZZZ. See SOB Section 2.2.11 for further discussion.

Excluded Conditions: All OAC conditions issued for wastewater handling and control have been incorporated into the AOP except as follows.

OAC 514a (issued April 10, 2013) Conditions 1, 2, 3, and 4 requiring notification when construction or installation is complete and operation is expected to begin are not listed in the AOP because they are each one-time requirements that have been completed. As such, OAC 514a is not listed in AOP Section 5.

Condition 1 of OAC 316a (issued April 10, 2013) for Tank 71 requiring notification prior to placing the tank into service is not listed in the AOP because it is a one-time requirement that has been completed. As such, OAC 316a is not listed in AOP Section 5.

Condition 1 of OAC 345a (issued April 10, 2013) for Tanks 72, 73, and 74 requiring notification when the project was complete is not listed in the AOP because it is a one-time requirement that has been completed. As such, OAC 345a is not listed in AOP Section 5. Additionally, this OAC is not listed in AOP Section 1 for the First Stage Bioreactor (formerly Tank 74) because Tank 74 is no longer considered a storage tank but part of the bioreactor system.

The Regulatory Order issued January 26, 1990 regarding conversion of fixed roof Tank 62 to an internal floating roof tank by May 31, 1990 is not listed in the AOP because the requirement has been completed as evidenced by the NWCAA inspection report on April 3, 1990.

3.14 Storage Tanks/Vessels

The refinery maintains several storage tanks (also referred to as storage vessels) used to provide storage for raw materials, intermediates, and final products: 29 external floating roof (EFR) tanks, 13 internal floating roof (IFR) tanks, 19 fixed roof tanks, and 15 pressurized storage vessels. Note that storage tanks located at the Effluent Plant are addressed under SOB Section 3.13.

The majority of high vapor pressure (>1.5 psia) volatile organic liquids (VOLs) at PSR are stored in external floating roof (EFR) tanks. All EFR tanks use a double seal system between the tank wall and floating roof cover as required by the underlying regulations. Generally, the double seal configuration at PSR is a metallic shoe primary seal and a rim-mounted secondary seal.

Internal floating roof (IFR) tanks are also used to store high vapor pressure VOLs at the refinery. They are also used for store a wide array of materials (e.g., slop oils, wastewater emulsions). At PSR, IFR tanks generally use a fixed cone roof covering over the top of the tank with an internal floating roof having at least a single seal system between the tank wall and floating roof cover. A second seal is not required by the underlying regulations because the fixed roof cover serves to reduce exposure of the floating roof to the environment thereby reducing fugitive VOC and HAP emissions. In some cases, two internal seals are used for added emission control. IFR tanks equipped with a double seal system are allowed a more flexible inspection schedule under NSPS and Refinery MACT 1 requirements.

Fixed roof tanks are limited by rule to storing materials with vapor pressures of 0.75 psia or less. Certain tanks storing materials with very low vapor pressures are equipped with internal heaters to warm the material to manage the material viscosity. The fixed roof tanks at PSR are generally equipped with cone roofs.

Gaseous products, such butane, propane and LPG are stored in pressurized vessels. There are no requirements for pressurized vessels as they are considered closed systems that do not vent to the atmosphere. However, each is equipped with a pressure relief device (PRD) that reduces stress on the vessel before the tank itself is damaged. In many cases PRDs are vented to the atmosphere, however, in some cases they are routed through a closed vent system to the flares.

Construction History and Regulatory Applicability

Several of the refinery storage tanks were built as part of the original refinery construction in 1958. A few tanks were added in the early 1970s, and a few more have been added or modified since. See the tables in AOP Section 1.14 for specific tank service and construction dates.

Several regulatory programs potentially apply to refinery storage tanks. These programs include:

- 40 CFR 60 Subpart K - Standards of Performance for Storage Vessels for Petroleum Liquids for Which Construction, Reconstruction, or Modification Commenced After June 11, 1973, and Prior to May 19, 1978 (NSPS K)
- 40 CFR 60 Subpart Ka - Standards of Performance for Storage Vessels for Petroleum Liquids for Which Construction, Reconstruction, or Modification Commenced After May 18, 1978, and Prior to July 23, 1984 (NSPS Ka)
- 40 CFR 60 Subpart Kb: New Source Performance Standards for Volatile Organic Liquid Storage Vessels (Including Petroleum Liquid Storage Vessels) for Which Construction, Reconstruction, or Modification Commenced After July 23, 1984 (NSPS Kb)
- 40 CFR 63 Subpart CC: National Emission Standards for Hazardous Air Pollutants From Petroleum Refineries (Refinery MACT 1)
- NWCAA 560: Storage of Organic Liquid
- NWCAA 580.3: High Vapor Pressure Volatile Organic Compound Storage Tanks

- NWCAA 580.9: High Vapor Pressure Volatile Organic Compound Storage in External Floating Roof Tanks

The applicability of these programs depend variously on tank capacity; construction, reconstruction, or modification date; vapor pressure (VP); and organic or HAP content of stored liquid. To demonstrate regulatory inapplicability for specific tanks, records demonstrating that the type of product stored and vapor pressures, periods of storage, and storage capacities of each tank should be kept.

Storage vessels with a capacity greater than or equal to 75 m^3 that is used to store volatile organic liquids (VOL) for which construction, reconstruction, or modification is commenced after July 23, 1984 are subject to 40 CFR 60 Subpart Kb. VOL for the purposes of Subpart Kb are any organic liquids that have the potential to emit VOCs. The criteria for vessels to be subject to specific control requirements are summarized in Table 3-1.

Table 3-1: Control Requirement Thresholds for VOL Storage Vessels

Control Requirements Thresholds	kPa	psia
NSPS K & Ka control for tanks ≥ 40,000 gal (151 m^3)	(10.4)	1.5
NSPS Kb control for tanks ≥ 151 m^3 (40,000 gal)	5.2	(0.75)
NSPS Kb control for tanks ≥ 75 m^3 (19,800 gal)	27.6	(4.0)
Refinery MACT 1 Group 1 tanks: ≥ 177 m^3 (46,758 gal)	10.4	(1.5)
NWCAA control for tanks ≥ 40,000 gallons (151 m^3)	(10.4)	1.5
NWCAA & NSPS MTVP of stored VOL for EFR or IFR tanks	76.6	11.1

Note: Federal regulations use IS units, whereas the NWCAA regulation uses English units. Values in parentheses are calculated.

Several fixed roof storage tanks were constructed with the original refinery in 1958 but were subsequently fitted with floating roofs (i.e., Tanks 14, 15, 30, TK-15D-100A, TK-15D-100B, and TK-15D-100C). Pursuant to 40 CFR 60.14(e)(5), addition of control devices (such as floating roofs) are not considered modifications under NSPS; therefore, these tanks remain not subject to 40 CFR 60 Subparts K, Ka, or Kb, as appropriate.

According to a letter from PSR dated October 13, 2004, PSR conducted a review pursuant to the Equilon Consent Decree and determined that Tanks 12, 13, and 14 are subject to 40 CFR 60 Subpart Kb.

Storage vessels associated with petroleum refinery process units that contact one or more of the listed HAPs are required to meet the requirements of 40 CFR 63 Subpart CC (also referred to as Refinery MACT 1). Under Refinery MACT 1, subject storage vessels are divided into Group 1 and Group 2. Existing Group 1 storage vessels have a design storage capacity greater than 177 m^3, a stored liquid maximum true vapor pressure of 10.4 kPa, and an annual average HAP liquid concentration greater than 4 weight percent. Group 2 storage vessels are any vessels that do not meet the Group 1 definition. Refinery MACT 1 requires that Group 1 tanks comply with the requirements under 40 CFR 63 Subpart G (National Emission Standards for Organic Hazardous Air Pollutants From the Synthetic Organic Chemical Manufacturing Industry for Process Vents, Storage Vessels, Transfer Operations, and Wastewater) with a few modifications listed in 40 CFR 63.646.

For those storage tanks that are subject to both NSPS Kb and Refinery MACT 1, EPA provided an overlap provision under 40 CFR 63.640(n) that allows those tanks at an existing refinery (such as PSR) to comply with 40 CFR 60 Subpart Kb with a few modifications listed under 40 CFR 63.640(n)(8).

For Group 1 storage tanks that are also subject to NSPS K or Ka, they must comply with Refinery MACT 1 requirements. Group 2 tanks that are subject to the control requirements under NSPS K or Ka shall comply with the provisions of NSPS K or Ka as modified as listed under 40 CFR 63.640(n)(9). Group 2 tanks are subject to NSPS K or Ka but not the associated NSPS control requirements shall comply with the Refinery MACT 1 requirements.

As discussed in SOB Section 3.4.2, the nonene product has the potential to contain one or more of the listed HAPs under Subpart CC. As such, the nonene storage tanks (Tank 80, 81, and 82) are subject to 40 CFR 63 Subpart CC Group 2 storage vessel requirements.

Note that NWCAA 580.32 allows three options when defining a control strategy for controlled tanks:

> 580.32 It shall be unlawful for any person to cause or allow storage of volatile organic compounds as specified in Section 580.31 unless each storage tank or container:
>
> > 580.321 Meets the equipment specifications and maintenance requirements of the Federal Standards of Performance for New Stationary Sources -Storage Vessels for Petroleum Liquids (40 CFR 60, subpart Kb); or
> >
> > 580.322 Is retrofitted with a floating roof or internal floating cover using a metallic seal or a nonmetallic resilient seal at least meeting the equipment specifications of the Federal standards referred to in 580.321 of this subsection, or its equivalent; or
> >
> > 580.323 Is fitted with a floating roof or internal floating cover meeting the manufacturer's equipment specifications in effect when it was installed.

Because of the regulatory uncertainty associated with 580.322 and 580.323, the AOP is written assuming that the refinery is using NSPS Subpart Kb as the control method. Therefore, citations to NWCAA 580 include references to the equipment specifications and maintenance sections of 40 CFR 60 Subpart Kb. Because this requirement only mandates the source to comply with NSPS Kb and does not make the tank an affected source subject to NSPS Kb, the overlap provision under Refinery MACT 1 does not apply. As such, when both NWCAA 580.32 and Refinery MACT 1 apply to a tank, both sets of requirements are listed (i.e., Subpart Kb via reference from NWCAA 580.32 and 40 CFR 63 Subpart G via reference from Refinery MACT 1).

Under the current version of NWCAA Section 580 (580.26 and 580.37), a storage tank that is subject to a federal rule (NSPS or NESHAP) is exempt from the requirements under NWCAA 580.3, 580.9, and 560. However, these exemptions are not in the current State Implementation Plan (SIP) and, therefore, are not federally enforceable. Because of this discrepancy, only the SIP-adopted version of NWCAA 580 citations are found in the AOP.

PSR has not chosen to request any alternative means for determining compliance for any storage vessel and therefore none are listed in the AOP.

PSR entered into a Storage Tank Emission Reduction Partnership Agreement with EPA. This agreement requires PSR to install and maintain a cover on the slotted guidepole opening on Tank 38. Pursuant to paragraph 31, the requirement to install, maintain, and inspect the slotted guidepole cover survives the termination of the agreement. The NWCAA issued Compliance Order (CO) 08 to memorialize this requirement and create an applicable requirement for inclusion in the AOP.

Excluded Conditions: There are a number of tanks that have orders issued by the NWCAA with applicable requirements beyond the applicable federal, state, and local requirements. Some conditions listed in the orders are not listed in the AOP for the following reasons.

Condition 1 of OAC 262a (issued April 10, 2013) for Tank 15 requiring notification when construction of the floating roof is complete is not listed in the AOP because it is a one-time requirement that has been completed. As such, OAC 262a is not listed in AOP Section 5.

Note that Tank 20 is an EFR tank used to hold sour water at the refinery. Although this tank is not subject to specific regulation, controls are in place to limit its potential for odorous emissions.

Condition 1 of OAC 295a (issued April 10, 2013) for Tank 38 requiring notification prior to placing the tank into service is not listed in the AOP because it is a one-time requirement that has been completed. As such, OAC 295a is not listed in AOP Section 5.

4. AIR OPERATING PERMIT ADMINISTRATION

In developing the AOP for PSR, the NWCAA developed assumptions for the AOP and established permit elements. Assumptions are discussed in Section 4.1. Permit elements are presented in Section 4.2. Section 4.3 lists the AOP Public docket information. Finally, Section 4.4 lists the definitions and acronyms used throughout the SOB and AOP.

4.1 Permit Assumptions

The following describes the assumptions the NWCAA used in developing this Statement of Basis and AOP.

4.1.1 One-Time Only Requirements

Applicable requirements that were satisfied by a single past action on the part of the source are not included in the AOP but are discussed in the Statement of Basis. Regulations that require action by a regulatory agency, but not of the regulated source are not included as applicable permit conditions.

4.1.2 "Narrative" Orders of Approval to Construct (OAC)

The following Orders of Approval to Construct (OAC) issued by the NWCAA under the minor new source review program have not been incorporated into the AOP because they are considered to be "narrative only". These permits are all relatively old, all originally being issued prior to 1986. Because they are narrative in content, they do not contain any specific conditions that are considered specifically applicable requirements under Title V.

- OAC 74 (July 19, 1972): Octane Improvement Project
- Letter issued May 24, 1973: Crude Expansion Facility
- OAC 120 (October 10, 1973): Crude Oil Storage Tanks (Tanks 4, 5, 6)
- OAC 179 (May 13, 1976): Slop Oil Vapor Control System including installation of an internal floating roof on Tank 14
- OAC 267 (March 25, 1982): Construction of Tank 20
- OAC 286 (April 17, 1984): Outside Coke Storage (duplicate OAC number)
- OAC 301 (June 14, 1985): Construction of three DCU Slop Oil Tanks (TK-15D-100A, -100B, and -100C)

4.1.3 Superseded Requirements

Requirements in permits (OACs) that have been superseded are not considered applicable requirements and are not included in the AOP.

4.1.4 Federal Enforceability

Federally enforceable requirements are terms and conditions required under the Federal Clean Air Act (FCAA) or under any of its applicable requirements. Local and state regulations may become federally enforceable by formal approval and incorporation into the State Implementation Plan (SIP) or through other delegation mechanisms. Federally enforceable requirements are enforceable by the EPA and citizens. All applicable requirements in the permit including standard terms and conditions, generally applicable requirements, and specifically applicable requirements are federally enforceable unless identified in the permit as enforceable only by the state.

Most rules and requirements are followed by a date in parentheses. For the WAC regulations, the date listed in parenthesis in the air operating permit represents the State Effective date. For

the NWCAA regulations, the date represents the most recent Board of Directors adoption date, which is identified as the "Passed" or "Amended" date in the NWCAA Regulation. The date associated with an OAC permit represents the issuance date of that new source review construction permit. For a federal rule, the date is the rule section's most recent promulgation date.

Two different versions (identified by the date) of the same regulatory citation may apply to the source if federal approval/delegation lags behind changes made to the Washington Administrative Code (WAC) or the NWCAA Regulation. As such, those citations that have been federally approved (i.e., incorporated into the SIP) are federally enforceable; the date listed is when it was incorporated into the SIP. If the rule has subsequently changed, those changes are enforceable only by the state or the NWCAA; the date listed is of the current version and is identified as "State Only".

Chapter 173-401 WAC is not federally enforceable although the requirements of this regulation are based on federal requirements for the air operating permit program. Upon issuance of the permit, the terms based on Chapter 173-401 WAC become federally enforceable for the source.

4.1.5 Future Requirements

Applicable requirements that have been promulgated with future effective compliance dates may be included as applicable requirements in the AOP with a reference stating when compliance needs to be demonstrated. Some requirements that are not applicable until triggered by an action, such as the requirement to file a Notice of Construction application prior to building a new emission unit, are addressed within the standard terms and conditions section of the AOP.

4.1.6 Alternative Operating Scenarios & Compliance Options

PSR did not request emissions trading provisions or specify more than one operating scenario in the AOP application; therefore the permit does not address these options as allowed under WAC 173-401-650. There are certain emission units that are permitted to operate in different modes; for those units, both scenarios are written into the permit with a recordkeeping requirement to document under which scenario the emission unit is operating. For example, the fluidized catalytic cracking unit normally operates under partial burn mode. However, the FCCU may be operated under total burn mode, which is defined in the permit. On a monthly basis, the number of hours when the unit was operated under total burn mode is reported to the NWCAA.

This permit does not condense overlapping applicable requirements (streamlining) nor does it provide any alternative emission limitations, except those approved by EPA (e.g., AMPs).

4.1.7 Gap Filling

Title V of the Federal Clean Air Act is the basis for 40 CFR Part 70, which is the basis for the State of Washington air operating permit regulation, Chapter 173-401 WAC. Title V requires that all air pollution regulations applicable to the source be called out in the air operating permit for that source. Title V also requires that each applicable regulation be accompanied by a federally enforceable means of "reasonably assuring continuous compliance". Some of the older general regulations and federal new source performance standards do not have monitoring, recordkeeping, and reporting requirements that are sufficient to reasonably assure continuous compliance with the emission limitation. Title V, 40 CFR Part 70, and WAC 173-401-615 all contain a "gap-filling" provision to address an inadequate compliance demonstration. The permitting agency is required to create monitoring, recordkeeping, and reporting requirements that fill the gap and to put those requirements in the air operating permit. In any term where gap-filling has taken place, the term "Directly Enforceable" will be included as described in the introductory paragraph to each section.

4.2 Permit Elements

The air operating permit is organized in the following sequence:

- Permit Information
- Attest
- Table of Contents
- Section 1 - Emission Unit Identification
- Section 2 - Standard Terms and Conditions
- Section 3 - Standard Terms and Conditions for NSPS and NESHAP
- Section 4 - Generally Applicable Requirements
- Section 5 - Specific Applicable Requirements
- Section 6 – Commonly Referenced Requirements
- Section 7 - Inapplicable Requirements

AOP Sections 2 through 6 include citations to applicable requirements (e.g., regulations and OACs) and a summary of that requirement. In addition, AOP Sections 4 through 6 include the monitoring, recordkeeping and reports (MR&R) obligations for each requirement.

4.2.1 Permit Information and Attest Pages.

The Information Page identifies the facility, the responsible corporate official, the Agency personnel responsible for permit preparation, the date of permit issuance, and the due date for the renewal application. The Attest section provides NWCAA's authorization for the source to operate under the terms and conditions contained in the air operating permit.

4.2.2 Emission Unit Identification

AOP Section 1 entitled "Emission Unit Identification" is a non-enforceable section of the permit that is meant to list and provide relevant information on significant emission units at the refinery. It includes emission unit identification numbers, size of the unit, control equipment where applicable, fuel type, applicable regulations, and other related comments. The emission unit identification number commonly used at the refinery is the process unit/area number followed by the equipment number.

4.2.3 Standard Terms and Conditions

AOP Section 2 entitled "Standard Terms and Conditions" contain administrative requirements and prohibitions in the State and the NWCAA regulations that do not generally have ongoing compliance monitoring requirements. The citations giving legal authority to the Standard Terms and Conditions are provided in the section. At times, requirements are paraphrased. In this case, the language of the cited regulation takes precedence over the paraphrased summary. For clarity and readability, the terms and conditions have been grouped by function. Similar requirements from the State and the NWCAA regulations are grouped together where possible. There are several requirements included that are not applicable until triggered. An example of these would be the requirement to file a "Notice of Construction and Application for Approval" prior to construction a new emissions source.

4.2.4 Standard Terms and Conditions for NSPS and NESHAP

The Standard Terms and Conditions for New Source Performance Standards (NSPS) and National Emission Standards for Hazardous Air Pollutant (NESHAP) section of the air operating permit also specifies administrative requirements or prohibitions with no ongoing compliance

monitoring requirements. The conditions in this section, AOP Section 3, are taken from the "General Provisions" of 40 CFR Parts 60, 61, and 63. They apply specifically to the affected sources, affected facilities, or stationary sources subject to the standards of 40 CFR Parts 60, 61, and 63. These affected sources, affected facilities, or stationary sources, identified in AOP Section 5, are linked to the requirements in AOP Section 3 by a note either in the first row of the table of requirements for the unit, or within the description of the regulatory requirement itself.

4.2.5 Generally Applicable Requirements

AOP Section 4 entitled "Generally Applicable Requirements" identifies requirements that apply broadly to the facility-wide. These requirements are generally not called out in OACs and instead are found as general air pollution rules in the NWCAA Regulation or the Washington Administrative Codes.

When referring to the tables in AOP Sections 4, 5, and 6, the first column lists the AOP term number and pollutant or type of requirement. The AOP terms are numbered consecutively to individually identify each requirement and so that the reader may easily locate a referenced term. Next, the citation column includes the legal citation which is a federally enforceable requirement unless listed as "State Only". The "description" column is a paraphrase of the requirement for informational purposes only; the language of the cited regulation takes precedence over a paraphrased requirement.

The last column, lists the monitoring, recordkeeping and reporting (MR&R) requirements. The MR&R is a summary of the underlying requirements cited in the "citation" column and is not enforceable – the language of the cited regulation takes precedence over a paraphrased requirement. However, when there is text in the MR&R column that states "Directly Enforceable", all text below that statement has been added by the NWCAA as part of the agency's gap-filling authority and these additional requirements are enforceable. The agency uses gap-filling when the cited underlying requirement (e.g., regulation, OAC) does not provide adequate monitoring, recordkeeping and/or reporting methods to demonstrate compliance with the applicable requirement. In these cases, the NWCAA uses its authority under WAC 173-401-615(b) to gap-fill with adequate MR&R.

In some cases there are no MR&R or test methods listed in the AOP for a permit term. This is often due to the nature of the emission source, the lack of specifics in the underlying requirement, and/or the slim likelihood that the legal requirement will be violated. Note that the facility must certify annual compliance with each term even if there are no explicit MR&R requirements.

4.2.6 Specifically Applicable Requirements

AOP Section 5 entitled "Specifically Applicable Requirements" lists requirements that are specific to the individual emission units. Each table in AOP Section 5 represents a refinery process unit or area. Within each table, emission units (EU) are presented in the order they are listed in AOP Section 1. As a general practice, general terms are presented first, followed by heaters, vents, heat exchangers, fugitive emission components, and lastly drains. For each emission unit, permit terms are generally presented in the following order: general, nitrogen oxides (NO_X), carbon monoxide (CO), sulfur dioxide (SO_2), visible emissions (VE), particulate matter (PM/PM_{10}), volatile organic compounds (VOC) and hazardous air pollutants (HAP).

The emission limitations and MR&R requirements are derived from the underlying requirements that are cited in the first column. As with generally applicable requirements some specifically applicable requirements do not have source monitoring requirements due to the inherent nature of the source and the likelihood that the legal requirement will not be violated.

4.2.7 Commonly Referenced Requirements

The refinery maintains multiple similar emission units (e.g., process heaters, fugitive components, wastewater drains), each subject to certain regulatory programs. Rather than repeating the requirements for each unit in AOP Section 5, the requirements are listed once in AOP Section 6 and are referenced under the specific emission unit in AOP Section 5. AOP Section 6 entitled "Commonly Referenced Requirements" includes:

- Opacity monitoring for refinery combustion units (see SOB Section 2.5 for further discussion)
- Leak Detection and Repair (LDAR) program requirements from 40 CFR 60 Subpart VV (see SOB Section 2.2.14 for further discussion)
- Leak Detection and Repair (LDAR) program requirements from 40 CFR 60 Subpart VVa (see SOB Section 2.2.14 for further discussion)
- 40 CFR 60 Subpart QQQ requirements for individual drain systems (see SOB Section 2.1.9 for further discussion)
- 40 CFR 63 Subpart DDDDD (Boiler MACT) requirements (see SOB Section 2.2.12 for further discussion)
- 40 CFR 63 Subpart CC requirements for heat exchangers (see SOB Section 2.2.7 for further discussion)

Note that wastewater stream compliance under 40 CFR 61 Subpart FF for all process units throughout the refinery is addressed under the Individual Drain Systems in the Effluent Plant and Sewer System in AOP Section 5.13.

4.2.8 Inapplicable Requirements

WAC 173-401-640 requires that the permitting authority to issue a determination regarding the applicability of requirements with which the source must comply. The air operating permit lists requirements that are deemed inapplicable to the facility. The basis for each determination of inapplicability is included.

4.2.9 Insignificant Emissions Units

Table 4-1 below lists emission units present at PSR that are insignificant based their emission rate, size, or production rates in accordance with WAC 173-401-530 and -533. Column three of the table provides a justification for the exemption based on operational characteristics for each unit. Some categorically exempt insignificant emission units as defined in WAC 173-401-532 are present at PSR but are not required to be listed herein. An emission unit cannot be considered insignificant if it is subject to any federally-enforceable applicable requirement.

Note that the Generally Applicable requirements in AOP Section 4 apply to all insignificant emission units, although the monitoring, recordkeeping, and reporting requirements are deemed to not apply.

Table 4-1: Insignificant Emission Units

Exempt Unit	WAC Citation	Comment
Landfarms	WAC 173-401-530(1)(d)	Generates only fugitive emissions
Amine Storage Tank 5JD2: DGA 100%	WAC 173-401-530(4)	Actual emissions are below the listed thresholds
Lean Amine Storage Tank 5JD205: DGA 40%	WAC 173-401-530(4)	
Lean Amine Storage Tank 5JD15: DGA 40%	WAC 173-401-530(4)	

Exempt Unit	WAC Citation	Comment
Amine Regeneration Units	WAC 173-401-530(4)	
Lean MDEA Tank 17D101	WAC 173-401-530(4)	
Wastewater Bullet Tank 105 (Sour water degassing drum)	WAC 173-401-530(4)	
Chevron Additive Tank (23ND12)	WAC 173-401-530(4)	
Exxon Additive Tank (23ND3)	WAC 173-401-530(4)	
Generic Additive Tank (23ND13)	WAC 173-401-530(4)	
Shell Additive Tank (23ND11)	WAC 173-401-530(4)	
HiTech Additive Tank (23ND4)	WAC 173-401-530(4)	
Dock Clean System 3 Trailer: 600 gallons	WAC 173-401-530(4)	
Dock Foam Tank: 4,500 gallons	WAC 173-401-530(4)	
Propane Bullets Odorant Tank (21ND4): 3,000 gallons	WAC 173-401-530(4)	
TTLR Odorant Tank (23NC20): 1,000 gallons	WAC 173-401-530(4)	
TTLR Foam Tank (23ND7): 600 gallons	WAC 173-401-530(4)	
TCLR Odorant Tank (23NC21): 1,000 gallons	WAC 173-401-530(4)	
TCLR R620 Lubricity Additive (23NC26): 6,507 gallons	WAC 173-401-530(4)	
EP Polymer Tank: 2,000 gallons	WAC 173-401-530(4)	
EP Tank S-16 Biosolids Transfer Tank: 1,096 bbls	WAC 173-401-530(4)	
Tank 63 (corrosion inhibitor)	WAC 173-401-530(4)	
Tank 65 (cold flow improver)	WAC 173-401-530(4)	
Tanks 66 and 77 (12% bleach): 148 gallons each	WAC 173-401-530(4)	
Tank 67 (Morton Automate dye)	WAC 173-401-530(4)	
Tank 68 (Diesel ignition improver)	WAC 173-401-530(4)	
Tank 69 (Automate red dye)	WAC 173-401-530(4)	
Tank 7 (Crude oil safety confinement tank)	WAC 173-401-530(4)	
Garage Unleaded Gasoline Fuel Tanks: 2,000 gallons underground storage tanks for plant vehicle use	WAC 173-401-530(4)	
Refinery Laboratory	WAC 173-401-530(4)	
Emergency 100-kW Steam Generator (unit powered by steam)	WAC 173-401-530(4)	
Emergency 200-kW Steam Generator (unit powered by steam)	WAC 173-401-530(4)	
Amine Storage Tank Tank 104 (Vapors to flare system after being scrubbed with lean DGA)	WAC 173-401-530(4)(q)	
Amine Pit with Vent Sorb 5JD16 (Amine pit air emissions are controlled with a charcoal scrubber)	WAC 173-401-530(4)(q)	
Garage Diesel Fuel Tank: 1,000 gallons underground storage tanks for plant vehicle use	WAC 173-401-533(2)(c)	Capacity less than 10,000 gallons and vapor pressure less than 80 mmHg at 21°C

Exempt Unit	WAC Citation	Comment
Cleaning and Painting	WAC 173-401-533(2)(q)	Uses less than two gallons per day
Boiler House Storage Tank 31G-D12: 6,000 gal 50% NaOH	WAC 173-401-533(2)(s)	Tanks, vessels, and pumping equipment, with lids or other appropriate closure for storage or dispensing of aqueous solutions of inorganic salts, bases and acids
Boiler House Storage Tank 31G-D11: 3,000 gal sodium sulfite	WAC 173-401-533(2)(s)	
Boiler House Water Conditioning Tanks 31G-D14, 31G-D15, 31G-C8, 31G-C7, 31G-C37A, 31G-C37B, 31G-C37C	WAC 173-401-533(2)(s)	
VPS Caustic Storage Tank	WAC 173-401-533(2)(s)	
POLY Caustic Storage Tank 5JD1	WAC 173-401-533(2)(s)	
Spent Caustic Tanks 301, 303, and 305	WAC 173-401-533(2)(s)	
Fresh Caustic Tanks 302 and 304	WAC 173-401-533(2)(s)	
EP Caustic Totes	WAC 173-401-533(2)(s)	
EP Acid Tank 9QD22: 6,000 gallons	WAC 173-401-533(2)(s)	
EP Caustic Storage Tank 9NQD 23	WAC 173-401-533(2)(s)	
Caustic Railcar Loading System	WAC 173-401-533(2)(s)	
Fresh Acid Storage Tanks 401 & 404: 42,000 gallons each	WAC 173-401-533(2)(s)	
Spent Acid Storage Tanks 402 & 403: 42,000 gallons each with nitrogen blanket for explosion control	WAC 173-401-533(2)(s)	
DCU Tank 15D-102 (slop oil/sour water system)	WAC 173-401-533(2)(s)	
Stormwater System	WAC 173-401-533(3)(d)	NPDES permitted ponds and lagoons utilized solely for the purpose of settling suspended solids and skimming of oil and grease
Spill Basin	WAC 173-401-533(3)(d)	

4.3 Public Docket

Copies of PSR's Air Operating Permit, permit application, and technical support documents are available online at www.nwcleanair.org or at the following location:

Northwest Clean Air Agency
1600 South Second Street
Mount Vernon, WA 98273-5202

4.4 Definitions and Acronyms

Definitions are assumed to be those found in the underlying regulation. A short list of definitions has been included to address those not previously defined.

An "applicable requirement" is a provision, standard, condition or requirement in any of the listed regulations or statutes as it applies to an emission unit or facility at a stationary source.

An "emission unit" is any part or activity of a stationary source that emits or has the potential to emit any regulated air pollutant.

A "permit" means for the purposes of the Air Operating Permit program an air operating permit issued pursuant to Title 5 of the 1990 Federal Clean Air Act.

"Technology-Based Emission Standard" means a standard, the stringency of which is based on determinations of what is technologically feasible considering relevant factors.

"State" means for the purposes of the Air Operating Permit program the NWCAA or the Washington Department of Ecology.

The following is a list of Acronyms used in the Air Operating Permit and/or Statement of Basis:

AMP	Alternative Monitoring Plan
AOP	Air Operating Permit
API	American Petroleum Institute
ASIL	Acceptable Source Impact Level
ASTM	American Society for Testing and Materials
Avjet	aviation jet fuel
BACT	best available control technology
BHU	Butadiene Hydrogenation Unit
BOHO	Boiler House
Btu	British thermal unit
BQ6	Benzene waste Quantity under 6 Mg/yr (wastewater)
CAA	Clean Air Act
CAM	Compliance Assurance Monitoring
CDHDS	Catalytic Distillation Technology Hydrodesulfurization
CEM	continuous emission monitor
CEMS	continuous emission monitoring system
CD	consent decree
CI	compression ignition (internal combustion engine)
CFM	cubic feet per minute
CO	Compliance Order
COB	carbon monoxide (CO) boiler
COM	continuous opacity monitor
CFR	Code of Federal Regulations
CRU	Catalytic Reforming Unit
DAF	Dissolved Air Flotation (wastewater)
DCU	Delayed Coking Unit
EFR	External Floating Roof (tank)
EP	Effluent Plant
EPA	Environmental Protection Agency
ERC	Emission Reduction Credit
ESP	Electrostatic Precipitator
FCAA	Federal Clean Air Act
FCCU	Fluid Catalytic Cracking Unit
FGR	Flue Gas Recirculation or Flare Gas Recovery
HAP	Hazardous Air Pollutants
HC	hydrocarbon
HHV	Higher Heating Value (heat content of fuel)
HON	Hazardous Organic NESHAP
HTU	Hydrotreater Unit

H_2S	hydrogen sulfide
H_2SO_4	sulfuric acid
hp	horsepower, brake
HRSG	heat recovery steam generator
HSR	Heavy Straight Run
ICE	Internal Combustion Engine
IFR	Internal Floating Roof (tank)
IHT	Isomerization Process Heater
ISO	International Standards Organization
kPa	kilopascals (10^3 pascals pressure)
LDAR	leak detection and repair
LNB	Low-NOx Burner
LEL	lower explosive limit
LPG	liquefied petroleum gas
LTPD	Long tons per day (imperial ton, 2,240 pounds)
MACT	Maximum Achievable Control Technology
MDEA	methyl-diethanolamine
Mg	megagrams (10^6 grams mass)
MMBtu	million British thermal units
MMSCFD	million standard cubic feet per day
MPCC	March Point Cogeneration Company
MPS	meters per second
MR&R	monitoring, recordkeeping, and reporting requirements
MTVP	maximum true vapor pressure
NIST	National Institute of Standards and Technology
NESHAP	National Emission Standards for Hazardous Air Pollutants
NOC	Notice of Construction
NO_X	oxides of nitrogen
NPDES	National Pollutant Discharge Elimination System
NSPS	New Source Performance Standard
NSR	New Source Review
NWCAA	Northwest Clean Air Agency
O_2	oxygen
OAC	Order of Approval to Construct
PM	particulate matter
PM_{10}	particulate matter less than 10 microns in diameter
$PM_{2.5}$	particulate matter less than 2.5 microns in diameter
ppmvd	part per million by volume, dry
ppmw	part per million by weight
psia	pounds per square inch absolute
PTE	Potential to Emit (annual, unless otherwise noted)
PRD	pressure relief device
PSR	Puget Sound Refinery
QA/QC	quality assurance/quality control
RCW	Revised Code of Washington
RICE	Reciprocation Internal Combustion Engine
RO	Regulatory Order (issued by the NWCAA)

RP&S	Receiving, Pumping, and Shipping
SCF	Standard cubic feet
SCFM	Standard cubic feet per minute
SCR	selective catalytic reduction
SEPA	State Environmental Policy Act
SOB	Statement of Basis (AOP)
SOCMI	Synthetic Organic Chemical Manufacturing Industry
SOP	Standard Operating Procedure
SR	straight run
SRU	Sulfur Recovery Unit
SIP	State Implementation Plan
SO_2	sulfur dioxide
TAB	Total Annual Benzene
TCLR	Train Car Load Rack
TGTU	Tail Gas Treating Unit
TPY (tpy)	Tons per Year
TTLR	Tank Truck Load Rack
TVP	True Vapor Pressure
ULNB	Ultra-Low NOx Burner (designed for ≤ 0.04 lb/MMBtu)
ULSD	Ultra Low Sulfur Diesel
VE	Visible Emissions
VPS	Vacuum Pipe Still (Crude Unit)
VOC	volatile organic compounds
VOL	volatile organic liquid
WAC	Washington Administration Code
WDOE	Washington Department of Ecology (Ecology)
WWSG	Waste Water Stripper Gas

APPENDIX A

AOP Changes in Previous Renewals

CHANGES TO THE AOP IN PREVIOUS RENEWALS

The Northwest Clean Air Agency (NWCAA) received Shell PSR's initial AOP application on June 7, 1995 and an update on December 17, 1997. The NWCAA issued the original AOP for PSR on November 26, 2002 (AOP 014).

This section provides a summary of changes to the permit and subsequent permit openings up until the current renewal. Changes during the current renewal and other permit openings that occur until the next renewal are addressed in the main text of the SOB (SOB Section 1.2). For further detail regarding the construction permit history or issued OACs, see the previous AOP SOB or specific permitting documentation.

Permit Revisions since Original Issuance

Significant Modification (AOP 014M1) – September 24, 2004

PSR submitted requests to modify the AOP on August 18, 2003, February 9, 2004, and May 3, 2004. The AOP was modified and re-issued on September 24, 2004 (AOP 014M1).

The permit was modified to incorporate OAC 772a (BHU), OAC 630a (HTU2), OAC 787b (HTU3) and OAC 828 (SRU4). Changes were made to include upgrades to the flare system consistent with the EPA's consent decree approved hydrocarbon flaring reduction plan as a method for meeting 1000-ppm SO2 limits for flares. And, 40 CFR 63 Subpart A requirements for flares were added to Section 5.10.

APPENDIX B

CAM Plan for Particulate Matter Grain Loading Limit at the FCCU/WGS

CAM Monitoring Plan for the FCCU PM10 grain loading limit
June 2013

1.0 WGS Particulate Emissions

Condition 1a of NWCAA OAC 623e limits the WGS Stack particulate emissions (PM-10) to 0.02 grains/SCF (basis dry, corrected to 7% O2).

During each annual WGS Performance Test, the actual WGS particulate emissions are measured as required by condition 2 of NWCAA OAC 623e.

From these WGS Performance Test results, the WGS particulate concentration (basis dry, corrected to 7% O2) is determined.

This baseline WGS particulate concentration is identified by the online computer tag **3WGSPM10BaselineDryPct7**, which is used when calculating PM-10 mass emissions.

*The value of **3WGSPM10BaselineDryPct7** will need to be updated annually with the results of the annual source test as follows*,

3WGSPM10BaselineDryPct7 = source test value (grains/SCF, basis dry, corrected to 7% O_2)

Condition 1b of the NWCAA OAC 623e limits the WGS Stack particulate mass emissions (PM-10) to 202 tons per rolling 12-month period. Condition 3 of NWCAA OAC 623e requires that PSR continuously calculate and determine compliance with the WGS PM-10 mass emissions. The PM-10 tons per year will be calculated using the most recent source test value, as described above, and are identified as the computer variable **3PM10WGS**. Its units are lb/hr:

3PM10WGS = (1000*3DryWGSStackFlowPct7)*(3WGSPM10BaselineDryPct7/7000)

Where **3DryWGSStackFlowPct7** is the continuously calculated variable for the WGS stack flow, corrected to 7% excess O2, in units of MSCFH.

2.0 WGS Efficiency Monitoring

Refinery MACT regulations use opacity as a surrogate parameter to show continuous compliance with the PM standards. Because the gases emitted from the WGS Stack are saturated with water vapor,

it is not practical to monitor stack emissions with an opacity meter. Therefore, the USEPA has approved an alternative monitoring plan (AMP) to demonstrate proper operating efficiency for the Puget Sound Refinery's WGS Stack.

The efficiency of the Wet Gas Scrubber will be monitored using the ratio of the Caustic Circulation to Inlet Flue Gas Flow. This same efficiency factor can be used to show continuous compliance with the 0.02 grain loading limit referenced in the previous section.

$$\textbf{L/G ratio} = \frac{\textbf{Volumetric liquid flow rate of the caustic stream to the gas scrubber}}{\textbf{Dry volumetric flow rate of gases to the gas scrubber}}$$

The EPA approved AMP has stipulated that the L/G ratio have units of measure of (gpm/mscfh) and given by the following equation,

3WGSLGRatio = 3FI366.pv/(3WGSFactorPerfTest*3DryWGSStackFlow)

where,

3FI366.pv is the measured volumetric flow rate of the caustic to the gas scrubber (GPM)

3DryWGSStackFlow is the calculated volumetric flow rate (dry basis) of the WGS Stack gases (MSCFH)

3WGSFactorPerfTest is a factor determined during the annual WGS Performance Test.

This factor is the ratio of two values for the dry WGS Stack gas flow(both in MSCF/HR).

The numerator is the value of the dry WGS Stack flow determined by the Stack Testing Contractor performing the Annual WGS Environmental Performance Test. The denominator is the average value of 3DryWGSStackFlow calculated by the PSR online system during the same time period used for the Environmental Contractor's calculation.

WGSFactorPerfTest is calculated from the annual Performance Test as follows:

$$\frac{\textbf{[Contractor Value of WGS Dry Stack Flow in SCF/Min]*60/1000}}{\textbf{Average Value of PSR Computer Tag "3DryWGSStackFlow" in MSCF/Hr}}$$

*Then the variable **3WGSFACTORPERFTEST** is updated annually in the online system.*

The minimum limit for **3WGSLGRatio** is established at the initial WGS Performance Test which establishes the minimum ratio needed to maintain compliance (compliance is based on a minimum value – a higher L/G ratio will provide better efficiency). If this tag reads below the minimum value an alarm will activate and plant personnel will take corrective action to prevent any deviation from the limit. Computer tags **3WGSLGRatio** and **3WGSLGRatioRoll3Hr** are used for continuous compliance monitoring.

3WGSLGRatio Minimum Limit = 0.93

APPENDIX C

Public Comments and NWCAA Responses

RESPONSE TO COMMENTS

The Northwest Clean Air Agency (NWCAA) accepted comments on the renewal of the Shell Puget Sound Refinery (PSR) Air Operating Permit (AOP) from February 18, 2014, through the end of NWCAA's public hearing on April 30, 2014. NWCAA received about 50 comments from the public and Shell PSR. This Statement of Basis (SOB) appendix provides verbatim and summarized comments, organized by topic, that NWCAA received during the public comment period, and responses.[1] Written comments received during the comment period and oral comments received during the public hearing are included and were considered equally. Note that the quoted comments are verbatim, including any typographical errors and misspellings, to faithfully represent the commenter's voice.

Document Organization

This document is organized in a comment-and-response format by topic. As such, when comment letters or paragraphs cover multiple topics, the responses are addressed in different sections. In addition, many comments fell into themes. NWCAA paraphrased these themes in italicized text in this response document and organized them by topic. NWCAA labeled quoted text with the commenter's name and did not italicize it. NWCAA's responses are labeled "*Response:*" and immediately follow each group of comments on that topic

In addition to repeating in different sections comments that cover multiple main topics, NWCAA has noted in parentheses section numbers where the commenter might find related or helpful information about secondary or sub-topics.

Attachments:

- **Attachment A** contains scanned copies of comments NWCAA received by the end of the public comment period.
- **Attachment B** contains the hearing transcript.

Table C-1 below lists the names of organizations and individuals who submitted a comment on the draft permit and where the response(s) can be found. Comments are grouped by topic and numbered.

Response categories are listed after the commenter index.

Table C-1: Commenter Index

Name	Response Number(s)
Kathryn Alexandra (email dated April 28, 2014)	2, 13
Anonymous (written comments at hearing April 30, 2014)	1, 2, 3, 6
Rev. Robert Anderson (oral comment at hearing April 30, 2014)	2, 4, 6
David Barts (oral comment at hearing April 30, 2014)	1, 2, 6, 7, 8, 9, 10, 11, 12, 13
Joline Bettendorf (letter dated March 9, 2014)	1, 6, 9
Rev. Dan Brezman (written comment at hearing April 30, 2014)	1, 3, 11, 12
Peggy Bridgman (oral comment at hearing April 30, 2014)	1, 2, 6, 7, 8, 9, 10, 11, 12
Jodie Buller (written comment at hearing April 30, 2014)	1, 2, 6, 7, 10, 11, 12, 13, 22
Tyler Campbell (oral comment at hearing April 30, 2014)	1, 2, 6, 7, 9, 10, 11, 12

[1] under WAC 173-401-700(9)

Name	Response Number(s)
Chiara D'Angelo (oral comment at hearing April 30, 2014)	1, 2, 6, 7, 8
Mike Dash (oral comment at hearing April 30, 2014)	1, 2, 6, 7, 9, 12
Ashlynn Dennis (oral comment at hearing April 30, 2014)	7, 8
Gena DiLabio (email received March 25, 2014)	1, 2, 6, 9, 10, 11, 12
Gena DiLabio (2nd email received March 25, 2014)	1, 2, 6, 9, 10, 11, 12
Gena DiLabio (letter dated April 27, 2014)	1, 2, 5, 6, 9, 10, 11, 12
Teresa Dix (letter dated April 27, 2014)	2, 5, 12
Andrea Doll, Evergreen Islands (letter received and orally presented at hearing April 30, 2014)	1, 2, 6, 7, 8, 9
Phyllis R. Dolph (email received April 29, 2014)	1, 2, 6, 9, 16
Ahmed Gaya (oral comment at hearing April 30, 2014)	8
Nina Hinton (email received March 13, 2014)	9, 22
Barbara J. Jackson (letter dated March 14, 2014)	1, 2, 3, 4, 6, 7, 9, 22
Jim Katrien (letter dated March 18, 2014)	1, 2, 6, 9, 13
Jennifer Keller (oral comment at hearing April 30, 2014)	1, 2, 6, 7, 9, 10, 11, 12, 13, 22
Kimberly LaDuca, 350 Seattle (letter dated April 30, 2014)	1, 2, 6, 7, 8, 9, 10, 11, 12, 13, 17, 18
Kimberly LaDuca, 350 Seattle (oral comment at hearing April 30, 2014)	10
James Leder (oral comment at hearing April 30, 2014)	9
Michael Mahaffey (letter received March 12, 2014)	2
Mary Manous (written comment at hearing April 30, 2014)	1, 2, 6, 20
Lisa Marcus (written comment at hearing April 30, 2014)	1, 2, 6, 7, 8, 9, 10, 11, 12, 13
Lisa Marcus (oral comment at hearing April 30, 2014)	6, 7, 8, 9, 10, 11, 12, 13
Margaret Moore (oral comment at hearing April 30, 2014)	1, 2, 6, 7, 9
Dan O'Connor (written comment at hearing April 30, 2014)	1, 2, 7, 9, 10, 11, 12, 13
Karen Powers (letter dated March 16, 2014)	1, 2, 6, 9, 12
Kaeley Pruitt-Hamm (oral comment at hearing April 30, 2014)	1, 2, 6, 7, 8, 9, 10, 11, 12
Laurie Rostholder, Seattle Raging Grannies (written comment received and performed at hearing April 30, 2014)	1, 2, 6, 20
Katherine Scott (letter received April 3, 2014)	1, 2, 6, 20
Shell PSR (email received April 25, 2014)	19
Deejah Sherman-Peterson (written comment at hearing April 30, 2014)	1, 2, 6, 8, 9, 20
Ronald A. Sherman-Peterson (written comment at hearing April 30, 2014)	2
Skagit Audubon Society (letter dated April 30, 2014)	2, 14, 15, 16
Sandra Spargo (oral comment at hearing April 30, 2014 and document received at hearing April 30, 2014)	1, 2, 6, 7, 8, 9, 22

Name	Response Number(s)
Tom Sperling (oral comment at hearing April 30, 2014)	9
Karen Tarr (written comment at hearing April 30, 2014)	2
Jonnie Vance (email received March 17, 2014)	1, 2, 3, 4, 6, 9
John Vieira (email received March 25, 2014)	20
Carlo Voli (oral comment at hearing April 30, 2014)	1, 2, 6, 7, 8, 9, 13
Leslie Wilder (oral comment at hearing April 30, 2014)	21
Jan Woodruff (email received March 27, 2014)	9

Response Categories:

General

1. Air Operating Permit Process
2. Scope of Air Operating Permit
3. Public Hearing
4. Environmental Impact Statement
5. Late Operating Permit
6. NWCAA Authority and Enforcement
7. Self-Reporting
8. Shell Puget Sound Refinery Non-Compliance
9. Refinery Emissions – Criteria and Toxics Pollutants

Air Operating Permit Requirements

10. Including GHG Emission Requirements in the Air Operating Permit
11. Greenhouse Gas Requirement Applicability (Chapter 173-407 WAC)
12. Refinery Greenhouse Gas Emissions
13. Regulating Crude Slate
14. Addressing Class I Areas
15. Reasonably Available Control Technology (RACT)
16. Good Air Pollution Control Practices
17. Compliance Monitoring Report under AOP Term 6.5.1 Only Required Every Five Years
18. Leak Detection and Repair (LDAR) Program Flaws
19. Shell Puget Sound Refinery's technical comments/edits
20. Use of Fossil Fuels Relative to Climate Change
21. Use of Alternatives to Fossil Fuel
22. Impact to Community

GENERAL

1. Air Operating Permit Process

Joline Bettendorf (letter dated March 9, 2014)

"Public health and safety standards are set in state and federal law (6). It is only reasonable to have systemized, monitoring and publicly accessible reports to assure that refineries meet these regulations consistently."

Jodie Buller (written comment at hearing April 30, 2014)

"Common sense. We need tracking of emmissions, we need to know what kind of oil the Puget Sound Refinery is burning, where it is coming from (13), and what pollutants are being emmitted into our common air."

Mary Manous (written comment at hearing April 30, 2014)

"I am concerned that not all appropriate regulations and policies exist that should be included in this Operating Permit for the Shell Refinery and that some do exist may not be adequately addressed (6). NWCAA should be more alert to the coming risks from the oil refinery as well as the transportation of oil through our state whether through this permit renewal or future PSD or other permits (2)."

Karen Powers (letter dated March 16, 2014)

"The requirements of the Air Operating Permit need to be reviewed to allow citizens of Washington State to determine the quality of the air shared by the citizens (9)."

Carlo Voli (oral comment at hearing April 30, 2014)

"The other thing I have issue with is you say this Air Operating Permit is only renewed every five years. We are at a time now where there's a lot of changes happening on a yearly basis, you know, the Shell refinery is refining tar sands bitumen from Alberta which contains a higher content of sulfur dioxide which increases asthma in the local communities, also it's more corrosive, so it's a danger, increases the danger to refinery worker themselves and there's plans to expand this feedstock at the refinery (9). And then we have the issue I know is not directly related to Bakken oil but there is a proposal to start taking and refining Bakken oil and we're starting to realize that during the unloading of these oil trains at the refinery so it would be a stationary situation, there's a lot of release of methane and other volatile gases such as benzene and other things (13). So that's an issue that needs to be considered. So if we're only going to, if they only have to renew their permit in five years when are all these new situations going to be considered and taken into account? So I really think it should be reviewed every year the Air Operating Permit (2)."

Response:

Thank you for your comments.

The federal Clean Air Act amendments of 1990 created the Air Operating Permit (AOP) program. The laws, rules and programs resulting from the Clean Air Act, including the AOP program, are intended to combat air pollution to preserve and protect people's health and the environment.

Regarding comments suggesting laws and regulations are inadequate, NWCAA must operate within and uphold existing laws, including in its work to carry out the AOP program. The agency does not have the authority to enact new laws. Efforts to impose stricter requirements and enact more stringent laws and regulations fall outside the scope of this AOP.

Regarding comments related to transporting oil through the state, NWCAA regulates stationary sources of air pollution. The agency doesn't have authority to regulate emissions from trains, or impose safety requirements related to oil transport. (See Response 6 for more information about NWCAA's authority.)

One purpose of the AOP program is to compile existing applicable requirements into a single document. This makes it easier for the source, the agency, and the public to determine what requirements apply to each piece of equipment, and to determine if the facility is in compliance with each requirement. Note that the AOP cannot permit increased emissions or new emission sources or projects, nor can the AOP require emission decreases.

AOPs are required to be renewed every five years, although NWCAA can re-open the permit for various reasons during the five-year term. All requirements and construction permits are in effect, and the air-pollution source must comply, regardless of the status of the AOP. If applicable requirements change between AOP renewals, the changed requirements apply even if NWCAA hasn't yet incorporated them into the AOP.

The AOP and the technical support document, called the Statement of Basis, are available to the public and posted on NWCAA's website. Among several other periodic reports, the AOP requires that sources report their emissions to NWCAA annually. With few exceptions as dictated by rule, all reports that sources submit to NWCAA are available for public review. If you would like to review any submitted information, feel free to send a request to PublicInformationRequest@nwcleanair.org, call us at 360-428-1617, or come into the office at 1600 South Second Street, Mount Vernon.

Because the above comments have not identified any material errors or omissions in the draft AOP, NWCAA did not change the draft AOP as a result of these concerns.

2. Scope of Air Operating Permit

Processing of Bakken crude and Alberta tar sands crude at Shell Puget Sound Refinery (PSR), and within Washington state in general, should be carefully reviewed, allowing for public involvement, if not prohibited altogether

Increased marketing of Bakken crude and tar sands oil will increase greenhouse gas emissions released to the atmosphere.

Transporting highly volatile Bakken crude oil by train is dangerous. The rail lines pass by populated areas, endangering thousands of people. Companies and refineries who operate these oil trains conduct poor monitoring, lax compliance, and non-adherence to requirements.

Response:

Thank you for your comments.

While the Shell Puget Sound Refinery (PSR) has applied for construction permits to build a rail terminal by which it could offload Bakken crude oil, the Northwest Clean Air Agency (NWCAA) has not issued construction permits for the proposed facility, and PSR has not built it. Because the Air Operating Permit (AOP) incorporates existing permits and applicable requirements related to air pollution into a single document, importing and processing Bakken crude by rail is outside the scope of the renewal of the Shell PSR AOP.

The public will have a chance to review and comment on the draft construction permit through a separate public process. If NWCAA issues a construction permit, it will be incorporated into the AOP when the AOP is next renewed.

NWCAA has authority to regulate air emissions from stationary sources. The federal Clean Air Act considers trains to be mobile sources. Therefore, NWCAA does not have jurisdiction to regulate their emissions. In addition, NWCAA does not have the authority to regulate or manage the rail lines or the safety of the rail system. As such, transporting Bakken crude by rail is outside the scope of the renewal of the Shell PSR AOP.

See Response 6 for more information about the laws and rules under which NWCAA operates.

See Response 13 for more information about regulating types of crude oil used by refineries.

Because the above comments have not identified any material errors or omissions in the draft AOP, NWCAA did not change the draft AOP as a result of these concerns.

3. Public Hearing

Anonymous (written comments at hearing April 30, 2014)

"The meeting time did not accomodate most working adults or college students."

Anonymous (written comments at hearing April 30, 2014)

"I think the Agency did a good job providing a good format for public comment."

Rev. Dan Brezman (written comment at hearing April 30, 2014)

"I appreciate the efforts of the Air regulatory committee to address this issue. However, a more inclusive understanding with broader strokes is needed (1). I.e. Greenhouse gases (11, 12). The public could be helped by a more comprehensive understanding, and then be able to make more informed contributions to this discussion. If you would like some specific examples please contact me. At this point, I feel that inadequate presentation of the "real" information has been given—that is understandable to a non-scientific minded group."

Response:

Thank you for your comments.

Though the hearing was scheduled in accordance with state requirements[2], we appreciate the input about when the hearing was scheduled, and will consider it as we schedule hearings in the future. The Northwest Clean Air Agency (NWCAA) values public participation and is open to suggestions about how to make public participation easier and more effective.

For those who wished to provide a comment, but were unable or did not wish to attend the hearing, NWCAA accepted written comments until the end of the hearing. NWCAA considers written and oral comments equally. The agency advertised the hearing and public comment period through required methods and beyond, including on the agency's website, in the State Register, by paid legal notice in the Skagit Valley Herald, by news release to regional media, and by social media.

The law requires NWCAA to offer an opportunity for a hearing that allows people to communicate their concerns and comments regarding new Air Operating Permit (AOP) and AOP renewals. NWCAA considers these comments prior to deciding whether to issue new or renewed AOPs. While NWCAA understands and appreciates public interest and concerns, the hearing was not intended to provide a detailed presentation about the specifics of the permit or permitting process, or a forum for discussion. If you wish to learn more about the Shell Puget Sound Refinery (PSR) AOP, permit process, Shell PSR emissions, or about NWCAA, you are welcome to call the agency at 360-428-1617, email info@nwcleanair.org, or stop by the office during agency hours. We are happy to discuss these issues in detail with individuals or groups that have an interest.

Because the above comments have not identified any material errors or omissions in the draft AOP, NWCAA did not change the draft AOP as a result of these concerns.

[2] WAC 173-401-800(4)

4. Environmental Impact Statement

Rev. Robert Anderson (oral comment at hearing April 30, 2014)

"I understand the limits to environmental – EIS statements very narrowly tailored and they don't cover a lot of ground. What worries me is that this is part of a much larger picture and needs to be seen as such. (6)"

Barbara J. Jackson (letter dated March 14, 2014)

"Big Money appears to be able to Buy whatever they want – to make more money – at the expense of human health and welfare – and even nature itself. That outrageous cost is too high!! It must not happen here in Skagit Valley! PLEASE insist on a public hearing, and widely publicize the date, time, and place(3)! REQUIRE a full EIS and strickest operating regulations for Shell Puget Sound Refinery(6)! We are depending on you for the very air we breathe! Thank you for all you are doing to maintain, protect, and preserve our Clean Air Quality(1, 2)!"

Jonnie Vance (email received March 17, 2014)

"I am requesting a public hearing concerning the Draft Air Operating Permit for Shell Puget Sound Refinery (3). I am very concerned about public health and safety (1, 6). We have a right to protect our air. We have a right to be heard. We need a full Environmental Impact Study.

We need a public hearing as part of a through ESI."

Response:

Thank you for your comments.

An environmental impact statement (EIS) can be a requirement of the Washington State Environmental Policy Act (SEPA) as part of some permit actions. However, SEPA review does not apply to decisions pertaining to the issuance, renewal, reopening, or revision of an Air Operating Permit (AOP).[3]

Because the above comments have not identified any material errors or omissions in the draft AOP, NWCAA did not change the draft AOP as a result of these concerns.

5. Late Operating Permit

Gena DiLabio (letter dated April 27, 2014) & Teresa Dix (letter dated April 27, 2014)

"For the past five years the refinery has been operating without a permit to control its air emissions."

Response:

Thank you for your comment.

Air Operating Permits (AOPs) are meant to be renewed every five years. The Shell Puget Sound Refinery (PSR) AOP is about five years behind schedule, partly because the applicable requirements have become more complex, and partly because of the Northwest Clean Air Agency's (NWCAA's) workload.

However, during that time, a fully enforceable AOP has been in place and in effect, uninterrupted, for Shell's operations. Further, all requirements, including emission control requirements, requirements from new permits, and new or revised regulations, have been in effect continuously for Shell PSR's operations.

Because the above comments have not identified any material errors or omissions in the draft AOP, NWCAA did not change the draft AOP as a result of these concerns.

[3] RCW 43.21C.0381

6. NWCAA Authority and Enforcement

Anonymous (written comments at hearing April 30, 2014)

"The need the public to be more aware of how these companies "rule" – Rights are mostly in their favor & the "little" people are ignored until uprising occurs (1, 2).

Laws & Regulations only happen when people become enraged over what is happening: Health care, Oil Com., Other Pollutors"

Mike Dash (oral comment at hearing April 30, 2014)

"Now we understand that the agency has specific prescribed boundaries over what it can do. It's time for those boundaries to be widened and so, in that context, the agency should be figuring out how to widen those boundaries, given that we live now in a time of real catastrophe. What we need is an agency that can help us meet that challenge. We have to have an agency that can help us meet that challenge and we very much hope that you will be that agency."

Andrea Doll, Evergreen Islands (letter received and orally presented at hearing April 30, 2014)

"Where is the regulation, exactly who is consenting to this? Is the northwest clean air agency representing the health of our community? Are they enforcing their own permits (2, 7)?

I address the Northwest Clean Air Agency:

Look again…reexamine, question and enforce"

Mary Manous (written comment at hearing April 30, 2014)

"To the extent NWCAA can more rigorously regulate the operations of the Shell refinery, I urge them to do so for safety and health of this climate (11, 12) and environment. To the extent that sufficient rules do not exist, I urge the Board and Managers of NWCAA and the state of Wash. Department of Ecology to pursue such policies and regulations."

Lisa Marcus (written comment at hearing April 30, 2014)

"I understand that you said that this permit simply compiles all existing permits and that you don't have authority to change or enforce more than you do. However it is time for stronger enforcement of much stricter regulations and no more business as usual."

Lisa Marcus (oral comment at hearing April 30, 2014)

"I'm Lisa Marcus from Seattle. And I understand that you said this permit simply compiles all existing permits and that you don't have authority to change or enforce more than you do. However, it's time for stronger enforcement and we need stronger regulations and no more business as usual. So as many people have already said, Shell has a long history of Clean Air Act violations (8)So somehow every agency needs to be trying to get more permission to do more, to change this system that isn't working. I want the Northwest Clean Air Agency to increase oversight of all air pollution emissions (7) including sources because different types of crude (13) are linked with different increases in emissions (9) and of greenhouse gases (10, 11, 12) as well because these affect the climate emergency we face and we must address them at every source. And really asking a federal agency to oversight everything that's going on locally doesn't make sense. We need to have the power locally to be looking at, to be publicizing and to be enforcing stronger regulations. Thank you very much."

Margaret Moore (oral comment at hearing April 30, 2014)

"So, you know, there are just so many ways for this to for us to look at this. And I would hope in some ways that your scope could be enlarged (1, 2). It just feels like you're in a very narrow place in terms of your abilities. And I think my last comment is that this is a very, just part of a very, very large question about our health, our wealth, our security on this earth and now it has a truly a moral side to it that we are sending, we are giving a legacy to our children and our

grandchildren that is not a pretty one at this point. In fact it's a pretty sad situation. So I just hope that you can hang in there and somehow either get the senate or the people or somebody to give you more oomph because I think you need it. It feels a little wimpy, maybe is my word. So hang in there and please don't be naïve. Thank you."

Response:

Thank you for your comments.

The Northwest Clean Air Agency (NWCAA) operates within a legal framework devised by the United States Congress and the Washington state Legislature. These elected representatives wrote the foundation laws (federal and state Clean Air Acts) under which we operate. We implement these laws and associated rules at the local level, but we cannot unilaterally expand our legal authority without a change to the governing federal and state laws.

With this authority comes the ability and obligation to enforce the rules for which we have responsibility delegated to us by the Environmental Protection Agency (e.g., Code of Federal Regulations, Washington Administrative Code, NWCAA Regulation, and NWCAA permits).

NWCAA does not have the authority to act beyond the limits and requirements of those laws and rules, even if such an action seems logical on its face or the public demands it. For instance, NWCAA does not have the authority to include certain greenhouse gas requirements in the Air Operating Permit (AOP). See Response 11 for further discussion regarding a specific case.

NWCAA greatly appreciates the support the public voiced for a strong local clean air agency. It is NWCAA's mission to preserve, protect and enhance air quality for the benefit of future and current generations.

Regarding requests for increased public awareness, NWCAA endeavors to provide the public with information about its work. Information is available on the agency's website at www.nwcleanair.org, and agency staff members are happy to provide detailed information about permits, the permitting process, emissions, and the agency. You are welcome to call NWCAA at 360-428-1617, email info@nwcleanair.org, or stop by the office during agency hours.

Regarding concerns about health and the environment, see Response 1 and Response 4.

Regarding Shell PSR's compliance history and NWCAA's enforcement, see Response 8.

Because the above comments have not identified any material errors or omissions in the draft AOP, NWCAA did not change the draft AOP as a result of these concerns.

7. Self-Reporting

David Barts (oral comment at hearing April 30, 2014)

"First of all, I find the whole issue of self reporting to be most concerning. Even with the auditing, I really can't consider it to be a process that is to be trusted. And the big picture enters the small picture (6). This is no hypothetical refinery that we're talking about. This is a refinery that wants to start processing diverse feedstocks including Bakken formation and Alberta tar sands crude oil (2, 13). And different feedstocks for refineries change the emissions and raise different issues with that (9). And so better and fully independent monitoring I think is crucial. Thank you."

Peggy Bridgman (oral comment at hearing April 30, 2014)

"Okay. I'm Peggy Bridgman from Bow, Washington. And I got this comment sheet outside and it contradicts what you have said I think pretty vastly. The first sentence says Shell, Shell's Puget Sound Refinery was the second most fined Clean Air Act violator in 2012 (8) and is a major source of greenhouse gas emissions in the Northwest (10, 11, 12). If that is the case, it sounds to me as though the reporting process that Shell has to go through with regard to its emissions

is tremendously lacking. And who made these rules anyway (1, 2, 6)? That allows the refineries to measure their own emissions?"

Jodie Buller (written comment at hearing April 30, 2014)

"Self-reporting is not an acceptable form of tracking. We need 3rd party agency oversight and regulating: what and how much, and at last to deny expansion plans (1, 2, 6)."

Tyler Campbell (oral comment at hearing April 30, 2014)

"I guess the one thing that I want to bring up to add some context to all this is just to think of kind of who we are dealing with. I understand that the individual members of Shell and CEOs may not all have been involved in history of Shell for its entire existence but I think it's good to know just kind of what we're dealing with and what this organization has created.

I was recently, actually it wasn't too recently let known that Shell is known as one of the insiders of a conflict in Bolivia that happened in I think it was 1970 that ended up which resulted in the deaths of more than 100,000 people. There was two oil companies, one in Bolivia and one in Paraguay Shell and I believe it was Texaco who helped to foment a war for control over an oil field there. And that's highly shocking to me and it's not perfectly closely related to exactly what we are talking about now but I feel like it's good to keep in perspective the kind of atrocities that can be committed by businesses when they are not regulated to the highest degree that we possibly can (1, 2, 6). So I'm only hoping that we realize that we cannot give any samplings of trust to these organizations that we have to have the highest levels of scrutiny possible in this because we're not only dealing with toxification of our environment (9) but we're dealing with the dignity of people who have been offended by these businesses in years past. And also climate change which is upon us (12). We just had a hurricane in the Philippines that killed more than 7000 people. These are huge, huge things that we have to deal with and keep in our minds when we're dealing with these issues and I would urge you guys to keep this in mind when you're dealing with the regulation of our local refinery."

Mike Dash (oral comment at hearing April 30, 2014)

"Thank you. My name is Mike Dash. I'm here from Seattle and thank you for the opportunity to comment. We know from the media that Director Asmundson has wanted to help us adjust our expectations and I take that as a kindness and a courtesy and I assume that you're hoping that we have adjusted our expectations downwards for this hearing. I'm here to ask that the agency adjust its expectations upwards (1, 2, 6). The reason being that climate change is not an impending future problem. Climate change is on us now the droughts and the floods and the storms and wildfires are already happening (12). They're only going to get worse. And that means that we're living in a new context now. We're living in a context of global catastrophe. I don't use that word lightly. What it means is that everything the agency does and every permit that you issue should be examined in that context specifically in the case of the Shell permit. That means agency oversight, not self-reporting and it means a sharp reduction in emissions is called for (1, 2, 9)."

Ashlynn Dennis (oral comment at hearing April 30, 2014)

"I want to start by quoting an inspiring young man I watched at a poetry slam contest. And he said, the victors of a rigged game do not deserve to make the rules. And it was profound. He was actually speaking about education but I think that it's very appropriate in this very same situation. How can we expect a major corporation who basically answers, they do answer to you guys but they self regulate and put out their own estimations or measurements of how much they're actually putting out there. How can we actually expect a corporation who makes their money off of the continued refinement of the same materials to actually give us an accurate description of what they're doing there? They are the number two violator in 2012 (8) it's just kind of shocking to me that there isn't more accountability that there isn't someone that is there saying, okay, well, you lied to us before, are you going to do it again? Instead we wait, we wait for them to do it again and then we fine them same as she was saying earlier. Sorry, I forgot

your name. It was really a very excellent analogy talking about the pattern of abuse. And that is really exactly what it is we cannot expect these people to continue to redeem themselves publicly, pay a fine and then not commit the same atrocity because what is it to them to pay another fine? It's always going to be the same and they can continue to afford doing so because we are allowing them to do it. Thank you."

Jennifer Keller (oral comment at hearing April 30, 2014)

"Yes, I'm Jennifer Keller. I live in Bellevue and I'm speaking for myself. I'm also part of 350 Seattle but I'm speaking for myself. So Shell's Puget Sound refinery was the second highest clean air violator as the previous speaker was saying. The second highest clean air violator in 2012 (8). It's a major emitter of greenhouse gas emissions in our area. And this does not give me a lot of confidence in Shell and its commitment to clean air. And given that it seems to me that Shell should not be allowed to self report its emissions. It does not appear to have a commitment to clean air. And I'll say this even though I'm not sure how it fits in the whole picture but we all know about the importance of greenhouse gases and how important it is for us to understand how we are progressing toward reducing emissions (9, 10, 11, 12). So to even get started on that, the permit should require emitters to track their emissions and Shell's permit should require this (1, 2, 6)."

Kimberly LaDuca, 350 Seattle (letter dated April 30, 2014)

"As discussed above, allowing PSR to self-conduct compliance monitoring given PSR's continuous state of non-compliance with the CAA is unacceptable (8)."

Lisa Marcus (written comment at hearing April 30, 2014)

"Shell has a long history of clean air act violations (8). Self-reporting by a known violator should <u>not</u> be allowed even with some 3rd party oversight, because the cost for every violation is too high in terms of immediate health impacts (9) and climate impacts (10, 11, 12)."

Lisa Marcus (oral comment at hearing April 30, 2014)

"Self reporting by a known violator (8) should not be allowed even with some third party oversight because the cost of every single violation is too high both in terms of our health (9), immediately and also long term effects in terms of climate change (10, 11, 12). The time for business as usual is over."

Margaret Moore (oral comment at hearing April 30, 2014)

"I had a nice tidy little talk all put together and after listening to all this, I am just feeling a bit emotional and I can't remember a thing I was going to say. However, it does seem rather naïve to trust Shell or other oil companies or other big businesses to always to really report truthfully what's going on. In my understanding of human nature, that's not usually the case. I think there are many ways that this I know your permit is somewhat narrow and it was to do with the clean air that the fact that the trains are coming and it's part of the whole scene and there are many, many variables, many ways we're being affected by this process (1, 2, 6, 9). I just want to mention a couple little ones."

Dan O'Connor (written comment at hearing April 30, 2014)

"I am very concerned that the changing sources of crude oil that are arriving at this refinery (13) will have greater emissions (9) of green house gases (10, 11, 12). Can we be sure that the emissions from this refinery will be the same or lower if we are relying on the permittee to self-report?"

Sandra Spargo (oral comment at hearing April 30, 2014 and document received at hearing April 30, 2014)

"My name is Sandra Spargo and I live in Anacortes. Can we trust Shell oil to comply with air pollution laws (8)? In Alaska in 2014, a coast guard investigation found that the reason that Shell's drill ship had left Dutch harbor was to avoid Shell pay millions in Alaska State taxes on oil

and gas properties. In Alaska, Shell paid $1.1 million in fines for air quality violations. Shell oil and affiliated partners agree to spend at least $115 million to control harmful air pollution from industrial flares and other processes and by paying a $2.6 million civil penalty. Shell agreed to spend $1 million on a state of the art system to monitor benzene levels.

In October 2012, a rancid odor swept over Anacortes and the Northwest Clean Air Agency received approximately 70 complaints (8, 9). The odor was coming from the waste water treatment facility at the Shell oil refinery. In 2010 two Shell subsidiaries were forced to pay $3.3 million in civil penalties and spent $6 million to install pollution reduction equipment at refineries in Louisiana and Alabama. In 2008, a lawsuit against Shell alleged more than 1000 occasions from 2003 to 2006 whereby emissions extended hourly limits at the Deer Park facility in Texas. Records show that Shell emitted more toxic compounds in a single day than its permits allowed in an entire year. The lawsuit was settled for $5.8 million in April 2009. Shell's fines in five years of $291,000 made the refinery the number two most fined Clean Air Act violation in the Northwest (8). In 2008, the Environmental Protection Agency classified the Anacortes Shell Refinery is a high priority violator.

Can Shell oil be trusted to comply with air pollution laws in Skagit County? Does the Northwest Clean Air Agency and local, county, state, and tribal governments, have the will to insist that Shell oil comply with more stringent air pollution laws (1, 2, 6)? Or will Shell commit air operating violations termed nuisance odors, pay its fines, and continue profitable and polluting ways? The cities of Burlington and Mount Vernon in Anacortes are currently going through their process of envisioning what they want their counties to look like. An oil spill, oil pollution, all these connected will destroy these communities (22), their reputation and I think you people would remember this area for the refineries more than for its beauty. Thank you."

"Can We Trust Shell Oil to Comply with Air Pollution Laws?" & "Shell Oil: A Record of Environmental and Corporate Malfeasance," Alaska Wilderness League, June 2012.

Carlo Voli (oral comment at hearing April 30, 2014)

"And like others have said, this whole issue of self reporting, Shell is not trustworthy, has never been trustworthy. Even with third party audits, et cetera. So that should change. Thank you."

Response:

Thank you for your comments.

Air Operating Permits (AOPs) must contain compliance certification, testing, monitoring, reporting, and recordkeeping requirements sufficient to assure compliance with the terms and conditions of the permit. The Northwest Clean Air Agency (NWCAA) determined that the Shell Puget Sound Refinery (PSR) AOP satisfies this requirement.

Several commenters objected to the AOP relying on self-monitoring and self-reporting by Shell PSR, noting that Shell has been cited for violations of applicable requirements. The AOP regulations rely on permitted air pollution sources self-monitoring and self-reporting their monitoring results to the permit authority – in this case NWCAA – semi-annually. To provide greater confidence in the reported results, the regulations require that the accuracy of those results be certified by a senior company official. The senior official must be at a level that has the authority to influence day-to-day operations of the facility. The regulations also require sources to promptly report any deviation from permit requirements. In addition to reporting monitoring results semi-annually, the regulations also require that a senior company official annually certify the source's compliance with the applicable requirements of the source's AOP, including whether compliance was continuous or intermittent, and to identify the methods used to determine compliance.

Not all monitoring required by the permit is conducted by the company. The permit requires Shell PSR to have a third party conduct source tests on a regular basis for emissions of nitrogen

oxides and particulates from a number of emission units.[4] Also, the refinery is required to have a third party determine the accuracy of its continuous emission monitors on a regular basis. The permit also reserves NWCAA's authority to conduct, or require that a third party to conduct, a source test for other pollutants and on other emission units if the agency believes such a test is necessary to determine compliance.[5]

In addition, NWCAA does not take the data reported by sources at face value. Periodically, NWCAA confirms the submitted information by reviewing raw data from continuous emission monitors, maintenance records, quality control/quality assurance information, emission and other compliance calculations, and operating parameter monitoring. In addition, NWCAA reviews the reports from the required third-party emission testing and can go into the field and observe the tests in person.

Regarding tightening the emission limits and requiring additional monitoring due to Shell PSR's past violations, NWCAA implements the laws and regulations that come from the Clean Air Act (federal and state), Code of Federal Regulations, Washington Administrative Code, and NWCAA Regulation. The requirements from these laws and regulations do not change if the facility has past violations.

See Response 6 for more information about the laws and regulations under which NWCAA operates and the agency's authority.

See Responses 1 and 2 for more information about the purpose of the AOP.

See Responses 9, 10, 11 and 12 for more information about refinery emissions and greenhouse gas emissions.

Because the above comments have not identified any material errors or omissions in the draft AOP, NWCAA did not change the draft AOP as a result of these concerns.

8. Shell Puget Sound Refinery Non-Compliance

David Barts (oral comment at hearing April 30, 2014)

"Hello. My name is David Barts. I'm from Bainbridge Island like a number of people here. No, I'm not local but I am indeed downwind especially on days like we're having today which are warm sunny days. What tends to happen is the air heats up in the Puget Sound Basin that draws in cold marine air through the Strait of Juan de Fuca; it turns the corner around the Olympic Peninsula and heads south. So there is going to be northerly winds this afternoon if it's like a typical warm day and that would make Seattle and Bainbridge Island downwind from this refinery (9). And I am with Rising Tide Seattle. We are a group that exists to question the root causes of climate change (10, 11, 12) and environmental destruction and, put briefly, those root causes are basically business as usual in all its forms. And with all due respect, this what we are doing today here is part of that business as usual. It's endless, small, narrowly-focused studies and permits (1, 2) and none of them address the big picture (6). And I'm mainly here to tell that truth which is that to paraphrase something folk singer Utah Phillips once said: The earth is not dying; the earth is being killed and the people doing the killing have names and addresses. But, with respect with this small picture, I do have a few things to say."

Chiara D'Angelo (oral comment at hearing April 30, 2014)

"Hi. My name is Chiara D'Angelo and I'm going to tell a story because I think that is something that I can really best. So my mom was the top social worker in the state growing up. She's a single mom and she went into the most difficult situations and most of them were on the local reservations. I met one of her clients and I had to ask my mom why people would hurt other people. And we had a very memorable conversation and I had a difficult time understanding the

[4] Aee AOP Terms 5.1.10, 5.1.11, 5.2.1, 5.3.12-5.3.14, 5.5.2. 5.7.1, 5.7.8, 5.7.18, 5.7.19, 5.9.23

[5] See AOP Term 2.1.8

dynamic between this girl and her parents. So she explained to me the cycle of abuse reluctantly but she had to because I was asking questions that she had to answer. And she explained that when people hurt and violate others, they genuinely seek redemption and then so they hurt and violate others and then they are distant and they face punishment and they can feel their wrong and then they seek redemption and the redemption is genuine and it's business as usual. And it goes back to a healthy relationship until they are caught again for abuse.

And in that way abuse is cyclical and I point this out because the Shell refinery is in a very similar cycle of abuse and we can enable it. Unfortunately, so basically they're violating the clean air act right? And then they pay lawsuits and then they seek redemption from the community. And the redemption is genuine. They genuinely want the community's support. They're good – you are all good people but we can't enable them anymore. So we need to regulate the self reporting and that needs to be strict (7). We can't allow any more violations and we can't allow this cycle of abuse to continue. It's not okay. The regulatory process is failed (1, 2). This cannot keep happening. I am, I believe in, I want to believe in the system but if these lawsuits keep going through, then clearly there's a failure in the system and we need to fix it and we need, this needs to be the intervention. Here today is the intervention. We need to stop and we need to go through whatever that looks like but that's what I have to say. So thank you.

. . . We can't fix the problem with lawsuits because the refinery is subsidized. So the lawsuits aren't actually a clear pattern, like it can't be a system of like punishment, redemption, violation-punishment-redemption. We have to stop this cycle. So that looks like stopping the violations, not stopping the lawsuits. The lawsuits are very important but stopping the violations before they start regulating. So stronger regulations is what that would look like (6)."

Ashlynn Dennis (oral comment at hearing April 30, 2014)

"I want to start by quoting an inspiring young man I watched at a poetry slam contest. And he said, the victors of a rigged game do not deserve to make the rules. And it was profound. He was actually speaking about education but I think that it's very appropriate in this very same situation. How can we expect a major corporation who basically answers, they do answer to you guys but they self regulate and put out their own estimations or measurements of how much they're actually putting out there (7). How can we actually expect a corporation who makes their money off of the continued refinement of the same materials to actually give us an accurate description of what they're doing there? They are the number two violator in 2012 it's just kind of shocking to me that there isn't more accountability that there isn't someone that is there saying, okay, well, you lied to us before, are you going to do it again? Instead we wait, we wait for them to do it again and then we fine them same as she was saying earlier. Sorry, I forgot your name. It was really a very excellent analogy talking about the pattern of abuse. And that is really exactly what it is we cannot expect these people to continue to redeem themselves publicly, pay a fine and then not commit the same atrocity because what is it to them to pay another fine? It's always going to be the same and they can continue to afford doing so because we are allowing them to do it. Thank you."

Andrea Doll, Evergreen Islands (letter received and orally presented at hearing April 30, 2014)

"Shell Oil who has been out of compliance for decades, (12 of the last 12 quarters) who has been paying token fines, wants consent to continue to emit these chemicals and more (1, 2, 6, 9)."

Ahmed Gaya (oral comment at hearing April 30, 2014)

"Well, my name is Ahmed Gaya. I live in Seattle. And just before we begin I just want to acknowledge that I am a settler and a colonialist here participating in a colonial government on occupied Skagit territory. I just want to start with that. I think someone should acknowledge that. And my comments might not be specifically helpful along the permit but they might be helpful to help understand the character of what's going on in the movement that's building in

this community in the room and why folks are so concerned. And the first thing is just that we keep talking about the fact that Shell is, you know, in 2012, the second most fined violator of the Clean Air Act in the Northwest, that in recent years Shell has repeated violations of its permits and that shows that the regulation is working. I think one of the other things that I think that it shows to a lot of people in this room is that violating their permits is built into Shell's business model. And then that kind of fundamental principle is really concerning and alarming and leads to the distrust of this process and the distrust of this company. And are we supposed to use our hands I think to agree so if you all agree with me if you can just put their hands up, cool, yeah. So I think visually that's where a lot of these folks were coming from."

Kimberly LaDuca, 350 Seattle (letter dated April 30, 2014)

"III. For the Last Three Years (since 04/01/2011) PSR has Continuously Violated the CAA

Shell is a designated a 'High Priority Violator' by EPA which categorizes PSR's "current compliance status" as one of "Serious Violation(s)." Shell PSR was been in "Significant Non-compliance" with the CAA continuously for the past three years. Since 2007, the last time Shell PSR's AOP was "reviewed," it has continuously been the second biggest Clean Air Act violator in the Pacific Northwest. Shell PSR has a clear historical pattern of disregarding its' AOP and operating its' refinery in a manner which is illegal under federal and state law. For example, in the five-year period spanning 2005 to 2010, Shell was fined $291,000 for CAA violations, received sixteen notices of violation and was subject to fifteen formal enforcement actions.

None of the Compliance Monitoring in the AOP has changed to reflect the fact that PSR owner/operator conducted testing does not reflect reality. PSR reports allege that it has always passed and been in-compliance every time it conducted monitoring tests. It is highly unlikely, if not impossible, that a facility could pass every test conducted as part of their Compliance Monitoring, yet at the same time be in a state of continuous "significant non-compliance." It is clear that PSR is not capable for conducting its own Compliance Monitoring. Given the fact that PSR has failed to comply with the CAA on a continuous basis in the past three years, it is unacceptable that there is no change to the frequency of inspections, monitoring or reporting requirements in the Draft AOP (1, 2, 6, 7)."

Lisa Marcus (oral comment at hearing April 30, 2014)

"I'm Lisa Marcus from Seattle. And I understand that you said this permit simply compiles all existing permits and that you don't have authority to change or enforce more than you do. However, it's time for stronger enforcement and we need stronger regulations and no more business as usual (6). So as many people have already said, Shell has a long history of Clean Air Act violations. Self reporting by a known violator should not be allowed even with some third party oversight because the cost of every single violation is too high both in terms of our health, immediately and also long term effects in terms of climate change (10, 11, 12). The time for business as usual is over. So somehow every agency needs to be trying to get more permission to do more, to change this system that isn't working. I want the Northwest Clean Air Agency to increase oversight of all air pollution emissions including sources because different types of crude are linked with different increases in emissions (9) and of greenhouse gases as well because these affect the climate emergency we face and we must address them at every source. And really asking a federal agency to oversight everything that's going on locally doesn't make sense. We need to have the power locally to be looking at, to be publicizing and to be enforcing stronger regulations. Thank you very much."

Kaeley Pruitt-Hamm (oral comment at hearing April 30, 2014)

"So I know that there are some strong emotions that have been expressed in this during this hearing and I do want to thank you not in a way that excuses any of the bad systemic things that are going on but thank you because I know that all of us in this room really have the best of intentions including people at Shell who work at the refinery and people who are CEOs. This is not about pointing fingers and saying oh, you should be a better person because you're an evil CEO and we need to make sure that you just change your mind and decide to be good. We need

to make sure that we have incentive structures so that we make it expensive enough whether that's economically or based on their reputation (6). We need to make it a reputational hazard for Shell to continue operating – to be operating in the way that it is which is basically a slap on the hand system that I see. And maybe you do monitor the emissions in your own ways sporadically but that is not enough, that is not enough (7, 9). I mean having Shell continuously emit too much and then say, Oh! This is what we did. Oh! Okay, we'll pay the fine. And then again Oh! This is what we did. Oh! Okay we'll pay the fine. That's an incentive structure that does not work. And if Shell has continuously emitting (9) and contributing to this global climate change (10, 11, 12) that my generation and our generations to come are going to have to deal with in horrible ways, then we can't have that system. We can't let that happen and that's a systemic change that needs to happen. We're not pointing fingers at the people. We're pointing fingers at this problematic system of incentive structures (1, 2, 6). Thank you."

Sandra Spargo (oral comment at hearing April 30, 2014)

"My name is Sandra Spargo and I live in Anacortes. Can we trust Shell oil to comply with air pollution laws? In Alaska in 2014, a coast guard investigation found that the reason that Shell's drill ship had left Dutch harbor was to avoid Shell pay millions in Alaska State taxes on oil and gas properties. In Alaska, Shell paid $1.1 million in fines for air quality violations. Shell oil and affiliated partners agree to spend at least $115 million to control harmful air pollution from industrial flares and other processes and by paying a $2.6 million civil penalty. Shell agreed to spend $1 million on a state of the art system to monitor benzene levels.

In October 2012, a rancid odor swept over Anacortes and the Northwest Clean Air Agency received approximately 70 complaints (9). The odor was coming from the waste water treatment facility at the Shell oil refinery. In 2010 two Shell subsidiaries were forced to pay $3.3 million in civil penalties and spent $6 million to install pollution reduction equipment at refineries in Louisiana and Alabama. In 2008, a lawsuit against Shell alleged more than 1000 occasions from 2003 to 2006 whereby emissions extended hourly limits at the Deer Park facility in Texas. Records show that Shell emitted more toxic compounds in a single day than its permits allowed in an entire year. The lawsuit was settled for $5.8 million in April 2009. Shell's fines in five years of $291,000 made the refinery the number two most fined Clean Air Act violation in the Northwest. In 2008, the Environmental Protection Agency classified the Anacortes Shell Refinery is a high priority violator.

Can Shell oil be trusted to comply with air pollution laws in Skagit County? Does the Northwest Clean Air Agency and local, county, state, and tribal governments, have the will to insist that Shell oil comply with more stringent air pollution laws (1, 2, 6)? Or will Shell commit air operating violations termed nuisance odors, pay its fines, and continue profitable and polluting ways? The cities of Burlington and Mount Vernon in Anacortes are currently going through their process of envisioning what they want their counties to look like. An oil spill, oil pollution, all these connected will destroy these communities (22), their reputation and I think you people would remember this area for the refineries more than for its beauty. Thank you."

Carlo Voli (oral comment at hearing April 30, 2014)

"So yeah. My name is Carlo Voli and I'm in Edmonds, Washington. And you were stating that the air quality in Anacortes and Mount Vernon is actually very good but those two larger urban centers are not downwind from the refineries. So the question is what the air quality downwind such as in Guemes Island and Bayview and other places like that (7, 9)? And the other thing is I've learned recently that the refineries, the Shell refinery, I'm sure the other refineries do as well, have controlled explosions and flare-ups quite often on a daily basis (9) and that's when they are out of compliance with the air quality standards (1, 2) and they just pay their fines and that seems to be the business as usual and is that really okay that that be business as usual. Then, engaging in illegal activity, paying their fine and, you know, just continuing to do that so I think that needs to be revised (6)."

Response:

Thank you for your comments.

While we appreciate your concerns, changes to the legal framework that authorizes the Northwest Clean Air Agency (NWCAA) to respond to violations are outside the scope of the renewal process of the Shell Puget Sound Refinery (PSR) Air Operating Permit (AOP).

That being said, Shell PSR does have a compliance history that includes air quality violations for which NWCAA has taken enforcement action and resolved within that legal framework.

Several people commented on Shell PSR's status as a high priority violator. The U.S. Environmental Protection Agency (EPA) implemented the High Priority Violation program to help enforcement agencies prioritize enforcement efforts. If a violation qualifies as a high priority violation, EPA monitors the progress of the enforcement action to ensure the enforcement was timely and appropriate. EPA provided a list of categories of noncompliance issues that qualify as high priority violations. Note, however, that these categories are not necessarily set based on amount of excess emissions or length of time of exceedance. Certain categories have no minimum emission threshold so any emissions over the limit is considered a high priority violation.

Regarding Shell PSR's ranking for fines, NWCAA is not the source of such ranking. The agency does not compare the number of penalties issued to, or the amount of fines paid, by one air pollution source to the number of penalties issued to, or the amount of fines paid, by another pollution source. Each facility is different in terms of equipment, operations, and emissions. Ranking whole facilities' compliance history against each other is not useful in the agency's consideration of permit applications, requirements, or enforcement actions.

Also, it is essential that NWCAA apply its authority to pursue enforcement actions as consistently as possible. The goal of NWCAA's enforcement program is compliance.

Because the above comments have not identified any material errors or omissions in the draft AOP, NWCAA did not change the draft AOP as a result of these concerns.

9. Refinery Emissions – Criteria and Toxics Pollutants

Joline Bettendorf (letter dated March 9, 2014)

"Puget Sound Refinery requests an Air Operating Permit from NWCAA. If unmonitored a long list of regulated air quality pollutants have the potentional to seriously impact this regions air quality negatively. I live downwind of the refineries at March Point and noxious pollutions could reach my neighborhood in minutes, but air pollutants disburse widely, affecting air quality over wide areas, not just the source of emissions."

Tyler Campbell (oral comment at hearing April 30, 2014)

"So yeah, my name is Tyler Campbell and I go by Ty Campbell and I'm from Bellingham. I've lived in the area my entire life since I was a little kid playing in these waters. And I've learned a whole lot at this hearing that Skagit that has one of the top cancer rates in all of Washington is shocking to me knowing that it has a huge refinery, pretty much smack dab in the middle of it. Not to mention somebody said 64 million tons of benzene in the last eight years. That is a lot of a very toxic substance entering our airways due to this refinery that we are talking about the regulation of today. But beside those smaller points that have kind of – I feel like stressed me out a little bit, made me a little emotional right now. I guess the one thing that I want to bring up to add some context to all this is just to think of kind of who we are dealing with. I understand that the individual members of Shell and CEOs may not all have been involved in history of Shell for its entire existence but I think it's good to know just kind of what we're dealing with and what this organization has created."

Gena DiLabio (email received March 25, 2014)

"Please deny the Shell Refinery at March Point the required Air Operating Permit for which they are applying. (1, 2, 6)

The toxic emissions they will emit if granted this permit are hazardous to public health and will contribute to global climate change (10, 11, 12)."

Andrea Doll, Evergreen Islands (letter received and orally presented at hearing April 30, 2014)

"According to WA STATE Cancer Registry Statistics, Skagit County has a 41% higher rate of bladder cancer, 38% higher rate of melanoma, 35% higher rate of leukemia than the rest of the State of Washington.

Puget Sound Refinery is required to have an air operating permit because it emits more than:

100Tons of "particulate matter"
10 tons of combined hazardous air pollutants
25 tons of single hazardous air pollutants
100,000 tons of carbon dioxide equivalents and…100 tons of greenhouse gases

In this mix is 56 tons of benzene a known chemical associated with cancer-was put into the air between 2003 and 2011

The International Agency for Research on Cancer has classified outdoor air pollution as carcinogenic to humans"

Phyllis R. Dolph (email received April 29, 2014)

"The air which goes out from the Anacortes Shell Refinery is already polluted as anyone who travels Route 20 knows, and as we who live in the city of Anacortes know. We smell it. Furthermore, the air frequently blows over to Guemes Island. I would not want to live where Guemes residents are impacted and where out of proportion numbers become ill with cancer. Furthermore, polluted air travels as far as Bellingham and into our mountains besides here locally.

Please ensure that the Air Operating Permit for Shell is defined, enforced, and monitored carefully."

Jim Katrien (letter dated March 18, 2014)

"If the Shell refinery in Anacortes cannot operate without emitting these huge amounts of pollution, it should no longer be given an air operating permit, and should be closed (1, 2, 6). The links between air pollution and higher risks of disease are evident. Higher risks of asthma and cancer in Skagit Valley are probably related. As evidenced by the most recent spill at Shell, accidents happen. And in replacing Alaskan crude with Bakken crude even more will (13)."

James Leder (oral comment at hearing April 30, 2014)

"Hi. So my name is James. I'm from the Bellingham, I'm a Bellingham community member. And I just like to address two things you said and you're – actually it was you that said them I believe, I don't remember who said them.

Yeah. So first you said that "Washington has consistently excellent air" "we enjoy consistently excellent air quality in this state" and you also said that, you also pointed out that there has been a 70% decrease in emissions in Shell refineries since 2001. I would just like to address the significance of those two things. So Washington State is ranked among the 12 highest states in the US for overall cancer rates and according to the Washington State Cancer Registry cancer rates are significantly higher in Western Washington than in Eastern Washington. Among the 39 counties of Washington State, Whatcom, Skagit, Pierce and Grays Harbor are all ranked top five highest cancer rates. Do you think it's a coincidence that those are all the communities with oil refineries in them? The fact that Shell's refinery has decreased its emissions by 70% doesn't

mean it's not still pumping out toxic chemicals 24 hours a day which as we just heard includes 56 tons of benzene in the last eight years. They are poisoning our air, water and land. Although everyone in this room breathes this air, the indigenous peoples including Lummi, Swinomish, Quinault, Puyallup who have, whose all land we collectively inhabit and whose land these oil refineries are on, specifically March Point which is stolen land. These are the ones that bear the brunt of Washington State's toxic energy infrastructure. They are the ones who are having their subsistence culture jeopardized. And they are the ones who don't give a damn about a 70% decrease in emissions since 2001 because they still can't eat the fish that they've been eating for – since time immemorial because it's giving them cancer. Well they still eat it but they're just getting cancer and that's all I'd like to say."

Karen Powers (letter dated March 16, 2014)

"In addition, particulate pollution, and the increase in bronchial disease must be taken into consideration. Public health care is increased by particulate pollution. The added cost to society as well as to individuals must be addressed.

Washington prides itself in being eco-friendly. This Permit will allow for more pollution than is acceptable to Washington Citizens (1, 2, 6)."

Tom Sperling (oral comment at hearing April 30, 2014)

"Hi, I'm Tom Sperling. And I'm going to date myself a little bit here. I think I'm 46 but I started working in air pollution in the LA basin in 1969. And I've done air pollution work all over the world. Refineries, doesn't matter what it is called. I moved here because the doctor said I should probably get out of the LA basin and I should quit working in refineries. I came here because it's some of the cleanest refineries around. And that's because you keep fighting them and I appreciate that very much. And you all are doing a good job and I've done comparisons to other refineries across the country and the Northwest actually has the most cleanest refineries there are. So I thought I would go through a couple, some numbers here and basically Shell, because of you, have reduced their output by 5700 tons you've gone from 8600 tons down to 2900 tons in 13 years which means in 10 years you're going to have net zero. You know, you're moving as fast as you can. You're using the best available technology. You know, it's amazing that you've reduced it this much compared to other places. And I commend the Port of Anacortes because they do export the coke and the sulfur and they've done a great job. Even the railroad has done a great job. They export products out of here; they import I don't know what. You know and the thing is we need the energy to keep moving forward with the sustainable energy like wind, solar, et cetera, as it takes 10 years of driving an electric car before you use up the carbon footprint that it took to build the car. You know, and I do this in other meetings you know. How did we all get here? Did we come by a bus, train, ferry, cars, airplane? You know, how do we get supplies, clothing, furniture, everything else that we get? It's fuel. To the best available technology there is a device that's being used now on buses, on diesel trucks, generators, cars and boats that completely eliminates the emissions from diesel. I'm talking about emissions or? Oh, I'm sorry.

And finishing there is now also a device that eliminates CO2. So it's going to break the greenhouse gases. So thank you."

Jonnie Vance (email received March 17, 2014)

"It has taken much effort to set any air quality standards. We surely cannot afford to lower those standards we have now. In fact, we need to raise those standards (1, 2, 6)."

Carlo Voli (oral comment at hearing April 30, 2014)

"So yeah. My name is Carlo Voli and I'm in Edmonds, Washington. And you were stating that the air quality in Anacortes and Mount Vernon is actually very good but those two larger urban centers are not downwind from the refineries. So the question is what the air quality downwind such as in Guemes Island and Bayview and other places like that (7)? And the other thing is I've learned recently that the refineries, the Shell refinery, I'm sure the other refineries do as well,

have controlled explosions and flare-ups quite often on a daily basis and that's when they are out of compliance with the air quality standards (1, 2) and they just pay their fines (6) and that seems to be the business as usual and is that really okay that that be business as usual. Then, engaging in illegal activity, paying their fine and, you know, just continuing to do that so I think that needs to be revised."

Jan Woodruff (email received March 27, 2014)

"Thank you for scheduling a public hearing for April 30 regarding the Shell PSR "Air Operating Permit." As you probably know, Shell and Tesoro have been "high priority violators" of the U.S. Clean Air Act for much too long (8) [1][1], and our community members deserve an opportunity to express concerns about refinery air pollution and toxic releases. I hope you can help us understand why longtime "high priority violators" are permitted to continue operating (and emitting toxins and carcinogens) year after year (1, 2, 6). It does not seem like our community is protected by the CAA.

As you may know, Skagit County has the second highest age-adjusted cancer rate in Washington State. As shown in the table below, our rate of bladder cancer is 41% higher than the rest of the state. Bladder cancer was cited by the IARC in 2013 when it classified "outdoor air pollution" as carcinogenic to humans. As well, Skagit County has a 38% higher rate of melanoma than the rest of Washington, a 35% higher rate of leukemia, and a 14% higher rate of Non-Hodgkin lymphoma—all of which are associated with the same toxic chemicals released by Shell and Tesoro.

Washington State Cancer Registry Statistics, Age-Adjusted Incidence of Cancer per 100,000 (2008-2010)

	Skagit County			Washington State			
Cancer Site	Avg. New Cases/Yr	Age Adjusted Rate/100K	Age Adjusted 95% CI	Avg. New Cases/Yr	Age Adjusted Rate/100K	Age Adjusted 95% CI	% Difference
All Sites Combined	837	582.9	(560-607)	36,938	532.1	(529-535)	9.5
Bladder	46	31.4	(26-37)	1,488	22.2	(22-23)	41.4
Melanoma (Skin)	88	62.9	(55-71)	3,154	45.6	(45-47)	37.9
Leukemia	27	19	(15-24)	953	14.1	(14-15)	34.8
Kidney/Renal Pelvis	30	21.3	(17-26)	1,131	16.2	(16-17)	31.5

[1][1] Shell and Tesoro refineries in Anacortes have long been classified as *high priority violators* of the Clean Air Act. "… with Shell's $291,000 in fines in five years numbering it as the No. 2-most-fined Clean Air Act violator in the Northwest…EPA has classified the Shell refinery as a "high priority violator" at least since the end of 2008…" [Robert McClure, et al, *EPA's 'High Priority Violators' Scattered Across the Northwest*, *Oregon Public Broadcasting*, November 7, 2011. http://earthfix.opb.org/communities/article/epas-high-priority-violators-scattered-across-the-/]. A *Seattle Times* analysis reported that areas with the worst air are those around ports and refineries due to diesel exhaust and hazardous pollutants. "Anacortes has some of the region's worst air, partly because huge oil tankers motor past and park at nearby refineries…. A single freighter idling at port can produce as much diesel pollution as 2,300 semi trucks driving down the highway." [Warren Cornwall and Justin Mayo, *Where the Worst Air Is*, *Seattle Times*; February 23, 2006. http://seattletimes.com/html/localnews/2002823121_toxic23m.html]

Non-Hodgkin Lymphoma	35	24.4	(20-30)	1,456	21.4	(21-22)	14
Lung & Bronchus	102	69.2	(62-78)	4,263	63.4	(62-64)	9.1

CI = Confidence Interval

The *Toxic Release Inventories* in the refinery EPA *ECHO Reports* (2003 through 2011) document that Shell and Tesoro refineries have released tons of carcinogens and toxins into our air, land, and water. Specifically:

- 56 tons of *benzene*, a known carcinogen linked with leukemia, Non-Hodgkin's lymphoma (NHL) and other hematological cancers, melanoma (animal studies), hemotoxicity and neurotoxicity (animal studies), and depression of the central nervous system (CNS). Benzene is classified as a known human carcinogen by IARC and NTP
- 161 tons of *xylene* compounds and 149 tons of *toluene*, both neurotoxins and "suspected carcinogens" for brain, CNS, lung, and rectal cancer, as well as NHL.
- 18 tons of *tetrachloroethylene*, a CNS depressant and likely toxin to kidneys, liver and respiratory tract. Animal and human studies provide circumstantial evidence that "exposure to tetrachloroethene increases the risk of developing Parkinson's disease ninefold." PCE is a "probable carcinogen" (IARC) linked to bladder, esophageal, kidney, cervical, liver and breast cancer, as well as NHL and multiple myeloma.
- 0.6 tons of *1,3-butadiene*, a known carcinogen linked to increased incidence of hematolymphatic cancers (e.g., leukemia), and implicated in respiratory, bladder and stomach cancer.
- 1,587 tons of *sulfuric acid*, a known carcinogen for laryngeal cancer, "suspected carcinogen" for lung cancer, and neurotoxin that can cause numbness to paralysis in limbs (peripheral neuropathy).
- 204.2 tons of *N-hexane*, a neurotoxin that causes peripheralneuropathy and polyneuropathy.
- 12.5 tons of *naphthalene*, a polycyclic aromatic hydrocarbon and "suspected carcinogen" for respiratory cancers (listed as a "known carcinogen" in California). According to a MSDS sheet, naphthalene is toxic to blood, kidneys, the nervous system, the reproductive system, liver, mucous membranes, gastrointestinal tract, upper respiratory tract, central nervous system (CNS).
- 33.4 tons of *ethylbenzene*, a "possible human carcinogen" and toxin to nervous, respiratory and blood systems.
- 93.3 tons of *nickel* compounds, a known carcinogen for lung, nasal and nasopharynx cancers. "Suspected carcinogen" for pancreas and stomach cancers. A skin and respiratory toxin, causing "nickel dermatitis," asthma, decreased lung function, and bronchitis.
- 0.6 tons of *polycyclic aromatic hydrocarbons* (PAHs), including a number of known carcinogens. PAHs are linked to brain, lung, laryngeal, breast, bladder, and prostate cancer, as well as squamous cell carcinomas and malignant melanoma.
- 55 tons *cyclohexane*, which is toxic to the nervous system, eyes and cardiovascular system. May cause liver of kidney damage, or death.
- 0.8 tons of *mercury* compounds, a "possible carcinogen" (brain/CNS, stomach, thyroid & renal cancers), and may cause kidney and neurological damage.

- As well as many more carcinogens and toxins.

The ongoing release of carcinogens and toxins is completely unacceptable. Why aren't these refineries being held accountable for being out of compliance with the Clean Air and Clean Water Acts, as well as the Constitution and statutes of Washington State?"

Response:

Thank you for your comments.

Many commenters expressed concerns about the emissions from the refinery and their impact on air quality, human health, and welfare. This hearing and comment period were specific to the Air Operating Permit (AOP) renewal for Shell Puget Sound Refinery (PSR). The AOP collects all the existing applicable requirements related to air pollution into a single document and cannot permit any new emissions or require reductions in existing emissions. As such, the AOP cannot affect existing emissions.

However, when a source requests a construction permit for a project with new emissions, NWCAA requires that the impacts to air quality by the project are protective of human health (including sensitive populations such as asthmatics, children, and the elderly) and public welfare (including decreased visibility and damage to animals, crops, vegetation, and buildings). The construction permitting process has a separate required public involvement and comment process.

NWCAA also operates and maintains monitors of the ambient air for various pollutants around our jurisdiction. The data from these ambient stations are available on NWCAA's website, www.nwcleanair.org. The entire NWCAA jurisdiction is in compliance with the federal ambient air quality standards.

Because the above comments have not identified any material errors or omissions in the draft AOP, NWCAA did not change the draft AOP as a result of these concerns.

AIR OPERATING PERMIT REQUIREMENTS

10. Including GHG Emission Requirements in the Air Operating Permit

Kimberly LaDuca, 350 Seattle (letter dated April 30, 2014)

"I. Greenhouse Gas (GHG) Regulation (2.9)

The Air Operating Permit should include all of the federal and state GHG emissions requirements that PSR is required to meet. In the SOB, NWCAA acknowledges that PSR is required to meet the following GHG emissions requirements: (A) 40 CFR 98 (discussed in 2.9.1); (B) WAC 173-407 (discussed in 2.9.2); and (C) WAC 173-441 (discussed in 2.9.3). Although PSR is subject to three GHG emissions requirements, only one of these regulations (WAC 173-441, discussed in 2.9.3) is included in the AOP. It appears that NWCAA differentiates between the three applicable GHG requirements based on whether or not the "regulation is considered an applicable requirement under the Title V program.

A. Failure to Include 40 CFR 98 – Federal Mandatory Greenhouse Gas Emission Inventory Regulation in the AOP (2.9.1)

It is undisputed that 40 CFR 98-Federal Mandatory Greenhouse Gas Emission Inventory Regulation applies to PSR. In the Statement of Basis (SOB) at 2.9.1, NWCAA explicitly states that 40 CFR 98 "applies to PSR due to its GHG emission levels and type of facility." However, NWCAA continues on to incorrectly conclude that 40 CFR 98 "excluded from appearing in the AOP because it does not contain applicable requirements under the Title V program" citing to WAC 173-401-200(4).

WAC 173-401-200(4) is a citation to the definition of the term "Applicable Requirement." Within the definition of "applicable requirement" it explicitly states that the definition of "applicable requirement" includes any requirement promulgated by EPA under (iii) NSPS or (iv) HAP. Shell PSR is regulated under NSPS and NESHAPs. Any federal requirement created by EPA under either the NSPS or NESHAPs program is a "applicable requirement" which NWCAA must include in the Air Operating Permit. Therefore, the failure to include 40 CFR 98, a federally promulgated mandatory requirement, in the AOP violates Washington law which requires that each permit "shall contain terms and conditions that assure compliance with all applicable requirements at the time of permit issuance." WAC 173-401-600(1).

Title V is the broad provision of the Clean Air Act which governs permits for regulated facilities such as PSR. As the main section of the CAA concerning permits generally, it is unclear how a mandatory requirement applicable to all major permitted facilities could be deemed not part of "the Title V program." It is imperative that NWCAA explain the logic and reasoning behind its' conclusion that 40 CFR 98 "does not contain applicable requirements under the Title V program."…

C. There is no Articulated Explanation or Reason for the Inconsistent Treatment of GHG Emissions Requirements

The third GHG Emissions requirement, WAC 173-441-Reporting of Emissions of Greenhouse Gases (discussed in 2.9.3) is included in the AOP. Nothing in the SOB and the AOP explains why WAC 173-441 is included in the AOP and what makes this requirement different then 40 CFR 98. Similarly, WAC 173-441 is a mandatory GHG emissions reporting regulation which applies to PSR. The only obvious difference is that WAC 173-441 requires reporting to Ecology, whereas 40 CFR 98 requires reporting to EPA. Neither of these reporting mechanisms are implemented by NWCAA.

350 Seattle requests that the NWCAA explain the rationale for including 2.9.3 in the AOP and what differentiates this provision from the two other GHG emissions regulations which are not included in the AOP. Specifically, NWCAA should address why WAC 173-441 (the regulation discussed in 2.9.3) "is considered an applicable requirement under the Title V program."

Kimberly LaDuca, 350 Seattle (oral comment at hearing April 30, 2014)

"Hi. So my name is Kimberly LaDuca. I'm here with 350 Seattle. I'm also an environmental attorney barred in the state of Washington. So I want to primarily discuss the failure to include the greenhouse gas regulations in the air operating permit. So the Northwest Clean Air Agency concedes that there are three requirements - one federal greenhouse gas inventory and reporting requirement and then two applicable Washington State Laws. Earlier you explained that because of a legal requirement those aren't included in the air operation, operating permit. This legal requirement to me seems like some – a way to get out of putting these requirements, these mandatory greenhouse gas emissions reporting requirements in the air operating permit. If the purpose of the air operating permit is to compile all existing air regulations and requirements into one document, it does not make sense to fail to include some of the most important provisions that affect Shell. And so I'm also going to submit written comments on behalf of 350 for the record and these discuss this specific legal requirement and the agency's conclusion that differentiates those regulations. But we ask that the agency explain its legal reasoning for the inconsistent treatment of greenhouse gas regulations."

Response:

Thank you for your comments.

The Northwest Clean Air Agency (NWCAA) included some greenhouse gas requirements and not others in the Air Operating Permit (AOP) because of the specific legal definition of "applicable requirement".

In WAC 173-401-300(3), the AOP shall include "all applicable requirements for all relevant emissions units in the source". WAC 173-401-200(4) defines "applicable requirement" as including requirements stemming from:

- Specified sections of the federal Clean Air Act:
    - Title I requirements listed in 40 CFR 52,
    - Federal construction permits (Title I part C),
    - Nonattainment area permits (Title I part D),
    - New Source Performance Standards (section 111),
    - National Emission Standards for Hazardous Air Pollutants (section 112),
    - Acid Rain program (Title IV),
    - Section 504(b) or 114(a)(3),
    - Solid waste incineration requirements (section 129),
    - Section 183(e),
    - Section 183(f),
    - Section 328, and
    - Stratospheric ozone (Title IV);
- The state Clean Air Act under chapter 70.94 RCW;
- Permits issued by NWCAA;
- Chapter 70.98 RCW (nuclear energy and radiation); and
- Chapter 80.50 RCW (energy facilities).

Note that EPA issued 40 CFR 98 using the statutory authority in the federal Clean Air Act sections 114(a)(1) and 208. As can be seen in the above list, the regulation cited by the commenter, 40 CFR 98, is not explicitly listed as an applicable requirement, nor are federal Clean Air Act sections 114(a)(1) or 208 listed in the definition. EPA confirmed this interpretation in the preamble to the Federal Mandatory Greenhouse Gas Emission Inventory Regulation in 74 FR 56288 (October 30, 2009). Therefore, 40 CFR 98 is not listed in the AOP. Because the comment did not identify any material errors or omissions, no changes were made to the draft AOP or SOB.

Similarly, the AOP does not list the applicable sections of the Washington state greenhouse gas requirements for power plants under chapter 173-407 WAC. The Department of Ecology (Ecology) issued chapter 173-407 using the statutory authority in chapter 80.80 RCW. Chapter 80.80 RCW is not included in the list in the definition of "applicable requirement". Because the comment did not identify any material errors or omissions, no changes were made to the draft AOP or SOB.

On the other hand, Ecology used the statutory authority in the state Clean Air Act (chapter 70.94 RCW) and chapter 70.235 RCW to issue the state Reporting of Emissions of Greenhouse Gases regulation under chapter 173-441 WAC. Because chapter 70.94 RCW is included in the list in the definition of "applicable requirement", NWCAA included this requirement in the AOP. NWCAA added wording to the Statement of Basis to clarify the regulatory analysis. However, because the comment did not identify any material errors or omissions in the draft AOP, NWCAA did not change the draft AOP. As such, this is not a substantive change requiring NWCAA to conduct a second public notice period for the draft permit.

11. Greenhouse Gas Requirement Applicability (Chapter 173-407 WAC)

Kimberly LaDuca, 350 Seattle (letter dated April 30, 2014)

"B. Failure to Include GHG Emissions Performance Standard, WAC 173-407-130(1) in AOP (2.9.2)

NWCAA concludes that Part II of the GHG emissions performance standard applies to PSR due to the change in ownership of the cogeneration facility. "As such, the Cogens are subject to the emission standard for Greenhouse Gases of 1,100 lb/MW-hr. With the applicability of the emission standard, PSR must perform the mandated monitoring, testing, and reporting." 2.9.2 SOB at 45. Although NWCAA states that Part II is applicable to PSR, this provision is also incorrectly excluded from the AOP. The failure to explicitly include the GHG Emission Performance Standard of 1,100 lbs per MWh (annual average), is in violation of WAC 173-407-130(1) GHG.

Furthermore, in the SOB, it appears the agency has incorrectly interpreted the requirements of WAC Chapter 173-407. WAC 173-407-005 explains that there are two distinct requirements found in Chapter 173-407 and that "these two requirements are required to work in unison with each other in a serial manner. The first requirement is the emissions performance standard. Once that standard is met, the requirements of chapter 80.70 RCW (WAC 173-407-010 through 173-407-070) are applied." Thus, the law explicitly states that even though Part II requirements currently apply to PSR, once Part II is satisfied, Part I applies.

NWCAA incorrectly states that Part I of WAC Chapter 173-407 does not apply to PSR. By erroneously describing the legal requirements of Part I in the SOB, NWCAA implies that Part I will never be applicable to PSR. Part I does apply to PSR, however; Part I applies only after the Part II emission performance standard is met. NWCAA must change this provision and make it clear that Part I (WAC 173-407-010 through 173-407-070) applies to PSR and that PSR will be required to satisfy this program after it reaches compliance with Part II. To put it another way, PSR must demonstrate compliance with WAC 173-407-130(1), the GHG Emission Performance Standard, and to do so PSR cannot exceed an annual average of 1,100 lbs per MWh. After this emission standard is met, the law mandates that Part I (carbon dioxide mitigation) applies to PSR.

NWCAA needs address this misstatement of law and make it clear that all of WAC Chapter 173-407 applies to PSR. Since AOPs have a permit shield, NWCAA's mistake in this permit will allow PSR to avoid Part I until a new AOP is required. Considering that Shell PSR's last AOP was written in 2004 and not updated since, it is absolutely imperative that NWCAA include language in the AOP that accurately describes the law by stating that Part I will be applicable to PSR after compliance with Part II is reached."

Response:

Thank you for your comment.

As the commenter points out, WAC 173-407-005 explains that there are two distinct requirements found in Chapter 173-407 and that "these two requirements are required to work in unison with each other in a serial manner. The first requirement is the emissions performance standard [established by Part II of the regulation]. Once that standard is met, the requirements of chapter 80.70 RCW (WAC 173-407-010 through 173-407-070) [Part I] are applied." According to the commenter, since Shell PSR is subject to and complies with Part II, WAC 173-400-005 makes the refinery subject to Part I as well.

The commenter has misinterpreted WAC 173-407-005. The language in WAC 173-407-005 explains how Part I and Part II work together; it clarifies that mitigation required by Part I, which is based upon total tons of CO_2 emitted, is to be determined after considering any emission reductions required by Part II. This provision does not supersede the applicability criteria for Part I in WAC 173-407-030; it does not make Part I applicable to facilities or units that do not otherwise trigger applicability under WAC 173-407-030.

Under WAC 173-407-030(3) and (4), Part I is required for either new facilities or for a modification to existing facilities that results in an increase of station-generating capability of more than 25 MWe or an increase in CO_2 emissions output by 15% or more. Because the cogeneration units at Shell Puget Sound Refinery (PSR) have not increased station capacity or CO_2 emissions above the listed thresholds, those units are not subject to the carbon dioxide (CO_2) mitigation requirements of Part I. A change in ownership, which under WAC 173-407-120(4)(c) triggered applicability of Part II for Shell, is not a trigger under WAC 173-407-030 for applicability of Part I.

Because the above comments have not identified any material errors or omissions in the draft AOP, NWCAA did not change the draft AOP as a result of these concerns.

12. Refinery Greenhouse Gas Emissions

Peggy Bridgman (oral comment at hearing April 30, 2014)

"My husband and I own a portable saw mill and he cuts lumber for people. When he is finished, he has strips of wood because he is cutting square pieces out of round logs, he has some, it's called slab wood, left over. If he were to burn that, county officials – and get reported and get caught – county officials would come down on him, make him stop and fine him pretty substantially. So I'm wondering that about the amount of emissions that a little slab wood burning would emit compared to the amount of emissions that a Shell oil refinery would emit (1, 2, 6, 7, 9). It seems to me that Shell's emissions are so excessive and so poorly monitored and we all need to care about global climate change even the little guy with the little saw mill. So I believe that Shell must be made to track its emissions and report them to public (7, 9, 10, 11). Thank you."

Jodie Buller (written comment at hearing April 30, 2014)

"I also ask that the agency revisit including GHG emmissions in the draft permit (10, 11)."

Tyler Campbell (oral comment at hearing April 30, 2014)

"…And also climate change which is upon us. We just had a hurricane in the Philippines that killed more than 7000 people. These are huge, huge things that we have to deal with and keep in our minds when we're dealing with these issues and I would urge you guys to keep this in mind when you're dealing with the regulation of our local refinery (10, 11)."

Gena DiLabio (email received March 25, 2014)

"Please deny the Shell Refinery at March Point the required Air Operating Permit for which they are applying (1, 2, 6).

The toxic emissions they will emit if granted this permit are hazardous (9) to public health and will contribute to global climate change (10, 11)."

Gena DiLabio (2nd email received March 25, 2014)

"Equillon Enterprises LLC, Shell Oil Products U.S. which owns and operates the Puget Sound Refinery(PSR) located on March Point near Anacortes, WA is applying for a required Air Operating Permit(AOP). Please DENY them the AOP (1, 2, 6). The refinery has the potential to emit over 100 tons per year of particulate matter, nitrogen oxides, sulphur dioxide, volatile organic compounds, carbon monoxide; 10Si tons per year of a single hazardous air pollutant and 25 tons per year of combined hazardous air pollutants; and 100,000 tons per year carbon dioxide equivalents and 100 tons per year greenhouse gases (9). Please don't permit further pollution of Skagit County air and contribution to global climate change (10, 11)."

Gena DiLabio (letter dated April 27, 2014) & Teresa Dix (letter dated April 27, 2014)

"Currently there are no restrictions on greenhouse gas emissions for Shell's refinery, which is one of the largest single sources of emissions in Washington State.

I want the NWCAA to take a strong position in regulating greenhouse gases from facilities like Shell's refinery (1, 2, 6, 9, 10, 11)."

Karen Powers (letter dated March 16, 2014)

"Global Climate ramifications of the emissions need to be evaluated and made public."

Response:

Thank you for your comments.

Several commenters expressed concerns about the emissions from the refinery and the impact upon climate change. This hearing and comment period were regarding the Air Operating Permit (AOP) renewal for Shell Puget Sound Refinery (PSR). The AOP collects all the existing applicable requirements related to air pollution into a single document.

All relevant greenhouse gas regulations are appropriately addressed in the AOP and/or Statement of Basis.

For more details about refinery emissions and greenhouse gas requirements for the AOP, see Responses 9, 10 and 11.

For more details about monitoring and reporting emissions, see Responses 7 and 9.

Because the above comments have not identified any material errors or omissions in the draft AOP, NWCAA did not change the draft AOP.

13. Regulating Crude Slate

Kathryn Alexandra (email dated April 28, 2014)

"Is the refinery's current equipment capable of safely refining the Bakken crude oil thus preventing a repeat of the Tesoro disaster that killed seven workers."

Jim Katrien (letter dated March 18, 2014)

"Its been proven to be more volatile and places their whole infrastructure in question. It was built for Alaska crude."

Jennifer Keller (oral comment at hearing April 30, 2014)

"Now crude oil comes in many forms now. You just say crude oil, it doesn't tell you very much. And I'm thinking back in high school chemistry class, you know? And you were expected to let the teacher know exactly what you were going to pour in the beaker and put on the Bunsen burner. Before you did anything. So, Shell should be required on exactly what types of oil they are burning and in what quantity."

Kimberly LaDuca, 350 Seattle (letter dated April 30, 2014)

"III. Lack of a Mechanism for Reporting Emissions from Different Types of Crude Oil

NWCAA must require emissions monitoring that differentiates between Alaskan crude, Tar Sands and Bakken Shale Oil. (9) Shell PSR is executing plans to radically alter the type of crude oil processed at the refinery. According to Shell's website, "Although it continues to receive crude from Central and Western Canada, now **most** of the facility's feedstock arrives by tanker from oilfields on Alaska's North Slope." Thus, past annual GHG emissions levels are limited to emissions associated with Alaskan crude oil. (emphasis added) (10, 11, 12).

The AOP fails to take into amount nor does it even mention the difference in GHG emissions and other pollutants when Tar Sands or Bakken crude oil is being burned. In 2009 when PSR began importing Alberta Tar Sands, releases of cumene and vanadium were first documented in Shell's Toxic Release Inventory (9). Both Alberta Tar Sands and Bakken Crude Oil are dirtier then the Alaskan crude oil refined by PSR in the past. Shell PSR has an annual average crude processing rate of approximately 150,000 barrels per day. According to Shell's website, "Currently, the

plant processes as much as 145,000 barrels (5.7 million gallons) of crude oil per day – enough to fill a 17-foot-deep swimming pool the size of a football field." Given the large quantity of crude oil processed daily at PSR, the difference in emissions associated with different types of crude oil is significant. Without mandatory monitoring of the different emissions associated with burning the various types of oil, the NWCAA will be unable to carry out its delegated authority under the CAA and make sure that emissions levels do not dramatically increase when PSR switches to burning predominately Tar Sands and Bakken crude oil (7, 9)."

Lisa Marcus (written comment at hearing April 30, 2014)

"I want the Northwest Clean Air Agency to increase oversight of all air pollution emissions including sources because different types of crude oil are linked to increase in certain types of emissions (1, 2, 6, 7, 9), and of green house gasses because these effect the climate emergency we face and must address every source (10, 11, 12)."

Dan O'Connor (written comment at hearing April 30, 2014)

"I am very concerned that the changing sources of crude oil that are arriving at this refinery will have greater emissions of green house gases (10, 11, 12). Can we be sure that the emissions from this refinery will be the same or lower (1, 2) if we are relying on the permittee to self-report (7)?

I believe that we need to work towards reducing emissions over time, please work towards this goal."

Response:

Thank you for your comments.

Where applicable requirements specify monitoring methods, those methods are incorporated into Air Operating Permits (AOPs). If an applicable requirement does not specify a monitoring method, or if the specified method is not adequate to determine the source's compliance with the requirement, then an AOP also may incorporate additional monitoring to determine the source's compliance status. AOPs cannot, however, require additional monitoring that is unrelated to determining compliance with applicable requirements. The commenters did not identify any emissions standard or other applicable requirement for which monitoring differentiated by the source or type of crude oil being refined may be needed to determine compliance, and the NWCAA is not aware of any such applicable requirement.

If an emission unit is being monitored for its emissions of a pollutant, and changing the emission unit's feedstock changes the emissions from the emission unit, then the representative monitoring on that unit will capture that change. Shell PSR reports criteria, greenhouse gas, and other pollutant emissions under federal and state reporting requirements[6]. All emission inventory data is available upon request; selected emission inventory data is posted on NWCAA's website (http://www.nwcleanair.org/airQuality/inventories.htm).

Regarding concern expressed about the capability of the refinery to safely process other types of crude oils, the commenter did not identify any applicable requirement related to process safety that NWCAA did not properly address in the AOP, and NWCAA is not aware of any such applicable requirement

Because the above comments have not identified any material errors or omissions in the draft AOP, NWCAA did not change the draft AOP as a result of these concerns.

[6] NWCAA 150, WAC 173-400-105(1), 40 CFR 98, and chapter 173-441 WAC

14. Addressing Class I Areas

Skagit Audubon Society (letter dated April 30, 2014)

"East, and generally downwind, of the Shell Puget Sound Refinery lie Class I air quality areas designated under the federal Clean Air Act: North Cascades National Park, Pasayten Wilderness, Glacier Peak Wilderness, and, more to the southwest, Alpine Lakes Wilderness. As stated on the website of the National Park Service's Air Resources Division (http://www.nature.nps.gov/air/permits/index.cfm): "The Clean Air Act includes measures to prevent significant deterioration of air quality (PSD) in areas where air quality is better than the national standards established by the Environmental Protection Agency (EPA) to protect public health and welfare. One of the express purposes of the PSD program is 'to preserve, protect, and enhance the air quality in national parks and national wilderness areas.'" The AOP and *Statement of Basis* do not appear to contain any reference to the fact that Class I areas might be, and perhaps are being, adversely affected by emissions from the Shell refinery. In what ways does the NWCAA coordinate with the National Park Service, in the case of North Cascades National Park, and with the U.S. Forest Service (manager of the Pasayten, Glacier Peak, and Alpine Lakes Wilderness areas) to ensure compliance with the relevant provisions of the Clean Air Act? Does the NWCAA utilize the air quality data collected by the National Park Service and Washington Department of Ecology in the upper Skagit watershed to ensure that the Shell refinery and other upwind large sources of emissions are in compliance with the Clean Air Act as it applies to Class I areas?"

Response:

Thank you for your comment.

During the construction permitting of major new or modified sources of air pollution, one of the factors that Washington's permitting regulations require be considered is the potential impact of the proposed source's emissions on visibility in Class I areas. Although this analysis of impacts on Class I areas is not part of the process involved in developing an Air Operating Permit (AOP), existing applicable requirements resulting from the analysis during construction permitting are incorporated into the AOP. The AOP, however, is not a vehicle for imposing new requirements on a source.

Because the above comments have not identified any material errors or omissions in the draft AOP, NWCAA did not change the draft AOP as a result of these concerns.

15. Reasonably Available Control Technology (RACT)

Skagit Audubon Society (letter dated April 30, 2014)

"We note the following section on page 37 of the draft AOP:
"2.3.4 Reasonably Available Control Technology
"*2.3.4.2 WAC 173-400-040 (9/20/93)*
"All emissions units are required to use RACT which may be determined for some sources or source categories to be more stringent than the applicable emission limitations of any chapter of Title 173 WAC. Where current controls are determined to be less than RACT, Ecology or the NWCAA shall, as provided in section 8, chapter 252, Laws of 1993, define RACT for each source or source category and issue a rule or regulatory order requiring the installation of RACT."

We further note in the NWCAA's news release of April 25, 2014 ("Location change for Shell refinery air permit public hearing"), the statement, "It (the AOP) also does not allow the refinery to increase its emissions or require the refinery to decrease its emissions." We assume that RACT changes over time as technology for emissions control improves and that such improvements would result in reduced emissions from particular operations or equipment. If we understand the above code reference correctly, and RACT must be installed when available, why would the renewed AOP not reflect a decrease in permitted emissions? Have there not been

improvements in reasonably available control technology in the five or more years since the last renewal of the Shell refinery's AOP?"

Response:

Thank you for your comment.

Washington's Air Operating Permit (AOP) regulations provide that the requirements that exist at the time an AOP is issued or renewed constitute Reasonably Available Control Technology (RACT). When an order or rule that determines RACT or updates a RACT determination is issued, then subsequent AOPs must incorporate the new or updated RACT requirements. However, an AOP can only incorporate existing RACT determinations; it cannot be used to set new RACT limits.[7]

Because the above comments have not identified any material errors or omissions in the draft AOP, NWCAA did not change the draft AOP as a result of these concerns.

16. Good Air Pollution Control Practices

Phyllis R. Dolph (email received April 29, 2014)

"Good Air Pollution Control Practices by Shell Oil at Marchs'' Point need to be clearly defined. They should be specific, and clear and include the start ups and shutdowns of equipment and the transport of crude oil by rail (1, 2). Methods of enforcement should be specifically outlined and carried out (6)."

Skagit Audubon Society (letter dated April 30, 2014)

"In the section of the draft AOP listing pollution emission limits there is repeated wording whose vagueness stands out in a document otherwise so specific. For example, on p.139 in the center column under Combustion Turbine Units, 5.9.5 NOx the statement appears: "All pollutant emission limits shall not apply during startup and shutdown periods. Startups and shutdowns shall be done in accordance with good air pollution control practices." The identical wording appears in the many following section for Ammonia, Carbon Monoxide, Sulfur Dioxide, etc. The specific meaning of "good air pollution control practices" may appear elsewhere in the AOP, but we are unable to find it. If startups and shutdowns of equipment contributing to air emissions are frequent, vagueness in the definition of these practices and in their enforcement could lead to significant adverse impacts on ambient air quality. It would seem important that "good air pollution control practices" be precisely described."

Response:

Thank you for your comments.

The Northwest Clean Air Agency (NWCAA) is obligated to incorporate all applicable requirements into Shell Puget Sound Refinery's (PSR's) Air Operating Permit (AOP) as they exist when the permit is issued. The term "good air pollution control practices" is used in Washington's regulations to describe the standard for operating sources during startup and shutdown (WAC 173-400-081), excess emissions (WAC 173-400-107), and unavoidable excess emissions (WAC 173-400-109). In addition, the term "good air pollution control practice" is also used in the federal regulations (40 CFR 60 Subpart A, 40 CFR 61 Subpart A, and 40 CFR 63 Subpart A). NWCAA Regulation 104.1 adopts all of these regulations by reference. All of these references have been rolled into the AOP as appropriate. The term "good air pollution control practice" is not defined in the federal rules, chapter 173-400 WAC or NWCAA regulations.

The permit conditions have been developed to incorporate the applicable requirements of WAC 173-400-081, -107 and -109 into the AOP. In particular, WAC 173-400-107 provides: "Excess emissions due to upsets shall be considered unavoidable provided" that several conditions are

[7] *Sierra Club v. Southwest Washington Clean Air Agency*, PCHB No. 09-108.

met, including: "The operator took immediate and appropriate corrective action in a manner consistent with good air pollution control practices for minimizing emissions during the event…" The permit conditions in question correctly incorporate this applicable requirement into the AOP for Shell PSR.

The term "good air pollution control practices" is commonly used by the U.S. Environmental Protection Agency, state, and local air agencies to refer to practices and procedures used to minimize air emissions, in addition or as an alternative to the use of air pollution control equipment. The term refers to both operating and maintenance practices and can reflect manufacturer's recommended maintenance or operating parameters, best practices in an industry, or a set of practices or procedures developed by the source to minimize emissions from a particular emission unit or process.

For example, the Air Operating Permit (AOP) also uses the term to refer to the set of operating procedures required to minimize emissions during transport and handling of petroleum coke (Conditions 5.2.5 and 5.2.6) and to the handling (handling and storage) of gasoline in ways that minimize emissions (Condition 5.10.1). As these examples demonstrate, the term is applied in instances where the way in which materials are handled or equipment is operated or maintained affects air emissions, such that good practices will minimize emissions.

Because the above comments have not identified any material errors or omissions in the draft AOP, NWCAA did not change the draft AOP as a result of these concerns.

17. Compliance Monitoring Report under AOP Term 6.5.1 Only Required Every Five Years

Kimberly LaDuca, 350 Seattle (letter dated April 30, 2014)

"The AOP under 6.5.1 requires PSR to submit a compliance report every five calendar years. Regardless of whether this reporting period may be the norm for "boiler and process heater tune-up with continuous oxygen term" given the fact that PSR is currently in a state of serious non-compliance, a five-year gap in compliance testing and reporting is indefensible (8)."

Response:

Thank you for your comment.

According to the federal regulations listed in AOP Term 6.5.1[8], boilers and process heaters that are equipped with continuous oxygen trim must do a tune-up once every five years, with the initial being conducted by January 31, 2016. The source is to report the initial tune-up and once every five years thereafter. The five-year report corresponds to the frequency of the tune-ups; there is nothing to report for the periods between tune-ups. Note, however, the Air Operating Permit (AOP) requires the refinery to submit a certification annually stating whether they are in compliance with each term of the AOP.

Should the Northwest Clean Air Agency (NWCAA) determine that the existing monitoring for applicable requirements is inadequate, the AOP program allows NWCAA to require additional monitoring for certain requirements. However, for federal requirements such as the Boiler MACT, this ability only extends to those federal requirements that have no associated monitoring. In this case, the federal boiler tune-up requirement includes specified monitoring, recordkeeping, and reporting so NWCAA cannot include additional requirements.[9]

Because the above comments have not identified any material errors or omissions in the draft AOP, NWCAA did not change the draft AOP as a result of these concerns.

[8] 40 CFR 63 Subpart DDDDD (referred to as Boiler MACT)

[9] KenKnight, Jeff, EPA Office of Air, Waste and Toxics, Letter to John Kuterbach, Alaska Department of Environmental Conservation. 27 Jan. 2005.

18. Leak Detection and Repair (LDAR) Program Flaws

Kimberly LaDuca, 350 Seattle (letter dated April 30, 2014)

"The Leak Detection and Repair (LDAR) Program requirements for VOC/HAPs demonstrates the lack of meaningful regulations placed on PSR. AOP 6.3.3 at 277. For example, the monitoring provision states "If the sensor is not equipped with an audible alarm, check sensor daily." *Id*. As indicated by this statement, clearly audible alarms are a highly available method to monitor leaks from compressors. NWCAA has the authority and the responsibility to require that PSR equip all sensors with audible alarms.

In the same provision (6.3.3), PSR is allowed to go 5 calendar days before it is required to make a first attempt at addressing a known leak. Actual repairs must be made within fifteen days unless the major exception for a "delay of repair" applies. AOP 6.3.3 at 277. Under the delay of repair exception for a leak emitting VOCs and HAPs, PSR can delay repairing a leak if it "if the repair is technically impossible without a complete or partial refinery or process unit shutdown." The dangerous properties of VOCs and HAPs coupled with Shell's ongoing serious violator status make the time requirements or lack thereof for repairing leaks unacceptable (1, 2, 8)."

Response:

Thank you for your comment.

Should the Northwest Clean Air Agency (NWCAA) determine that the existing monitoring is inadequate, the Air Operating Permit (AOP) program allows the agency to require additional monitoring under some circumstances. However, for federal requirements such as the Leak Detection and Repair program[10], this ability only extends to those federal requirements that have no associated monitoring. In this case, the Leak Detection and Repair requirements include specified monitoring (which includes compliance options), recordkeeping, and reporting so NWCAA cannot mandate additional requirements or limit the options provided in the federal rules.[11]

Because the above comments have not identified any material errors or omissions in the draft AOP, NWCAA did not change the draft AOP as a result of these concerns.

19. Shell Puget Sound Refinery's technical comments/edits

A. Corrections to fugitive component counts for various process units (AOP Section 1)

Response:

The Air Operating Permit (AOP) includes the component counts for informational purposes; compliance determinations do not rely on the component counts in the AOP. In the interest of including the most recent information, the Northwest Clean Air Agency (NWCAA) changed the AOP in response to this comment to reflect the updated component counts. Because this change does not involve a relaxation to rule applicability or requirements, or make a significant change to existing monitoring, reporting, or recordkeeping requirements, this is not a substantive change requiring NWCAA to conduct a second public notice period for the draft permit.

B. Fugitive component count for the Diesel Railcar Loading Rack should be set to zero since they are in heavy liquid service (AOP Section 1.10.2)

Response:

[10] 40 CFR 60 Subpart GGG/GGGa and 40 CFR 63 Subpart CC

[11] KenKnight, Jeff, EPA Office of Air, Waste and Toxics, Letter to John Kuterbach, Alaska Department of Environmental Conservation. 27 Jan. 2005.

Components in heavy liquid service are potentially subject to applicable requirements; therefore, these components are listed in the AOP. No changes were made to the AOP as a result of this comment.

C. Corrections to Tank Services (AOP Section 1)

Response:

NWCAA updated the AOP to reflect the updated tank services. Because these updates do not lessen the stringency of the applicable requirements and Shell Puget Sound Refinery (PSR) did not physically modify the tanks to accommodate the service changes, this is not a substantive change requiring NWCAA to conduct a second public notice period for the draft permit.

D. Applicability of 40 CFR 61 Subpart FF to Alkylation Units 1 and 2 Process Drains (AOP Section 1)

Response:

NWCAA updated the AOP to reflect the applicability of 40 CFR 61 Subpart FF to process units that do not have benzene-containing waste streams (i.e., Alkylation Units 1 and 2, Nonene Unit, the Nonene Truck and Railcar Loading Rack, and the Diesel Railcar Loading Rack). Given that these process units do not have benzene-containing waste streams, this change does not involve a relaxation to rule applicability or requirements, or make a significant change to existing monitoring, reporting, or recordkeeping requirements. Therefore, this is not a substantive change requiring NWCAA to conduct a second public notice period for the draft permit.

E. Should the process drains for the SRUs, the ethanol tank, and Propane/Butane LPG Racks be listed in AOP Section 1? (AOP Section 1)

Response:

Process drains are potentially subject to applicable requirements. Therefore, NWCAA has modified the AOP to include these drains. Because this change does not involve a relaxation to rule applicability or requirements, or make a significant change to existing monitoring, reporting, or recordkeeping requirements, this is not a substantive change requiring NWCAA to conduct a second public notice period for the draft permit.

F. AOP Term 5.3.1 relates to NO_X limits while the Monitoring, Recordkeeping, and Reporting column references a SO_2 continuous emission monitor. Please correct.

Response:

NWCAA updated the AOP to reflect NO_X monitoring. Because this change does not involve a relaxation to rule applicability or requirements, this is not a substantive change requiring NWCAA to conduct a second public notice period for the draft permit.

G. OAC 628 for the Delayed Coking Unit says that only pump drains and downstream junction boxes are subject to 40 CFR 60 Subpart QQQ. Also, OAC 623d for the fluidized catalytic cracking unit says that only the vertical riser project is subject to 40 CFR 60 Subpart QQQ. OAC 630 for the Hydrotreater 2 states that only the ultra low sulfur diesel project is subject to 40 CFR 60 Subpart QQQ.

Response:

In these three instances, the refinery performed projects that added drains and/or junction boxes to individual drain systems. These modifications triggered 40 CFR 60 Subpart QQQ, which applies to any drains associated with the modified individual drain system. As a practical matter, individual drain systems generally serve entire process units. Therefore, the AOP associates the process drains with individual process units. The

refinery must demonstrate which drains are or are not part of the modified individual drain system. NWCAA made no changes to the AOP as a result of this comment.

H. The Monitoring, Recordkeeping, and Reporting sections for AOP Terms 5.5.7, 5.5.8, 5.5.17, and 5.5.18 are a detailed description of flare monitoring requirements. Can this reference AOP Terms 5.11.1 through 5.11.7?

Response:

The Monitoring, Recordkeeping, and Reporting sections for AOP Terms 5.5.8 and 5.5.18 reference the use of colorimetric tube sampling for HCl, not flare requirements. As such, it is inappropriate to reference AOP Terms 5.11.1 through 5.11.7.

The Monitoring, Recordkeeping, and Reporting sections for AOP Terms 5.5.7 and 5.5.17 briefly describe the flare requirements from 40 CFR 63 Subpart UUU and then reference the flare requirements in AOP Terms 5.11.1 through 5.11.7. As such, the AOP already cites those terms.

No changes were made to the AOP as a result of this comment.

I. There are some VOC lines in the Sulfur Recovery Units (SRUs). Should Leak Detection and Repair (LDAR) requirements apply? (AOP Section 5.8)

Response:

NWCAA updated the AOP and Statement of Basis to reflect the applicability of the LDAR requirements in 40 CFR 60 Subpart GGG and 40 CFR 63 Subpart CC to the SRU. Because this change does not involve a relaxation to rule applicability or requirements, this is not a substantive change requiring NWCAA to conduct a second public notice period for the draft permit.

J. There are some LDAR components on the Nonene Truck and Railcar Loading Rack. Should the requirements be listed here?

Response:

The nonene process, including the truck and railcar loading rack, is considered a Synthetic Organic Chemical Manufacturing Industry (SOCMI) unit and is potentially directly subject to 40 CFR 60 Subpart VV. The courts stayed the definition of “process unit” in 40 CFR 60 Subpart VV; the effective definition at this writing does not include loading racks as a process unit or part of a process unit. Therefore, 40 CFR 60 Subpart VV does not apply to the Nonene Truck and Railcar Loading Rack. In addition, nonene does not meet the hazardous air pollutant (HAP) content requirement to be subject to the LDAR requirements in 40 CFR 63 Subpart CC. See discussions in Statement of Basis Sections 2.1.5 and 3.10.3. NWCAA made no changes to the AOP as a result of this comment.

K. OAC 1046 (Ethanol Unloading and Storage Project) states that QQQ and GGGa apply.

Response:

The Ethanol Unloading and Storage Project did not trigger 40 CFR 60 Subpart QQQ because the drains are not routed to the oily water sewer. OAC 1046 does not state that 40 CFR 60 Subpart QQQ applies; therefore, NWCAA did not include 40 CFR 60 Subpart QQQ in the AOP.

In the OAC introduction, OAC 1046 does state that the project is subject to the applicable portions of 40 CFR 60 Subpart GGGa. However, because the courts stayed the definition of “process unit” in 40 CFR 60 Subpart GGGa, the effective definition at this writing does not include storage tanks as a process unit or part of a process unit. Therefore, 40 CFR 60 Subpart GGGa does not apply to the Ethanol Unloading and Storage Project. See Statement of Basis Section 3.10.4 for further discussion.

NWCAA made no changes to the AOP as a result of this comment.

L. In the LDAR program, the exception for hydrogen compressors should be listed. (AOP Sections 6.2 and 6.3)

Response:

Regarding the LDAR exception for compressors in hydrogen service, NWCAA included it in the initial reference to the LDAR requirements in the draft AOP Section 5 for those process units that have compressors in hydrogen service (i.e., AOP Terms 5.5.10, 5.5.11, 5.5.20, 5.7.5, 5.7.14, 5.7.15, 5.7.25, 5.7.26). NWCAA made no changes to the AOP as a result of this comment.

M. The refinery took possession of the March Point Cogeneration Company cogeneration units in 2010. For 2010, the bulk of the greenhouse gas emissions from the cogeneration units was included with the refinery's emissions for 2010 and only a portion was attributed to MPCC in 2010. For 2011 and beyond, all greenhouse gases are included with the refinery's emissions.

Response:

NWCAA updated the Statement of Basis to reflect the correct attribution. Because this change does not affect the AOP, this is not a substantive change requiring NWCAA to conduct a second public notice period for the draft permit.

OTHER ISSUES

20. Use of Fossil Fuels Relative to Climate Change

Mary Manous (written comment at hearing April 30, 2014)

"The impacts of the burning of these fossil fuels (wherever they end up being burned) should not be ignored as they will impact us all through their impacts on the climate. Thank you (1, 2, 6)."

Laurie Rostholder, Seattle Raging Grannies (written comment received and performed at hearing April 30, 2014) - Carol McRoberts, Nell Maskell, Deejah Sherman-Peterson

"Verse Tune: Oh give me a home…
The Northwest is our home
And we don't want it blown
Up by trains carrying volatilve oil.
The tanks are so old
They can easily (easly) explode
We've seen how they kill and they maim.

Chorus Tune: Home home on the range…
Keep those trains far from us
Or better yet don't let them muss
Our climate up more
Let's show them the door
Keep the oil in the ground evermore.

Verse Tune: Oh give ma a home…
How can we let greed
So easily (easly) impede
Our right to a climate that's clean
The future looks bleak

Unless we can keep
Fossil fuels down where they belong.

Chorus Tune: Home home on the range…
Keep those trains far from us
Or better yet don't let them muss
Our climate up more
Let's show them the door
Keep the oil in the ground evermore.

Verse Tune: Oh give me a home…
This statement we make
Is strong not opaque
Clearly we fear for our lives
In the present and then
For our kids and their kin
Keep all that oil in the ground (1, 2, 6)."

Katherine Scott (letter received April 3, 2014)

"The most recent scientific studies on climate change have made it very clear that all the remaining fossil fuels currently buried in the earth must remain there if we are to avoid global catastrophe.

We have already seen record numbers of severe storms and freakish weather patterns in the last year, as well as major oil trucking accidents and train de-railings throughout North America.

At this point, rather than succumb to despair and admit that it's game over for the planet, we should put all of our efforts and resources into developing safe renewable energy sources. The technology is here; we lack only the political will.

We have been held hostage by the powerful, privileged and subsidized fossil fuel industry far too long. It's time for new policies and practices.

Approval of a permit for Shell Oil to release even more greenhouse gases into our atmosphere here and now would be insane.

Please heed the science and the evidence and deny this refinery's application for an Air Operating Permit. Together let's do what is necessary to phase out fossil fuels and move into a viable future (1, 2, 6)."

Deejah Sherman-Peterson (written comment at hearing April 30, 2014)

"I oppose a renewal of Shell's air operating permit and any construction permit that allows expansion of its facility (1, 2, 6).

This issue cannot be seen as just one of issuing a permit for one small pieces of the whole. The whole is that this company violates the Clean Air Act and greatly contributes to climate change (8).

I am a Raging Grannie because I <u>do</u> have three very young grandchildren. I am extremely concerned about the kind of world they will be living in even where we to stop using all fossil fuels at this moment. Those little children—like all others!—already have a chemical soup in their bodies that is unnatural and damaging.

Yes, Shell's refinery emissions have decreased to only (!!!) almost <u>3,000 TONS</u> of pollutants in 2013. Even with that amount of air pollution, Shell has still violated emissions laws (9). They do <u>not</u> practice a caring attitude for the Earth and its inhabitants. The Shell Company cares only for its profits.

My religious faith preaches 7 Principles. Our 7th Principle is "respect for the interdependent web of existence of which we are a part." Whether or not you subscribe to this belief, you – and all of us – have a moral obligation to all creatures on our beautiful planet.

What will your children and grandchildren remember you for?"

John Vieira (email received March 25, 2014)

"I appreciate of the opportunity to comment on Anacortes Shell Oil Refinery application for an Air Operating Permit.

We have to turn away from fossil fuels in any form and its processing. If we don't err on the side of caution and continue to harvest oil and process it and resulting in a precipitous global shift, we wouldn't be able turn the event around resulting in unknown consequences to our habitat and survival.

We simply have to start saying no to those who have no control over their ambitions and lust for more wealth. The men and women who are in leadership positions of power in this industry also face an audience that will not tolerate stopping their pursuit for fossil fuels. They and their audience's behavior model those of children who see no limits to their ambit. Parents have to take charge of these children to prevent the harm they will endure in the absence of parental wisdom. So we find ourselves today.

Now, our and your assignment is to be that adult and protect our habitat one step at a time. All of us must do so. We can't risk the future of our offspring by gambling that fossil fuels and their use wouldn't tip the planet in a direction that may make life a tragic event.

We have the knowledge to move on. So say no to the request for an Air Operating Permit."

Response:

Thank you for your comments.

The Northwest Clean Air Agency (NWCAA) appreciates the many comments expressing concern about the use of fossil fuels and their general contribution to climate change. However, the commenters did not identify any applicable requirement related to the use of fossil fuels in relation to climate change that NWCAA did not properly address in the AOP, and the NWCAA is not aware of any such applicable requirement.

Because the above comments have not identified any material errors or omissions in the draft AOP, NWCAA did not change the draft AOP.

21. Use of Alternatives to Fossil Fuel

Nontoxic algae fuel can replace fossil fuels. If an area the size of one-tenth of New Mexico were algae fuel greenhouses, we would never have to pump oil again. Also, there are financial incentives for solar panels in Washington State.

Response:

Thank you for your comment.

While we appreciate your concerns about the use of fossil fuels and potential alternatives, this issue is outside the scope of the renewal process of the Shell Puget Sound Refinery Air Operating Permit.

22. Impact to Community

Jodie Buller (written comment at hearing April 30, 2014)

"I live about 15 minutes from the refineries, on Swinomish land. On my way to this hearing I passed 3 tractors, a school bus, and a train. I'd like to advocate for common sense priorities and response to Shell's Puget Sound Refinery plans, specifically the Draft Air Operating Permit

We need to remember and prioritize our existing assets: agriculture and tourism when we make risk assessments. A fertile farming valley, below sea level, does need to pay close attention to the risks inherent in Shell's operations and expansion plans, as one of our region's largest greenhouse gas emitters.

Our existing assets: clean air, unpolluted soils and water, are essential to the industries we value: tourism and farming. The degradation of our air and environment on a daily basis, or through accidental disaster, is not a risk we can afford, financially or environmentally."

Nina Hinton (email received March 13, 2014)

"I grew up in this area. I am writing to show my concern that the Shell Puget Sound Refinery would be releasing such a huge combination of defined air pollutants by the Washington Administrative Code (WAC) (9). I have been talking to people within this community and we strongly feel that the Air Operating Permit will insure some safety for this beautiful Valley. We are blessed with some wonderful natural resources here that help our community be successful and it is because we protect and care about our land and home here. So I must insist that this draft be taken very seriously."

Barbara J. Jackson (letter dated March 14, 2014)

"I read with shock, horror, and deep concern, about the air pollutant potential of the Shell Puget Sound Refinery (9). The consequences to our region over time are beyond fully knowing – to our health and well-being, to the fertility of our verdant land, the safety of our rivers and streams, not to mention the possible climate effects. Children born into such polluted air and growing up in it would suffer life-long, life-threatening health problems, limiting length and quality of life and productivity (7, 9).

Big Money appears to be able to Buy whatever they want – to make more money – at the expense of human health and welfare – and even nature itself. That outrageous cost is too high!! It must not happen here in Skagit Valley! PLEASE insist on a public hearing, and widely publicize the date, time, and place (1, 2)! REQUIRE a full EIS and strickest operating regulations for Shell Puget Sound Refinery (4)! We are depending on you for the very air we breathe! Thank you for all you are doing to maintain, protect, and preserve our Clean Air Quality!"

Jennifer Keller (oral comment at hearing April 30, 2014)

"We are all living in their chemical experiment. So, really loving and taking care of the place where we live, this beautiful place that sustains us means, you know, paying careful attention as you do and I really appreciate the work you do to our air, water and soil. Each part needs to be seen in the context of the whole, real people and real animals depending on whether we get it. This is our one beautiful Earth. Thank you."

Response:

Thank you for your comments.

While we appreciate concerns about the impact of the general refinery operation on the community, this issue is outside the scope of the renewal process of the Shell Puget Sound Refinery Air Operating Permit (AOP).

Because the above comments have not identified any material errors or omissions in the draft AOP, NWCAA did not change the draft AOP as a result of these concerns.